CAPXON

ELECTROLYTIC CAPACITORS

ALUMINUM ELECTROLYTIC CAPACITORS

SOLID CONDUCTIVE POLYMER CAPACITORS

HYBRID CONDUCTIVE POLYMER CAPACITORS



CONTENT

WORLD OF CAPXON	Page
GENERAL INFORMATION	
About us	5
Overview Capacitor Technologies	6
Technology Comparison	7
FURTHER INFORMATION	
Certification	8
Smart Production	9
New Research	11
Component Reliability Data	12
Quality and Environmental Management	18
AEC-Q200 and Automotive Requirements	21
Lifetime Estimation ▪ Lifetime Compendium	22
Technical Notes ▪ Technical Compendium	23
Application Examples	24
Technical Terms	27

ALUMINUM ELECTROLYTIC CAPACITORS	Page
SMD TYPE	
Overview ▪ Selection Table	29
Datasheets	30
Product Code and Marking	88
Taping and Packaging	89
Dimensions and PAD Layout	91
Vibration Specifications	93
General Precautions and Guidelines	837
Soldering Specifications	843
RADIAL TYPE	
Overview ▪ Selection Table	95
Datasheets	97
Product Code and Marking	336
Taping	337
Packaging	345
Available Lead Treatments	349
General Precautions and Guidelines	837
Soldering Specifications	847

ALUMINUM ELECTROLYTIC CAPACITORS	Page
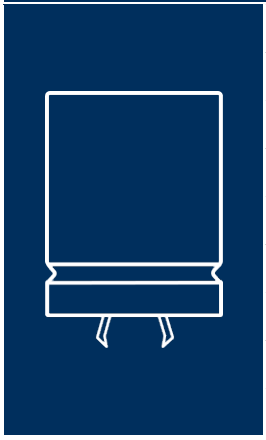 SNAP-IN TYPE	
Overview ▪ Selection Table	357
Datasheets	358
Product Code and Marking	579
Packaging	580
Available Terminals	581
Vibration Specifications	586
General Precautions and Guidelines	837
Soldering Specifications	847
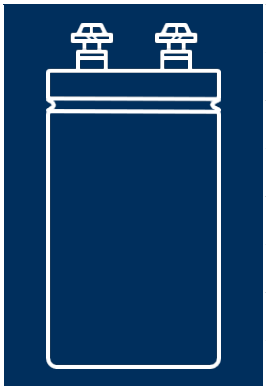 SCREW TERMINAL TYPE	
Overview ▪ Selection Table	588
Datasheets	589
Product Code and Marking	681
Dimensions and Available Terminals	682
Packaging	684
Accessories	686
General Precautions and Guidelines	837

SOLID CONDUCTIVE POLYMER CAPACITORS	Page
 STACKED TYPE	
Overview ▪ Selection Table	693
Datasheets	694
Product Code and Marking	698
Dimensions and PAD Layout	698
Taping and Packaging	699
General Precautions and Guidelines	837
Soldering Specifications	845
 SMD TYPE	
Overview ▪ Selection Table	702
Datasheets	703
Product Code and Marking	727
Taping and Packaging	728
Dimensions and PAD Layout	730
General Precautions and Guidelines	837
Soldering Specifications	844

For further information please contact sales@capxon.org

SOLID CONDUCTIVE POLYMER CAPACITORS	Page
	
RADIAL TYPE	
Overview ▪ Selection Table	732
Datasheets	733
Product Code and Marking	772
Taping	773
Packaging	779
Available Lead Treatments	781
General Precautions and Guidelines	837
Soldering Specifications	847

HYBRID CONDUCTIVE POLYMER CAPACITORS	Page
	
SMD TYPE	
Overview ▪ Selection Table	784
Datasheets	785
Product Code and Marking	806
Taping and Packaging	807
Dimensions and PAD Layout	809
Vibration Specifications	810
General Precautions and Guidelines	837
Soldering Specifications	846
	
RADIAL TYPE	
Overview ▪ Selection Table	812
Datasheets	813
Product Code and Marking	828
Taping	829
Packaging	833
Available Lead Treatments	835
General Precautions and Guidelines	837
Soldering Specifications	847

For further information please contact sales@capxon.org

10 FACTS ABOUT CAPXON

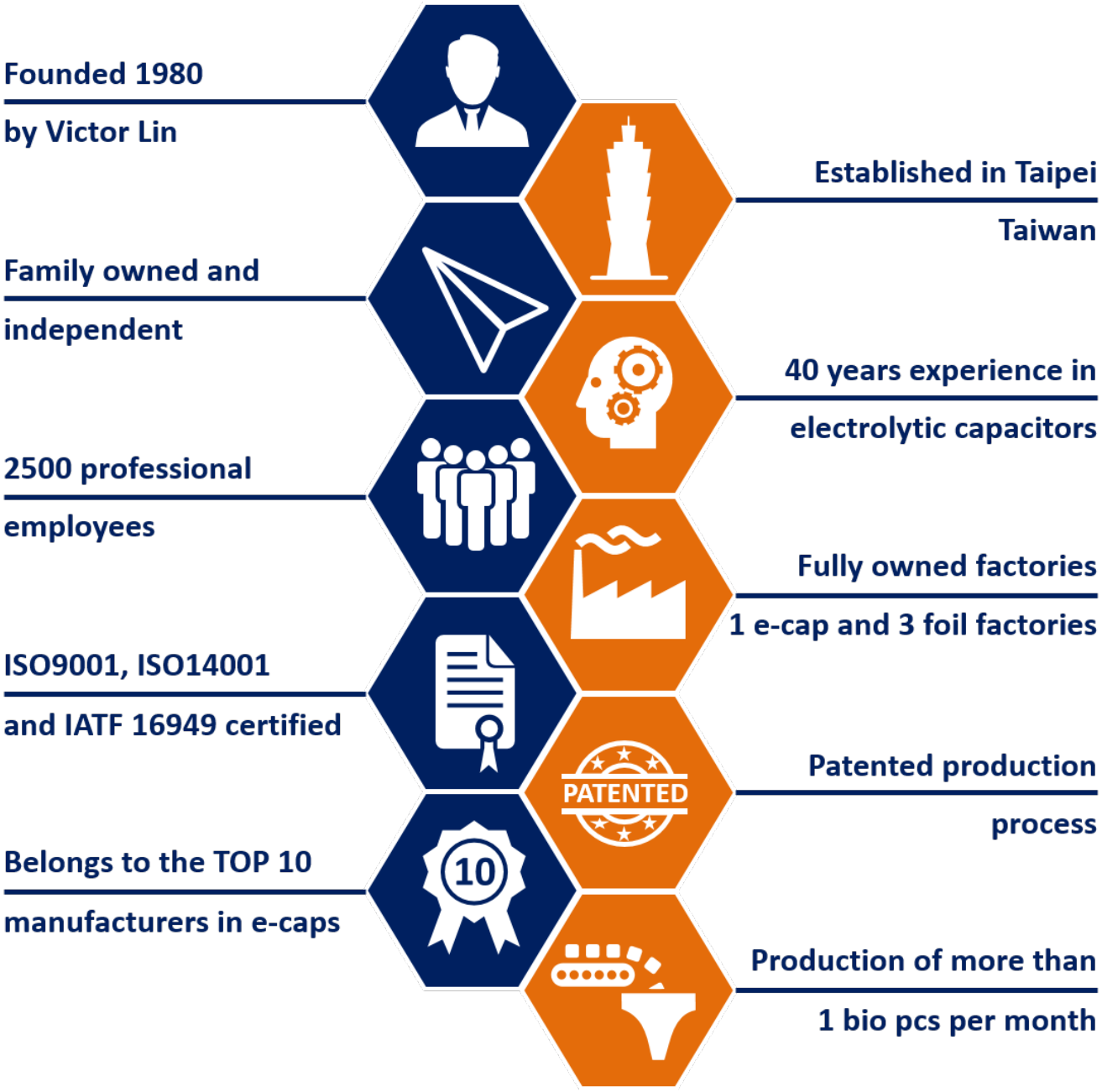

A WORLD OF ELECTROLYTIC CAPACITORS

CapXon's know-how in Electrolytic Capacitors covers technologies with aluminium foil. These are Aluminum Electrolytics, Solid Conductive Polymers and the combination known as Hybrid Conductive Polymers:

Aluminum Electrolytic	Description	Features
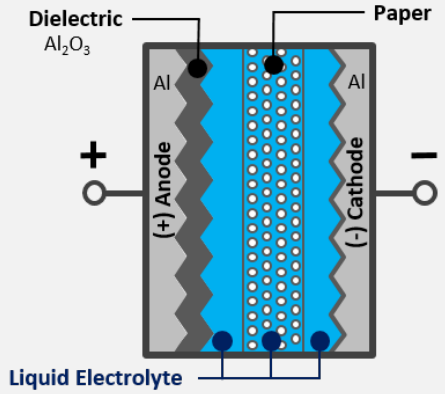	Rated Voltage ▪ V_R	4 VDC to 650 VDC
	Cathode Material	Liquid Electrolyte
	Self-healing of Dielectric	Yes
	Package	Widest range in all sizes
	Stability	Reduced performance at low temperature
	Lifetime	Limited life at high temperature
	Reliability	Automotive AEC-Q200 qualified

Solid Conductive Polymer	Description	Features
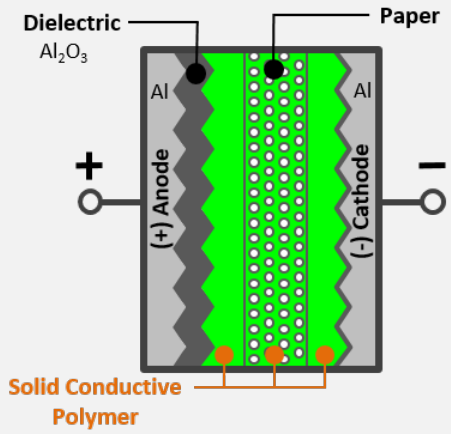	Rated Voltage ▪ V_R	2.5 VDC to 100 VDC
	Cathode Material	Solid Conductive Polymer
	Self-Healing of Dielectric	No
	ESR	Ultra-low ESR at high frequency
	Stability	Stable for low and high temperature
	Lifetime	Very stable and long life - no dry out
	Reliability	Only internal standard qualification

Hybrid Conductive Polymer	Description	Features
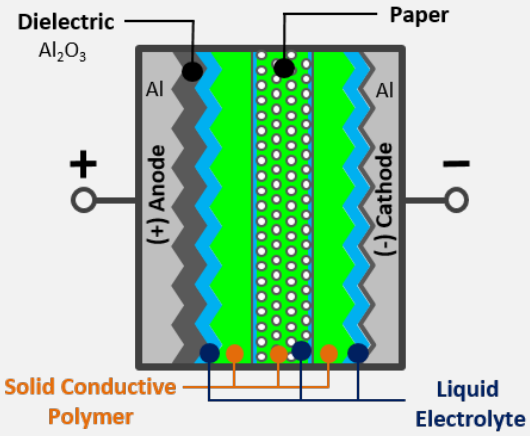	Rated Voltage ▪ V_R	16 VDC to 400 VDC
	Cathode Material	Solid Conductive Polymer & Liquid Electrolyte
	Self-Healing of Dielectric	Yes
	ESR	Very low ESR at high frequency
	Stability	Even more stable than liquid type
	Leakage Current ▪ I_{LEAK}	Lower leakage current than Solid Conductive Polymer Type
	Reliability	Automotive AEC-Q200 qualified

COMPARISON OF ELECTROLYTIC CAPACITOR TECHNOLOGIES

Characteristics	Aluminum Electrolytic Capacitor	Solid Conductive Polymer Capacitor	Hybrid Conductive Polymer Capacitor
ESR at High Frequency	● (120 ~ 1000 mΩ)	++ (7 ~ 15 mΩ)	+ (20 ~ 30 mΩ)
Leakage Current ▪ I_{LEAK}	++ ($0.01*C_R*V_R$)	● ($0.2*C_R*VR$)	++ ($0.01*C_R*V_R$)
Ripple Current ▪ I_R	● (~ 600 mA)	++ (2000 ~ 7000 mA)	+ (2000 ~ 3000 mA)
Rated Voltage ▪ V_R	++ (~ 700 V)	● (~ 100 V)	+ (~ 400 V)
Operating Temperature Characteristics	+ (-40 ~ + 125 °C)	+ (-55 ~ + 125 °C)	++ (-55 ~ + 150 °C)
Low Temperature Characteristics	● (-40 ~ + 125 °C)	++ (-55 ~ + 125 °C)	+ (-55 ~ + 150 °C)
Lifetime	● (105 °C / 3000h)	++ (105 °C / 5000h)	++ (105 °C / 10000h)
Failure Mode	+ Open	● Short	+ Open

++ ... best performance

\+ ... well performance

● ... basic performance

CERTIFICATION ACCORDING TO INTERNATIONAL STANDARDS

Quality, the environment, safety, and conservation of resources are the focus of our daily added value.

To meet the high requirements in the electronics industry, CapXon, as a global company, is certified according to the highest international standards. In this way, we ensure that all procedures and processes in our company are always structured and continuously optimized based on the valid and defined requirements.

CapXon is certified according to the following standards:



ISO 9001



ISO 14001



IATF 16949



ISO 50001



OHSAS 18001

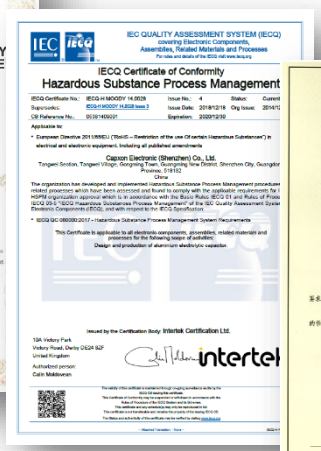

OC 080000



China RoHS

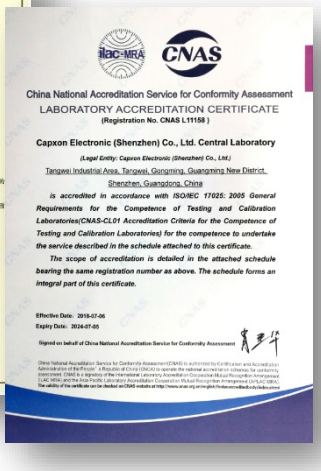

ISO/IEC 17025

For further information please contact sales@capxon.org

SMART PRODUCTION

Since 1980 CapXon focuses on research, development and manufacturing of Aluminum Electrolytic Capacitors and is a leading brand with its own capacitor production in Shenzhen and its own foil production in Yichang, Qinghai and Baotou. 40 years of experience give us a deep understanding of foil material, high performance electrolytes, advance lead wire technology, conductive polymer and electrochemical systems.

Precision equipment ensures the quality of key components





Capacitor production for all core technologies as Aluminium Electrolytic, Solid Conductive and Hybrid Conductive Polymer capacitors with R&D and Quality headquarters in Shenzhen

Development of our own production process and machinery with the highest grade of automated production equipment and software



For further information please contact sales@capxon.org

ADVANCED TECHNOLOGY

Only with the best production equipment and well-trained staff is it possible to maintain and expand the market position. Every year CapXon invests very large sums in machine, software and the education for our more than 2500 employees. To recognize deviation immediately during the production process, CapXon uses various precise inspection equipment.

All productions are qualified with strict specifications and every operation is monitored and measured at the machine





The products and the production meet the requirements of all industries even Medical or Automotive

Automated and full controlled manufacturing process



For further information please contact sales@capxon.org

NEW RESEARCH

Highly roughened and formed anode foils are the heart of every Aluminum Electrolytic Capacitor. CapXon has been conducting intensive research and development for decades to bring low-voltage and high-voltage films into new spheres and at the same time to optimize processability and durability. The electrolytes and conductive polymers used on the cathode side are subject to a continuous improvement process, taking commercial and technical aspects into account.

Electrolyte and polymer development to achieve maximum product reliability and a long life





High grade etching foil, high grade forming foil through consistent further development to the limit of what is technically feasible

Well-equipped ISO/IEC 17025: 2005 accredited laboratories for research, analysis and testing



COMPONENT RELIABILITY DATA

In this section, the main parameters for predictive reliability and availability calculations are explained and in which way CapXon can provide you with such data.

FAILURE RATE λ

The failure rate λ describes the frequency which components possibly fail. The failure rate describes how many defects can be expected, if you run the application in operation for a certain time.

The failure rate can be calculated as following:

(1) $$\lambda = \frac{n}{N*t}$$

n … Number of defect components

N … Number of tested components

t … Amount of operating hours

FAILURE CRITERIA

Capacitors will show certain wear-out phenomenon's by aging and so as times goes by the capacitors can possibly change their electrical performance.

As soon as the component is no longer fulfilling their electrical spec, stated features or with customer agreed parameters, the status of capacitor is seen as in failure mode or defect. This does not necessarily mean that the application will fail. An essential influence are the design and dimensioning by customer, which lead to major impact on possible failure modes and fail criteria for the application itself.

All given data by CapXon is just concerning the failure mode cases of the single component and is not representing the complexity of complete applications, assembled systems nor full electronic PCB boards.

BATHTUB CURVE

It's a widely used model within the reliability engineering to describe the expected failure rates over the whole application lifetime / product life cycle.

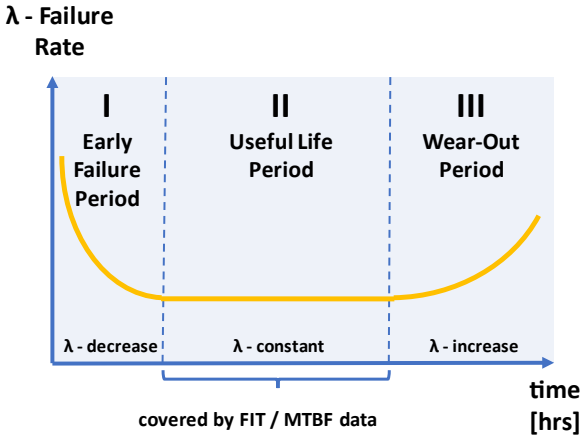

Bathtub curve

The Bathtub Curve states the failure rate behaviour within the three different product life cycle stages. These are the Early Failure Period, the Useful Life Period and the Wear Out Period.

With production control, monitoring and quality assurance, it is possible to reduce the early failures to a best possible minimum.

Failures within the Useful Life Period, which are described as FIT or MTBF value, are defined as events of coincidence and are not representing any systematic or epidemic failures.

FIT – FAILURES IN TIME

FIT - Failures In Time is the common way to describe the expected failure rate for electronics.

The FIT values describe certain failure rate within the useful life period and provides the basis for calculations, assumptions and extrapolation of reliability and availability to gather the understanding for expected failures / defects. These calculated figures are used to decide whether the component is a proper choice for the desired use case. Additionally, it need to be clarified whether redundancies are necessary and which redundancies are needed to fulfil the desired mission profile of an application.

The unit FIT defines the expected amount of failures per application hour.

(2) $$1\ FIT = \frac{10^{-9}}{h} = \frac{10^{-9} failures}{per\ operating\ hour}$$

So as higher the stated FIT value is, as higher the statistical chance of defect is.

For further information please contact sales@capxon.org

Please find the following example of a failure rate test determined by a useful life test:

- Number of failures n = 2
- Number of tested components N = 10 000
- Operating hours t = 20 000 h

$$(3) \quad \lambda = \frac{n}{N*t} = \frac{2}{10\,000*20\,000h} = 10\ FIT$$

$$(4) \quad 10\ FIT = \frac{10^{-8}}{h} = \frac{0.001\%}{1\,000h}$$

MTBF ▪ MEANTIME BETWEEN FAILURES

It's the predicted elapsed time between inherent failures of an electronic system during normal operation. The MTBF can be calculated as arithmetic mean / average time between failures of a system.

Assuming a constant failure rate, the MTBF can be easily calculated by reciprocal value of the Failure Rate λ**:**

$$(5) \quad MTBF = \frac{1}{\lambda}$$

MTBF is just a different way to describe the failure rate and can be easily converted to FIT and vice versa:

$$(6) \quad MTBF = \frac{10^9 h}{FIT} = \frac{114\,000\ years}{FIT}$$

$$(7) \quad FIT = \frac{10^9 h}{MTBF} = \frac{114\,000\ years}{MTBF}$$

The **MTBF** values are just covering the useful life period (flat middle section) of the bathtub curve. Because of this, a FIT or MTBF value can't be extrapolated to estimate the service lifetime for a component. FIT or MTBF values doesn't cover the higher failure rates of the wear-out period, where the expected failure rate would be higher due to occurring wear-out phenomenon's.

LIFETIME TESTS

Due to the fact that all electrolytic capacitors show aging behaviour and a possible drift of electrical parameters over usage time, lifetime tests are performed by manufacturers to describe the related reliability and performance of a certain capacitor. Different product series as well as the single product itself can provide very different lifetime performance. So, these test results are given to select the proper product in relation to the applied stress profile of application to gain the desired application performance within the whole product life cycle.

There are various names (e.g. Endurance, Load Life, Useful Life, Operational Life, Life Expectancy, Shelf Life, …) and different lifetime tests that are existing within the industry. Please kindly check the specific test specification and given data for the capacitor before design-in.

Sadly, there is no standardized naming and test criteria existing, given by any international accepted standard committee for all the lifetime tests, which are applied to electrolytic capacitors. Customers need to compare competitor products carefully with each other to see if test specifications are similar or different.

Please see particular datasheets for the specific test results and criteria of an individual product of CapXon.

Again, please note that the criteria of failure are given by the test specification limits of the dedicated lifetime test and as soon as a component is not fulfilling these given limits, it is rated as a failure. So, failure does not necessarily mean defect or breakdown of application. It is just describing that the drift of electrical performance is bigger than the checked limits of the particular test. It doesn't matter whether the measured C value is lower as the allowed test limit or the component is in a failure mode of open circuit, both cases are treated the same as a failure. Design and dimensioning of application will arrange how much drift of electrical parameters can be accepted for the individual capacitor. For example, when the rate of capacitance change is becoming critical within the application is defined by customer design. The lifetime tests are in place to provide a common and industry-wide comparable performance index of the capacitors.

As manufacturer, we can state and check how fast a drift of capacitance and further parameters will happen. Dimensioning within application design will set how long an error-free operation is possible. A proper dimensioning can enlarge the acceptable drift and so the lifetime performance. But be aware, if it is not done properly or component is overstressed, it also can shorten the expected lifetime performance. Please be aware to check dimensioning and drift estimation to assure your product performance for the desired lifetime. For support with lifetime estimations and dimensioning, we are pleased to support you and feel free to get in touch with our technical support.

In the following section CapXon's lifetime tests, which are performed with our products, are described in detail.

ENDURANCE

The Endurance test of the product checks the performance of its electrical parameters, such as capacitance change, leakage current and dissipation factor on their behaviour over time at a predetermined test setup of electrical stress and ambient condition.

Depending on the product series, the Endurance test is performed according to one of the settings below:

Setting 1 - applying Endurance test:

- max. Temperature
- V_R - Rated Voltage

Setting 2 - applying Endurance test:

- max. Temperature
- V_R - Rated Voltage
- I_R - Rated Ripple

Setting 1 is in accordance to the IEC 60364-4 / JIS 51001-4 test criteria and Setting 2 is enlarging the electrical stress setup with additional appliance of IR, to get a more representative result in comparison to possible real-life application stress.

The Endurance test is performed within product qualification at the stage of internal product validation and is repeated periodically for product requalification.

USEFUL LIFE

To get more representative understanding of lifetime performance for typical capacitor use, the useful life test represents such criteria.

The applied electrical stress is like the Endurance test - Setting 2. The test specification limits are wider as the endurance test specification, but as described the applied electrical stress stays similar. So, a larger acceptable drift of electrical parameters results in a larger expected lifetime. This represents the operational frame which is set by customer at dimensioning the capacitor specification for their application and the possible borders of an error-free operation.

Also, we state a FIT value related to the useful life test. These failure rate describes the deviation / possibility of occurrence of failures within the useful life period when the settings of useful life test are applied. This is related to the middle section of the bathtub curve the so-called useful life period (see above page 12 - Bathtub Curve of Product Reliability).

In the datasheet you will find the following phrase:

Failure Rate (during useful Life): 1%/1 000h with a confidence level of 60%. As a result, this is like a 10 000 FIT:

$$\lambda = \frac{1\%}{h} = 10\,000\ FIT = 10\,000\ failures * 10^{-9h}$$

Example:

If you have 8 000 components running in applications for 5 000 hours with the test conditions applied like the useful life test, you can estimate the number of components that show a higher drift as given by the useful life test spec borders as follows:

- Number of components N = 8 000
- Operating hours t = 5 000 h

$$\lambda = \frac{n}{N * t}$$

$$n = \lambda * N * t = \frac{1\%}{1\,000h} * 8\,000 * 5\,000h = 400$$

This means that when there are 8 000 pcs in operation for 5 000 hours at the maximum possible operating conditions (max. temp., V_R & I_R similar to useful life test criteria) an amount of 400 products (with a confidence level of 60%) can be expected to show a higher drift as given in the test spec.

SHELF LIFE

The shelf life test simulates the aging of the capacitor, if it is just stressed with ambient temperature without any electrical load. The shelf life is not defining the possible storage time of the capacitor but just to describe the aging situation before mounting / PCB assembly.

The Shelf Life test criteria shall be satisfied, if the capacitor was restored to 20°C and following a conditioning by voltage treatment in accordance with 4.1 of JIS 5101-4 was applied, before measuring the capacitor.

For further information please contact sales@capxon.org

LIFETIME TEST EXAMPLES

Example 1 **-** Useful Life, Endurance (Setting 1) and Shelf life tests of SMD types – HV Series:

Lifetime Test		
Endurance 105°C (V_R applied)	Test	2 000 hours
	ΔC/C	≤ ±30% of initial measured value
	tanδ	≤ 300% of initial specified value
	I_{Leak}	≤ the initial specified value
Shelf Life 105°C (None)	Test	1 000 hours
	ΔC/C	≤ ±30% of initial measured value
	tanδ	≤ 300% of initial specified value
	I_{Leak}	≤ the initial specified value
Resistance to Soldering Heat	The capacitors shall be kept on a hot plate maintained at 250°C for 30 seconds. After removing from the hot plate and restored at room temperature, they meet the characteristic requirements listed below	
	ΔC/C	Within ±10% of initial value
	tanδ	Less than specified value
	I_{Leak}	Less than specified value

Example 2 - of Useful Life, Endurance (Setting 2) and Shelf life tests of Radial types – GF Series

Lifetime Test			
Endurance 105°C (V_R & I_R applied)	Test	2 000 hours	ø D 5 ~ 6.3 mm
		3 000 hours	ø D 8 mm
		5 000 hours	ø D ≥ 10 mm
	ΔC/C	≤ ±20% of initial measured value	
	tanδ	≤ 200% of initial specified value	
	I_{Leak}	≤ the initial specified value	
Shelf Life 105°C (None)	Test	1 000 hours	
	ΔC/C	≤ ±20% of initial measured value	
	tanδ	≤ 200% of initial specified value	
	I_{Leak}	≤ the initial specified value	

Example 3 - of Useful Life, Endurance (Setting 2) and Shelf life tests of Snap In types – HU Series:

Lifetime Test		$V_R \leq 100V$	$V_R > 100V$
Useful Life 105°C (V_R & I_R applied)	Test	5 000 hours	8 000 hours
	ΔC/C	≤ ±30% of initial measured value	≤ ±20% of initial measured value
	tanδ	≤ 300% of initial specified value	≤ 200% of initial specified value
	I_{Leak}	≤ the initial specified value	≤ the initial specified value
Endurance 105°C (V_R applied)	Test	3 000 hours	
	ΔC/C	≤ ±15% of initial measured value	≤ ±10% of initial measured value
	tanδ	≤ 130% of initial specified value	≤ 130% of initial specified value
	I_{Leak}	≤ the initial specified value	≤ the initial specified value
Shelf Life 105°C (None)	Test	1 000 hours	
	ΔC/C	≤ ±15% of initial measured value	≤ ±10% of initial measured value
	tanδ	≤ 130% of initial specified value	≤ 130% of initial specified value
	I_{Leak}	≤ the initial specified value	≤ the initial specified value

Example 4 - Useful Life, Endurance (Setting 2) and Shelf life tests of Screw types – RK Series:

Lifetime Test		
Useful Life 105°C (V_R & I_R applied)	Test	4 000 hours
	ΔC/C	≤ ±45% of initial measured value
	tanδ	≤ 300% of initial specified value
	I_{Leak}	≤ the initial specified value
Endurance 105°C (V_R applied)	Test	2 000 hours
	ΔC/C	≤ ±15% of initial measured value
	tanδ	≤ 130% of initial specified value
	I_{Leak}	≤ the initial specified value
Shelf Life 105°C (None)	Test	1 000 hours
	ΔC/C	≤ ±15% of initial measured value
	tanδ	≤ 130% of initial specified value
	I_{Leak}	≤ the initial specified value

TELCORDIA SR-332

This industry-wide accepted standard provides data and tools for reliability predictions of components, devices or full hardware units of electronic equipment. Telcordia (formerly Bellcore). With the given figures and data, it is possible to assure system availability and to gather the desired system reliability.

FIT & MTBF DATA OF CAPXON PRODUCTS

CapXon provides FIT & MTBF values based on Telcordia SR332 standard for all components. From our perspective, it provides more reliable prediction because it is more specific and detailed than MIL-217 or Siemens SN 29500.

Please find the FIT values for CapXon components and application-based reliability prediction calculations on the following page.

The table of SMD / RADIAL / Snap-In is covering all Electrolytic Technologies – Liquid, Solid and Hybrid Electrolytic Capacitors in SMD & Radial.

The table of Screw capacitors is just concerning Liquid Aluminum Electrolytic Capacitors.

For further information please contact sales@capxon.org

Mounting Type	SMD / Radial / Snap-In					
Electrical Stress	100%		75%		50%	
Operating Temp. [°C]	λ [FIT]	σ [FIT]	λ [FIT]	σ [FIT]	λ [FIT]	σ [FIT]
≤ 30	1,19	0,28	0,65	0,15	0,36	0,08
35	1,52	0,35	0,84	0,19	0,46	0,11
40	1,94	0,45	1,06	0,25	0,58	0,14
45	2,45	0,57	1,34	0,31	0,74	0,17
50	3,07	0,71	1,68	0,39	0,92	0,22
55	3,82	0,89	2,10	0,49	1,15	0,27
60	4,72	1,10	2,59	0,60	1,42	0,33
65	5,80	1,35	3,19	0,74	1,75	0,41
70	7,09	1,65	3,89	0,91	2,14	0,50
75	8,61	2,01	4,73	1,10	2,59	0,60
80	10,40	2,42	5,71	1,33	3,13	0,73
85	12,50	2,91	6,86	1,60	3,76	0,88
90	14,94	3,48	8,20	1,91	4,50	1,05
95	17,78	4,14	9,76	2,27	5,35	1,25
100	21,05	4,90	11,55	2,69	6,34	1,48
105	24,82	5,78	13,62	3,17	7,47	1,74
110	29,13	6,78	15,99	3,72	8,77	2,04
115	34,05	7,93	18,69	4,35	10,26	2,39
120	39,65	9,23	21,76	5,07	11,94	2,78
125	45,99	10,71	25,24	5,88	13,85	3,23
130	53,15	12,38	29,17	6,79	16,01	3,73
135	61,20	14,25	33,59	7,82	18,43	4,29
140	70,24	16,36	38,55	8,98	21,15	4,93
145	80,34	18,71	44,09	10,27	24,20	5,64
150	91,60	21,33	50,27	11,71	27,59	6,43

Table 1: FIT values for SMD, Radial, Snap-In

Remark: Above values are only valid within the max. specified temperature range of the particular component. All given FIT data is meant for lifetime predictions only and is not representing any warranty.

For particular products (e.g. screw capacitors) within the datasheet, further FIT or MTBF data is added and in such a case, this substitutes the general information stated above.

Mounting Type	Screw terminal					
Electrical Stress	100%		75%		50%	
Operating Temp. [°C]	λ [FIT]	σ [FIT]	λ [FIT]	σ [FIT]	λ [FIT]	σ [FIT]
≤ 30	34,20	24,43	18,77	13,40	10,30	7,36
35	43,85	31,32	24,06	17,19	13,21	9,43
40	55,78	39,84	30,61	21,87	16,80	12,00
45	70,42	50,30	38,65	27,61	21,21	15,15
50	88,27	63,05	48,44	34,60	26,59	18,99
55	109,88	78,48	60,30	43,07	33,09	23,64
60	135,88	97,06	74,57	53,27	40,93	29,23
65	166,99	119,28	91,65	65,46	50,30	35,93
70	203,99	145,71	111,95	79,97	61,44	43,89
75	247,76	176,97	135,97	97,12	74,62	53,30
80	299,26	213,76	164,24	117,31	90,14	64,38
85	359,57	256,84	197,34	140,96	108,30	77,36
90	429,86	307,04	235,91	168,51	129,47	92,48
95	511,39	365,28	280,66	200,47	154,03	110,02
100	605,57	432,55	332,34	237,39	182,39	130,28
105	713,89	509,92	391,79	279,85	215,02	153,59

Table 2: FIT values for Screw types

λ - Mean Component Failure Rate

σ - Standard Deviation of Component Failure Rate

CALCULATION OF FIT VALUE FOR APPLICATION CASE

By using the given Telcordia SR-332 figures and by the assumption that the failure rate follows a gamma distribution, the FIT value can be calculated with given mean λ and standard deviation σ (see section tables in section 8.8) and desired UCL - Upper Confidence Level as follows:

$$\boldsymbol{shape\ \kappa = \left(\frac{\lambda}{\sigma}\right)^2}$$

$$\boldsymbol{scale\ \theta = \frac{\sigma^2}{\lambda}}$$

The desired FIT value for the application case is the P% quantile of the gamma distribution and it can be calculated by the inverse cumulative gamma distribution with the shape κ and scale θ parameters as follows:

$$\boldsymbol{\lambda_{P\%UCL} = G^{-1}(90/100; \kappa; \theta)}$$

If the shape κ parameter is >100 the FIT can also be calculated by using the P% quantile of the normal distribution, by inverse cumulative distribution of normal distribution with mean λ and standard deviation σ:

$$\boldsymbol{\lambda_{P\%UCL} = N^{-1}(P/100;\ \lambda; \sigma\ )}$$

Customer need to define which UCL is desired for the reliability prediction for their application case (typical values for UCL are e.g. 60%,90%, 95%, 99%).

CALCULATION EXAMPLE

Example 1:

GF Series – Radial type
Aluminum Electrolytic Capacitor

@ 70°C and 75% electrical stress
Upper Confidence Level (UCL) = 90%

Values according to table 1 at page 16:
λ= 3.89 FIT / σ= 0.91 FIT

$$\boldsymbol{shape\ \kappa = \left(\frac{3.89}{0.91}\right)^2 = 18.27}$$

$$\boldsymbol{scale\ \theta = \frac{0.91^2}{3.89} = 0.21}$$

$$\boldsymbol{\lambda_{90\%UCL} = G^{-1}(90/100; 18.27; 0.21) = 5.02\ FIT}$$

In Microsoft Excel you can solve this with the following formula:

International / American Excel Version:
=GAMMAINV(0.9,18.27,0.21)

European Excel Version:
=GAMMAINV(0,9;18,27;0.21)

Example 2:

RG Series - Screw type
Aluminum Electrolytic Capacitor

@ 60°C and 75% electrical stress
Upper Confidence Level (UCL) = 90%

Values according to table 2 at page 16:
λ= 74.57 FIT / σ= 53,27 FIT

$$\boldsymbol{shape\ \kappa = \left(\frac{74.57}{53.27}\right)^2 = 2.01}$$

$$\boldsymbol{scale\ \theta = \frac{0.91^2}{3.89} = 38.05\ FIT}$$

$$\boldsymbol{\lambda_{90\%UCL} = G^{-1}(90/100; 2.01; 38.05) = 148.57 FIT}$$

In Microsoft Excel you can solve this with the following formula:

International / American Excel Version:
=GAMMAINV(0.9,2.01,38.05)

European Excel Version:
=GAMMAINV(0,9;2,01;38,05)

For further information please contact sales@capxon.org

QUALITY MANAGEMENT SYSTEM

We are committed and living the principle of **QUALITY FIRST - to offer highly satisfying products and service to the customer**. This global aim is shared by the CapXon quality and environmental management system and part of our business philosophy:

QUALITY MANAGEMENT SYSTEM CERTIFICATION

In accordance with our quality commitment, CapXon quality management is certified by **ISO 9001** and **IATF 16949**. The certification covers our production plants as well as our sales organization. This standard is applied throughout the company and is used to implement, monitor and to proceed the CapXon quality policy in all process steps.

PRODUCT AND PROCESS QUALITY

Our product and process development follows the sequence and phases of **APQP – Advance Product Quality Planning:**

5 Phases of APQP



Quality tools such quality tools, including **5S, PDCA, FMEA, (DFMEA & PFMEA), MSA, APQP, PPAP, SPC** and others, are in place to minimize risks, provide constant monitoring and ensure continuous improvements in conjunction with regular internal audits and QM reviews.

QUALITY ASSURANCE

For our sample checks, we refer to **AQL - Acceptable Quality Level** figures, which are based on a random sampling plan in accordance with **MIL-STD-1916**. Referring to instructions of this standard, a delivered lot will be accepted with a probability of 90%, if the percentage of non-conformance does not exceed the stated AQL figure. As a general internal target, the percentage of non-conformance in deliveries from CapXon is significantly below the AQL figure. The acceptance value we apply to non-conform components is c= 0.

INCOMING GOODS INSPECTION BY CUSTOMER

We recommend applying planned random sampling checks in accordance with MIL-STD-1916 , is compliant with MIL STD 105 D and IEC 60410, for incoming goods inspection. The test methods, which shall be applied, are laid down in the relevant standards.

ENVIRONMENTAL MANAGEMENT

Environmental Policy

CapXon defines internally the following environmental **protection principles**:

- **comply with the given law & regulations**
- **observe and act to reduce pollution**
- **produce cleanly**
- **reduce the consumption and save resources**
- **cut down usage of toxic substances**
- **make continuous improvements**
- **protect the environment**

ENVIRONMENTAL MANAGEMENT SYSTEM CERTIFICATION

CapXon environmental management system is certified in accordance with ISO 14001 and is applied throughout the whole company as well as CapXon's environmental policy is implemented.

ENVIRONMENTAL HAZARDOUS SUBSTANCES FREE MANAGEMENT SYSTEM

To show our commitment to protect the environment and people, CapXon drives a sustainable effort to produce environment-friendly products.

IECQ QC 080000 HSPM - Hazardous Substance Process Management, which is based on the quality management system of ISO 9001.

The CapXon QC080000 based HSF management system is company-wide applied for implementing the CapXon environmental Hazardous Substances management and that CapXon products effectively in the management of hazardous substances.

ENERGY MANAGEMENT SYSTEM

CapXon establishes comprehensive energy use management in accordance with the requirements of ISO 50001 Energy Management System in order to meet the social responsibility of low carbon environmental protection and efficiency

CERTIFICATION IN ACCORDANCE TO ISO 14001, ISO 50001, QC 080000

The CapXon Group operates an environmental management system that conforms to the requirements of **ISO 14001** and is mandatory for all plants. The CapXon Group operates an Energy management system that conforms to the requirements of **ISO 50001** and is mandatory for all plants. The CapXon Group operates an environmental **Hazardous Substances Free management system** that conforms to the requirements of QC 080000 and is mandatory for all plants. The company certificate is posted on the CapXon internet: (www.capxongroup.com).

RoHS COMPLIANCE

The abbreviation **RoHS** is usually **called Restriction of Hazardous Substances**, the full term is the short term for the **Directive on the restriction of the use of certain hazardous substances in electrical and electronic equipment** and is referring to the EU directive 2011/65/EU. The RoHS 2 – 2011/65/Eu substituted the former RoHS 1- 2002/95/EC.

The aim of RoHS is to banish Hazardous Substances of electronic waste, which can harm the environment and others. Based on this regulation, we as component manufacturer, need to design, observe and control that such hazardous materials are fully avoided and reduced to the max. Morever, it's possible to replace them by adequate non concerned materials within the given limitations .

For all by RoHS scoped materials (excluding exempt products) the maximum permitted concentrations are:

all concerned materials (except Cd)

- 0,1% / 1000ppm

Cadmium -Cd:

- 0,01% or 100ppm

These limitations for the restricted materials focus on each homogeneous material within the product. So, the limitations are concerning each individual / single substance or part, which can be separated mechanically (e.g. aluminum can, rubber sealant) and are not apply to the weight of the whole component itself.

Last update of RoHS was Directive (EU) 2015/863, which was published on 2015-03-31 and implemented by 2019-07-22. According to this directive, the following ten substances are restricted:

- **Pb** - Lead
- **Hg**- Mercury
- **Cd** - Cadmium
- **Cr^{+6}** - Hexavalent chromium
- **PBB** - Polybrominated biphenyls
- **PBDE** - Polybrominated diphenyl ether
- **DEHP** - Bis (2-ethylhexyl) phthalate
- **BBP** - Butyl benzyl phthalate
- **DBP** - Dibutyl phthalate
- **DIBP** - Diisobutyl phthalate

By the update DEHP, BBP, DBP and DIBP were added to the list of hazardous substances.

Since 2011 RoHS compliance is mandatory to be able to get CE approval.

C-RoHS / CHINA RoHS COMPLIANCE

The common speech so called China RoHS means the conformance to **SJ/T 11363-2006** for electronical components and assemblies and is fully called **Administrative Measure on the Control of Pollution Caused by Electronic Information Products**.

In China RoHS, the following substances are banned because they are considered as environmentally hazardous:

- **Pb** - Lead
- **Hg**- Mercury
- **Cd** - Cadmium
- **Cr^{+6}** - Hexavalent chromium
- **PBB** - Polybrominated biphenyls
- **PBDE** - Polybrominated diphenyl ether

Since December 2012, CapXon has provided China RoHS certification for our products and certifications.

SONY GP CERTIFICATION

Since Nov 2011, CapXon has been certified as Green Partner by SONY and we are running an environmental management system that continuously meet the requirements of the SONY Green Partner Program and we are working in

accordance with the Sony environmental quality assurance. The Certificate is listed by **SONY GP Certificate No.: FC012746**

REACH CERTIFICATION

REACH is the abbreviation for Registration, Evaluation, Authorization of Chemicals and by Regulation (EC) No 1907 /2006 it is

So each manufacturer or importer, who is shipping goods to the European Union, need to declare and be compliant according to REACH, if within the shipped goods a substance, which is listed out SVHC-List (Substances of Very High Concern) is included and overall a total mass of bigger a ton per year is imported.

CapXon is working in accordance with REACH requirements and certification is available for our products.

ROHS & REACH MARKING

Within our datasheets, we mark the RoHS and REACH compliance with our "RoHS & REACH compliant"- marking, please see marking below for reference:



HALOGEN FREE (HF)

The Halogen Free requirements are based on customer and environmental regulations on management and control requirements of halogens, such as the **European Directive 2002/95/EC**, **IEC 61249-2-21**, **Montreal Protocol on Substances that Deplete the Ozone Layer and Controls the Stockholm joint pledge about durable organic pollutant**.

Concerned by the halogen-free initiative are elements like:

- **Fluorine**
- **Chlorine**
- **Bromine**
- **Iodine**
- **Astatine**

In case of fire, these elements can release toxic fumes, which could harm humans and can also cause corrosion of metals.

CapXon is using halogen-free materials for all our electrolytic capacitors. Since 31st of Oct 2009 all products meet the halogen-free requirements.

BANNED AND ENVIRONMENTAL HAZARDOUS SUBSTANCES IN COMPONENTS

As a manufacturer of passive components, we develop our products focussing on sustainability. In order to guarantee a standardized procedure within CapXon, a mandatory avoidance list of Environmental Hazardous Substances with special interest is part of our environmental management system. The planning and development instructions include regulations and guidelines that aim to identify environmental aspects and to optimize products as well as processes with respect to material usage and environmental compliance to design them with sparing use of resources and to substitute hazardous substances as far as possible.

The environmental officer provides support in the assessment of the environmental impacts of our development projects and as part of our environmental management these aspects are checked and recorded in internal design reviews.

AEC-Q200 & AUTOMOTIVE REQUIREMENTS

To serve the high standards of automotive applications, CapXon provides AEC-Q200 versions for many of their product series.

If AEC-Q200 version is available, the product series or single component is marked with the following marking on the datasheet:



Mmarking of components with references in reliability testing to AEC-Q200

The AEC-Q200 versions are different in case of reliability testing, production monitoring and available material declaration. For details, please see the table below:

	Standard Version	AEC-Q200 Version
Reliability Testing		
Tests according to **internal specification**	✓	✓
Tests according to **AEC-Q200** applied test range related to product	✗	✓
Production Monitoring		
Production & documentation in accordance with **ISO 9001**	✓	✓
Production & documentation in accordance with **IATF 16949**	✗	✓
Compliance and Declarations		
RoHS & **REACH** compliance	✓	✓
IMDS entry available (on request)	✗	✓
PPAP (on request)	✗	✓

Table 9: Differences between standard and AEC-Q200 components

AEC-Q200

The AEC-Q200 was issued as a global reliability test standard by the AEC - Automotive Electronics Council. The overall aim of this standard is to define the minimum stress test driven qualification requirements and references of test conditions for qualification of passive components.

AEC-Q200 qualified components are highly qualified products for critical surroundings and can withstand the harsh and challenging usage conditions of an automotive environment.

For Aluminum Electrolytic Capacitors, concerning all technologies of Liquid Aluminum Electrolytic, Solid and hybrid types, the AEC-Q200 claims a test plan of 27 different reliability tests (e.g.: Temperature Cycling, Vibration, Biased Humidity, Surge Voltage, …) with a sample size of about 77 pcs. and a maximum test duration of particular test of about 1000 hours.

By AEC-Q200 at least the temperature range of -40°C to 105°C need to be tested and applicable for Aluminum Electrolytic Capacitors, if not, differently specified by datasheet.

In case of AEC-Q200 version, reliability testing is performed for the dedicated components in addition to CapXon's internal qualification setup as well as additional agreed requirements between CapXon and their customers.

PPAP

PPAP – Production Part Approval Process is a documentation to assure quality of supplier and their production process within the automotive supply chain.

The PPAP covers and ensure the following aspects:

- Manufacturability and meeting all given quality requirements
- Design records and specification requirements
- Manufacturing process can consistently meet all component requirements

For our AEC-Q200 components, we provide PPAP Level 3 on request, which is providing product samples as well as the complete supporting data.

IMDS

The IMDS – International Material Database System contains information about the used materials within the build-up of the component.

With IMDS, it is possible to monitor and control hazardous substances and prohibited substances down to the single component. IMDS is mainly used to fulfil various reporting requirements of automotive manufacturers.

For all our AEC-Q200 components and in case of an automotive use case, we provide IMDS entries on request. For further information, visit our website http://www.capxongroup.com/en/ or contact CapXon directly.

LIFETIME ESTIMATION ▪ LIFETIME COMPENDIUM

The accurate estimation of the lifetime of components is one of the elementary considerations of any electronic assembly. If electrolytic capacitors are not properly designed for the application environment and load, they will inevitably lead to a disproportionate change in their electrical performance or, in the worst case, failure of the capacitor. CapXon's lifetime compendium helps users to calculate and estimate the expected lifetime of **Aluminum Electrolytic Capacitors**.

The lifetime compendium is available to download from our website
http://www.capxongroup.com/files/Lifetime%20Compendium_EN.pdf

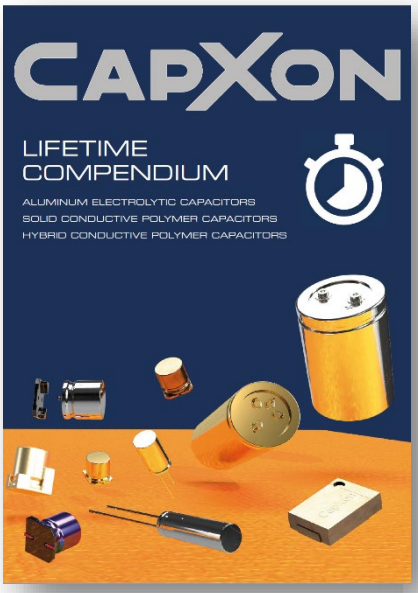

Content



Technical Background

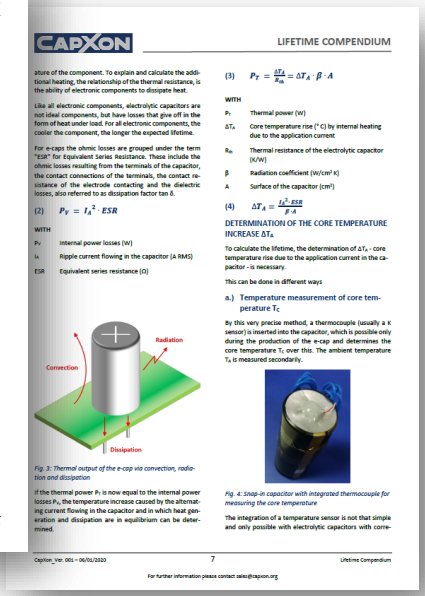

Calculation base

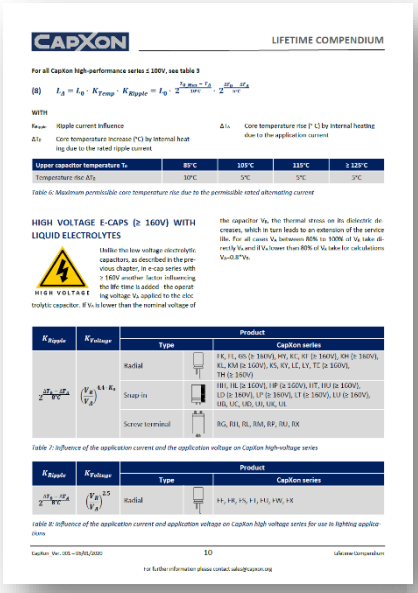

Application example

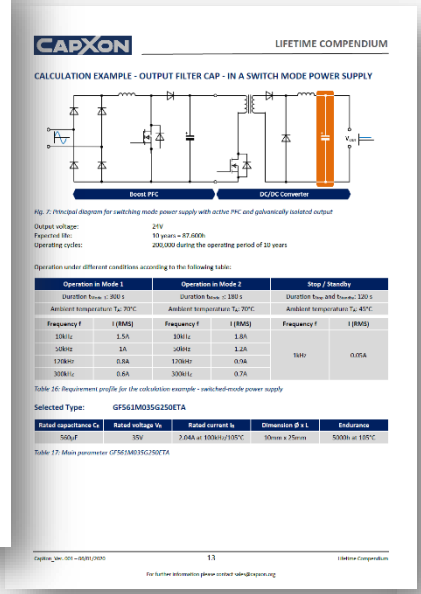

Graphical estimation

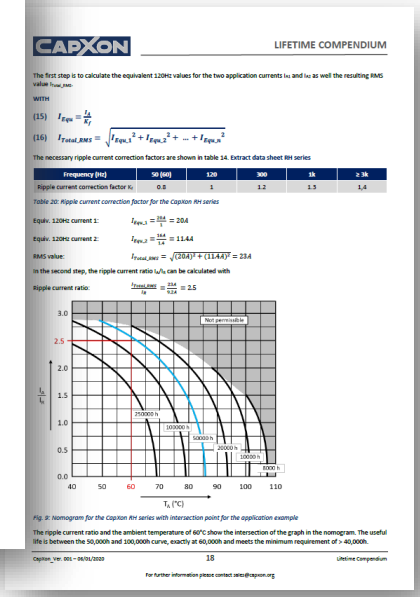

TECHNICAL NOTES ▪ TECHNICAL COMPENDIUM

Due to their compact design, **Aluminum Electrolytic Capacitors** are the most common high-capacitance storage and filter elements in electronics. Like all electronic components, they do not have an "ideal" electrical behavior, they have losses. Their properties are very dependent on temperature and frequency. Detailed knowledge of these components is an absolute must for all electronics developers, especially for power supplies and converters.

The CapXon Technical Compendium describes the basics, electrical parameters, production steps, provides suggestions for the selection of suitable capacitors and design rules for reliable and long-lasting operation.

The technical compendium is available to download from our website
http://www.capxongroup.com/files/Technical%20Compendium_EN.pdf

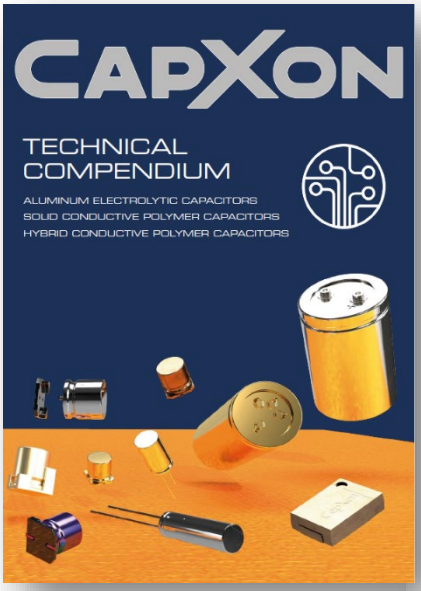

Basics

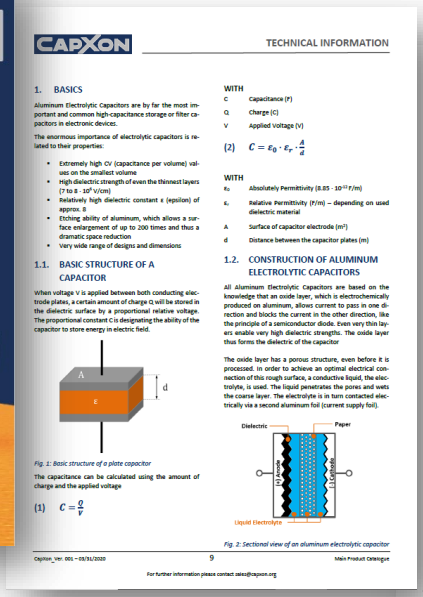

Production steps

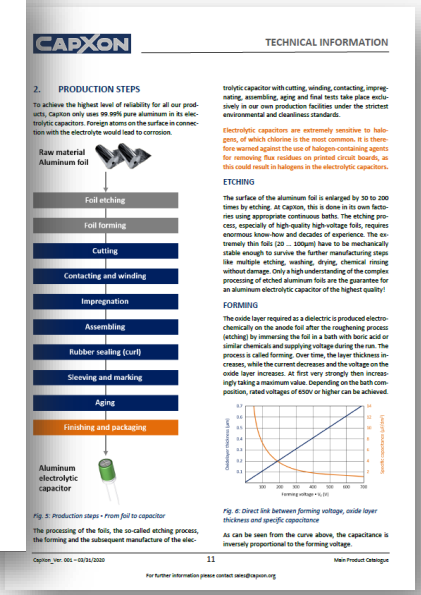

Electrical parameters

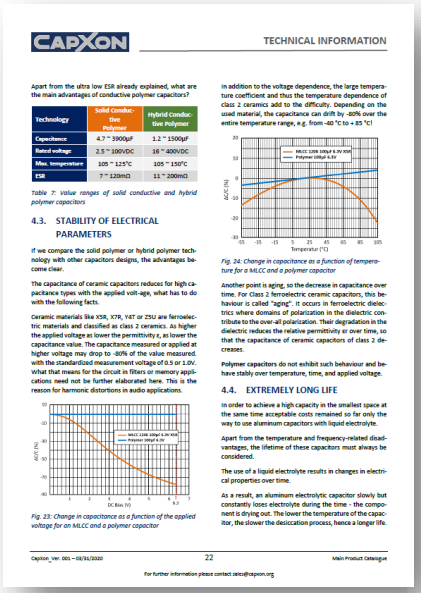

Capacitor selection

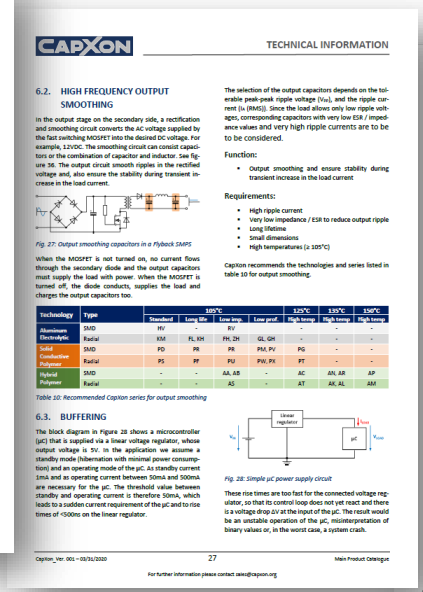

Design rules

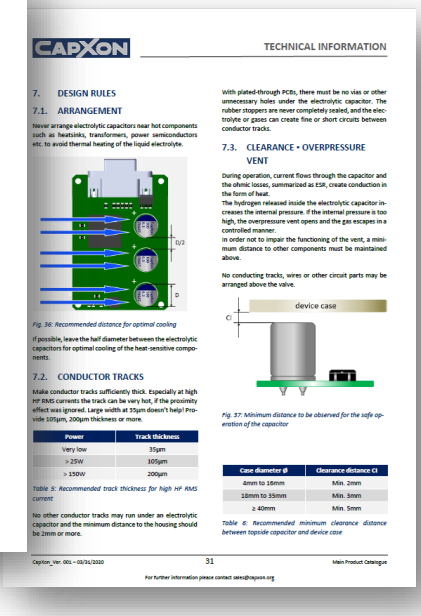

SWITCH MODE POWER SUPPLY (SMPS)

Example of a Switch Mode Power Supply with boost Power Factor Correction (PFC) and downstream DC/DC converter in Fly-back topology with recommended products.

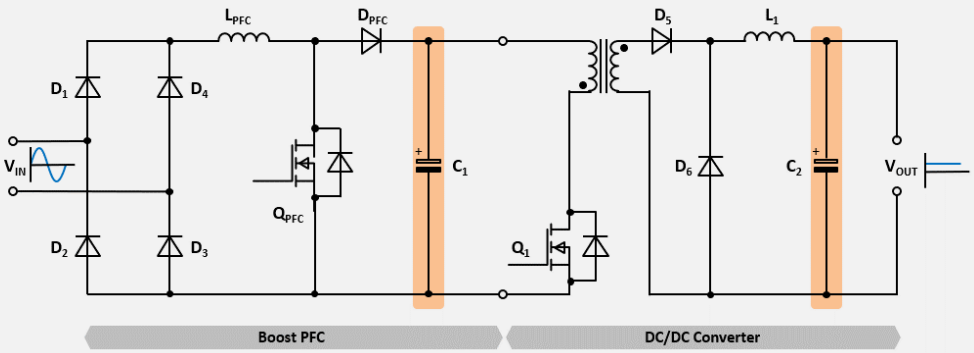

Designation	Circuit	Purpose	Specification	Series	Part Number
C_1	Boost PFC	Inductor ripple current filtering	100µF; 400V; 105°C; Radial; 2000h D18xL31.5mm; 0.53A@120Hz	KM	KM101M400K315A
C_1	Boost PFC	Inductor ripple current filtering	470µF; 450V; 105°C; Snap-In ; 5000h D35xL45mm; 1.94A@120Hz	HP	HP471M450P450A
C_2	DC/DC Converter	Output filtering	470µF; 25V; 105°C; SMD; 2000h D10xL10.5mm; 0.65A@100kHz	DV	DV471M025G105A
C_2	DC/DC Converter	Output filtering	1000µF; 25V; 105°C; Radial; 10000h D13xL20mm; 1.91A@100kHz	FH	FH102M025I200A
C_2	DC/DC Converter	Output filtering	82µF; 25V; 105°C; Radial; 2000h D8xL11.5mm; 4.1A@100kHz	PS	PS820M025F115A

INDUSTRIAL MOTOR DRIVE

Example of a typical industrial motor drive for pumps, fans or compressors. The power circuit consist input rectifier, Power Factor Correction (PFC), DC link bank and 3-phase IGBT power stage. CapXon offers the full range of DC link solutions in electrolyte technology

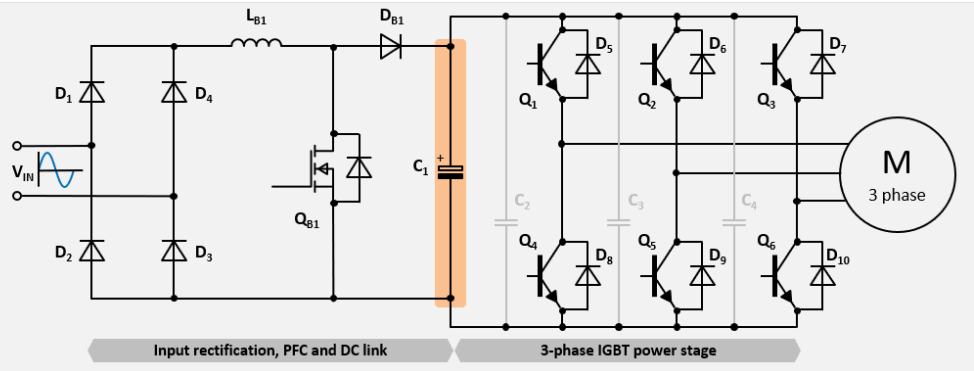

Designation	Circuit	Purpose	Specification	Series	Part Number
C_1	DC link bank	Energy storage and supply	560µF; 450V; 85°C; Snap-In; 7000h D30xL50mm; 3.17A@120Hz	UC	UC561M450O500A
C_1	DC link bank	Energy storage and supply	470µF; 500V; 85°C; Snap-In; 10000h D35xL55mm; 2.99A@120Hz	UD	UD471M500P550A
C_1	DC link bank	Energy storage and supply	680µF; 450V; 105°C; Snap-In; 8000h D35xL60mm; 2.94A@120Hz	UK	UK681M450P600A
C_1	DC link bank	Energy storage and supply	680µF; 450V; 105°C; Snap-In; 10000h D35xL55mm; 3A@120Hz	UL	UL821M450Q550A

PHOTO VOLTAIC INVERTER

Block diagram of the power circuit of a photo voltaic inverter with EMC filter, monitoring circuit, step-up converter, bridge circuit, and mains relay with recommended products.

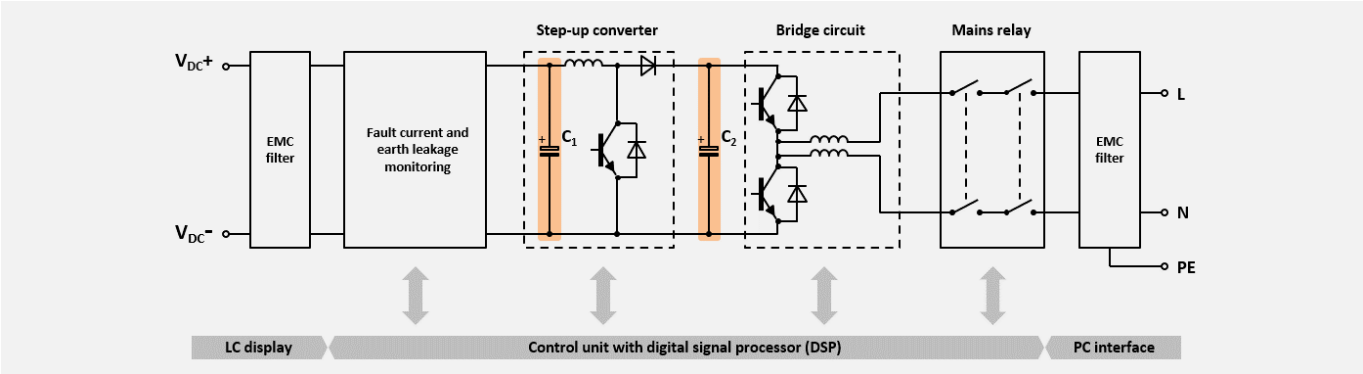

Designation	Circuit	Purpose	Specification	Series	Part Number
C_1, C_2	Step-up + DC link	Energy storage and supply	680µF; 500V; 105°C; Snap-In; 5000h D40xL60mm; 3A@120Hz	UJ	UJ681M500Q600A
C_1, C_2	Step-up + DC link	Energy storage and supply	5600µF; 450V; 105°C; Screw; 20000h D63.5xL165mm; 21.7@120Hz	RX	RX562M450SA65A
C_1, C_2	Step-up + DC link	Energy storage and supply	470µF; 450V; 105°C; Snap-In; 10000h D30xL50mm; 1.97A@120Hz	UL	UL471M450O500A
C_1, C_2	Step-up + DC link	Energy storage and supply	1000µF; 450V; 105°C; Screw; 8000h D51xL80mm; 4.6A@120Hz	RH	RH102M350R800A

3-PHASE HIGH VOLTAGE BATTERY CHARGER

Principal circuit of a 3-phase high voltage battery charger for bidirectional applications such as electric vehicle charging (e-cars, fork-lift trucks, transport vehicles with recommend products for the active rectifier and output filter.

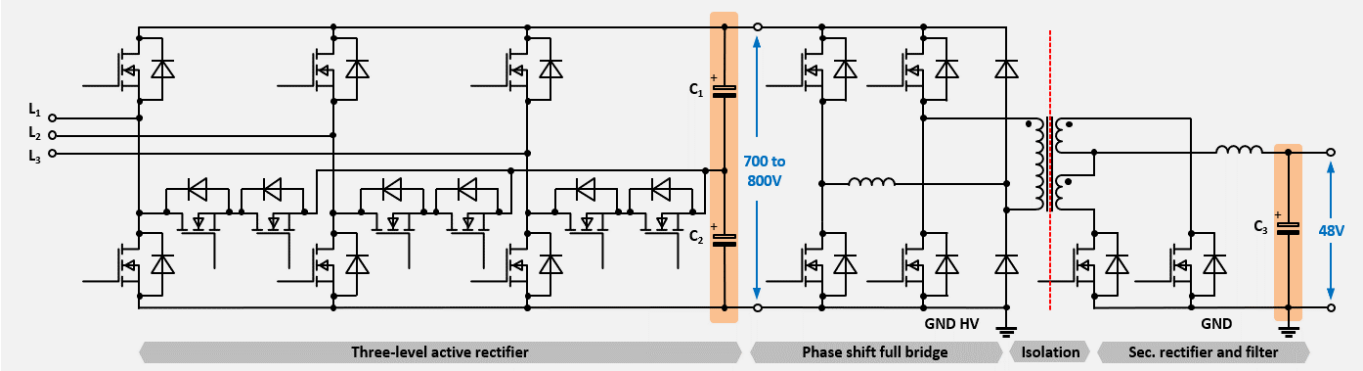

Designation	Circuit	Purpose	Specification	Series	Part Number
C_1 ,C_2	Three-level active rectifier	Energy storage and supply	2200µF; 450V; 85°C; Snap-In; 7000h D45xL90mm; 8.5A@120Hz	UC	UC222M450V900A
C_1 ,C_2	Three-level active rectifier	Energy storage and supply	1000µF; 500V; 105°C; Snap-In; 5000h D40xL80mm; 4.68A@120Hz	UJ	UJ102M500Q800A
C_3	Output filter	Output buffering and ensure stability	56µF; 63V; 105°C; Radial; 10000h D10xL12.5mm; 2.4A@100kHz	AS	AS560M063G125PTA
C_3	Output filter	Output buffering and ensure stability	150µF; 63V; 105°C; Radial; 2000h D10xL18mm; 3A@100kHz	PH	PH151M063G125PTA

27W PORTABLE POWER USB-C ADAPTER

Example of a portable power adapter for USB-C laptops, smartphones and tablets with recommend products for the LC filter and to ensure stability (smoothing) during transient increase in the load voltage.

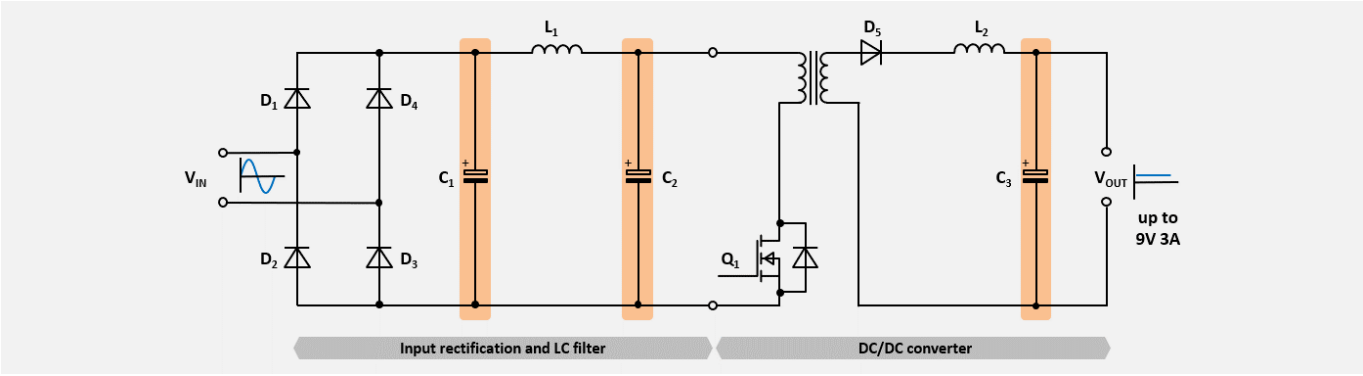

Designation	Circuit	Purpose	Specification	Series	Part Number
C_1 ,C_2	LC filter	Input filtering	22µF; 400V; 105°C; Radial; 2000h D10xL25mm; 0.125A@120Hz	KM	KM220M400G250A
C_1 ,C_2	LC filter	Input filtering	15µF; 400V; 105°C; Radial; 5000h D10xL20mm; 0.24A@120Hz	KF	KF150M400G200A
C_3	DC/DC converter	Output filtering	470µF; 16V; 105°C; Radial; 2000h D5.5xL11mm; 2.69A@100kHz	PX	PX471M016C090P
C_3	DC/DC converter	Output filtering	330µF; 12V; 105°C; Radial; 2000h D5xL9mm; 2.69A@100kHz	PX	PX331M012C090P

AUDIO SPEAKER

Example of an active audio speaker with treble and bass and the recommend products for the NF filter as well as the acoustic coupling.

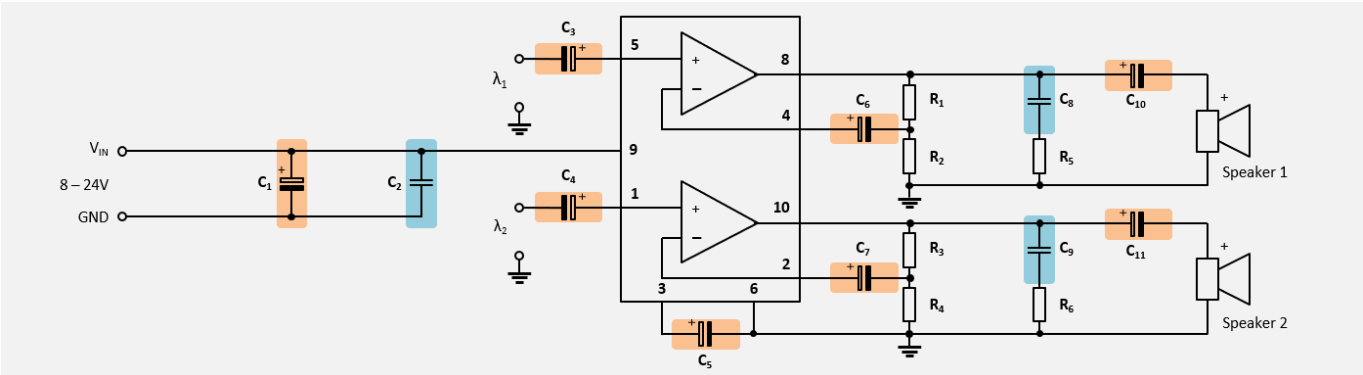

Designation	Circuit	Purpose	Specification	Series	Part Number
C_1 ,C_3 ,C_4 ,C_5 C_6 ,C_7 ,C_{10} ,C_{11}	Audio speaker	NF filter	470µF; 35V; 85°C; Radial; 2000h D10xL16mm; 0.63A@120Hz	RW	RW471M035G160A
C_2 ,C_8 ,C_9	Audio speaker	Acoustic coupling	47µF; 35V; 85°C; Radial; 2000h D10xL12.5mm; 0.15A@120Hz	NR	NR470M035G125ETA

TECHNICAL TERMS

Item	Description	SI units
V_R	Rated voltage	V
V_S	Surge voltage	V
V_{Ripple_AC}	Ripple voltage	V
$V_{Reverse}$	Reverse voltage	V
V_A	Application voltage, operating voltage	A
I_R	Rated ripple current, rated alternating current	A
I_A	Application current, operating current	A
I_{A_Max}	Maximum application current, maximum operating current	A
I_{Leak}	Leakage current	A
T_{0_Max}	Upper category temperature	°C
T_{0_Min}	Lower category temperature	°C
T_A	Application temperature, operating temperature	°C
T_S	Capacitor surface temperature	°C
ΔT_0	Core temperature increase by internal heating due to rated ripple current	°C
ΔT_A	Core temperature increase by internal heating due to application ripple current	°C
C_R	Rated capacitance	F
ΔC	Capacitance tolerance	%
C/C_R	Capacitance drift	-
tan δ	Dissipation factor	-
Z	Impedance	Ω
ESR	Equivalent series resistance	Ω
ESL	Equivalent series inductance	H
X_C	Capacitive reactance	Ω
X_L	Inductive reactance	Ω
f	Frequency	Hz
ω	Angular frequency	Hz
λ	FIT = failure in time	-
K_f	Multiplier for ripple current vs. frequency	-
K_T	Multiplier for ripple current vs. temperature	-
K_0	Dielectric constant derating coefficient at high temperature	-
L_0	Specified lifetime at max. capacitor temperature, rated voltage (and rated ripple current)	h
L_A	Expected lifetime at application conditions	h

Aluminum Electrolytic Capacitors

SMD Types



OVERVIEW ▪ SMD ALUMINUM ELECTROLYTIC CAPACITORS

Features



Series	Page	AEC-Q200	Bi-Polar	High Temperature	High Voltage	Long Life	Low ESR	Low Leakage	Standard	Ultra Long Life	Ultra Low ESR	Vibration Proof	Temperature Range (°C)		Voltage Range (V)		Capacitance Range (µF)		Endurance (hours)
KV	30							●					-40	+85	6.3	50	0.1	330	1000
NV	34		●										-40	+85	6.3	50	0.1	560	2000
LV	38	●			●				●			●	-40	+85	4	450	0.1	6800	2000
EV	46	●							●			●	-55	+105	6.3	50	0.1	1500	1000
HV	51	●			●	●						●	-55	+105	6.3	100	0.1	6800	2000
													-40		160	450	2.2	68	
JV	59	●				●						●	-55	+105	6.3	50	0.1	1000	3000
DV	63	●					●					●	-55	+105	6.3	100	1	6800	2000 to 5000
RV	70	●									●	●	-55	+105	6.3	100	1	6800	2000 to 5000
													-40		160	450	2.2	68	
MV	76									●			-40	+105	6.3	50	0.1	1000	5000
CV	80	●								●	●	●	-40	+105	6.3	50	22	1500	7000
TV	84	●		●								●	-40	+125	10	450	1	330	1000 to 2000

For further information please contact sales@capxon.org

KV SERIES ▪ LOW LEAKAGE 85°C TYPE



KEY FEATURES

LOW LEAKAGE

- **ALUMINUM ELECTROLYTIC CAPACITOR** ▪ SMD type
- Endurance: 85°C ▪ 1000 hours
- Low leakage current, $I_{LEAK} \leq 0.002 \cdot C_R \cdot V_R$ or 0.4µA
- Small dimensions
- Ideal for high density mounting

HF Halogen Free · MSL 1 · RoHS & REACH COMPLIANT

SPECIFICATIONS

Items		Performance Characteristics						
Operating Temperature Range		-40 ~ +85°C						
Rated Voltage Range	V_R	6.3 ~ 50V DC						
Surge Voltage	V_S	$V_S = 1.15 \cdot V_R$						
Capacitance Range	C_R	0.1 ~ 330µF						
Cap. Tolerance	ΔC	±20% (120Hz ▪ 20°C)						
Leakage Current (20°C ▪ V_R applied)	I_{LEAK}	≤ $0.002 \cdot C_R \cdot V_R$ or 0.4µA, whichever is greater ▪ After 2 minutes [I_{LEAK} (µA) ; C_R (µF) ; V_R (V)]						
Dissipation Factor % (20°C ▪ 120Hz)	tanδ	V_R (V DC)	6.3	10	16	25	35	50
		tanδ (%)	26	22	18	16	14	12
Low Temperature Characteristics at 120Hz	Z ratio max.	V_R (V DC)	6.3	10	16	25	35	50
		Z-25°C/Z+20°C	4	3	2	2	2	2
		Z-40°C/Z+20°C	8	6	4	3	3	3

Lifetime Test		
Endurance 85°C (V_R applied)	Test	**1000 hours**
	△C/C_R	≤ ±25% of initial measured value
	tanδ	≤ 200% of initial specified value
	I_{Leak}	≤ the initial specified value
Shelf Life 85°C (V_R = 0)	Test	**1000 hours**
	△C/C_R	≤ ±25% of initial measured value
	tanδ	≤ 200% of initial specified value
	I_{Leak}	≤ the initial specified value
	Before measurement: Restore capacitor to 20°C, apply V_R for 30 min according JIS-C-5101-4	
Resistance to Soldering Heat	The capacitors shall be kept on a hot plate maintained at 250°C for 30 seconds. After removing from the hot plate and restored at room temperature, they meet the characteristic requirements listed below	
	△C/C_R	Within ±10% of initial value
	tanδ	Less than specified value
	I_{Leak}	Less than specified value

STANDARD RATINGS

Part number shows blister tape on paper reel

V_R (V)	C_R (µF)	ø D (mm)	L (mm)	I_R ▪ Max. Ripple Current +85°C ▪ 120Hz (mA rms)	CapXon Part Number
6.3	10	4	5.5	15	KV100M6R3B055ETR
	22	4	5.5	28	KV220M6R3B055ETR
	33	4	5.5	37	KV330M6R3B055ETR
	47	4	5.5	45	KV470M6R3B055ETR
	100	5	5.5	70	KV101M6R3C055ETR
	220	6.3	7.7	102	KV221M6R3E077ETR
	220	8	6.5	110	KV221M6R3F065ETR
	330	6.3	7.7	155	KV331M6R3E077ETR
	330	8	6.5	170	KV331M6R3F065ETR
10	10	4	5.5	23	KV100M010B055ETR
	22	4	5.5	33	KV220M010B055ETR
	33	5	5.5	41	KV330M010C055ETR
	47	6.3	5.5	52	KV470M010E055ETR
	100	6.3	7.7	75	KV101M010E077ETR
	100	8	6.5	80	KV101M010F065ETR
	220	6.3	7.7	125	KV221M010E077ETR
	220	8	6.5	135	KV221M010F065ETR
16	4.7	4	5.5	10	KV4R7M016B055ETR
	10	4	5.5	23	KV100M016B055ETR
	22	5	5.5	37	KV220M016C055ETR
	33	6.3	5.5	49	KV330M016E055ETR
	47	6.3	5.5	58	KV470M016E055ETR
	100	6.3	7.7	85	KV101M016E077ETR
	100	8	6.5	92	KV101M016F065ETR
25	3.3	4	5.5	10	KV3R3M025B055ETR
	4.7	4	5.5	16	KV4R7M025B055ETR
	10	4	5.5	27	KV100M025B055ETR
	22	5	5.5	42	KV220M025C055ETR
	33	6.3	5.5	52	KV330M025E055ETR
	47	6.3	7.7	65	KV470M025E077ETR
	47	8	6.5	70	KV470M025F065ETR
	100	6.3	7.7	102	KV101M025E077ETR
	100	8	6.5	110	KV101M025F065ETR
35	2.2	4	5.5	8.4	KV2R2M035B055ETR
	3.3	4	5.5	15	KV3R3M035B055ETR
	4.7	4	5.5	18	KV4R7M035B055ETR
	10	6.3	5.5	29	KV100M035E055ETR
	22	6.3	5.5	46	KV220M035E055ETR
	33	6.3	7.7	58	KV330M035E077ETR
	33	8	6.5	62	KV330M035F065ETR
	47	6.3	7.7	75	KV470M035E077ETR
	47	8	6.5	80	KV470M035F065ETR

STANDARD RATINGS

Part number shows blister tape on paper reel

V_R (V)	C_R (µF)	ø D (mm)	L (mm)	I_R ▪ Max. Ripple Current +85°C ▪ 120Hz (mA rms)	CapXon Part Number
50	0.1	4	5.5	1	KV0R1M050B055ETR
	0.22	4	5.5	2	KVR22M050B055ETR
	0.33	4	5.5	2.8	KVR33M050B055ETR
	0.47	4	5.5	4	KVR47M050B055ETR
	1	4	5.5	8.4	KV010M050B055ETR
	2.2	4	5.5	13	KV2R2M050B055ETR
	3.3	4	5.5	17	KV3R3M050B055ETR
	4.7	6.3	5.5	20	KV4R7M050E055ETR
	10	6.3	5.5	33	KV100M050E055ETR
	22	6.3	7.7	48	KV220M050E077ETR
	22	8	6.5	52	KV220M050F065ETR
	33	6.3	7.7	66	KV330M050E077ETR
	33	8	6.5	71	KV330M050F065ETR

DIMENSIONS STANDARD PACKAGE ▪ All dimensions in mm

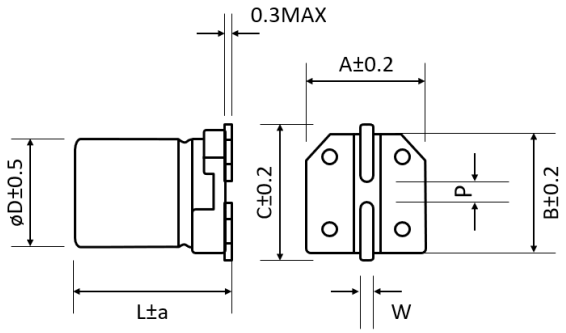

ø D	L	a	A	B	C	W	P±0.2
4	5.5	Max	4.3	4.3	4.9	0.5 to 0.8	1
5	5.5	Max	5.3	5.3	5.9	0.5 to 0.8	1.4
6.3	5.5	0.2	6.6	6.6	7.2	0.5 to 0.8	2.2
6.3	7.7	Max	6.6	6.6	7.2	0.5 to 0.8	2.2
8	6.5	Max	8.3	8.3	9	0.5 to 0.8	2.3

MULTIPLIER K_f for RIPPLE CURRENT vs. FREQUENCY

C_R (µF) / Frequency (Hz)	50/60	100/120	500	1k	≥ 10k
$0.1 \le C_R \le 100$	0.8	1	1.2	1.3	1.5
$100 < C_R \le 330$	0.8	1	1.1	1.15	1.2

PRECAUTIONS, GUIDELINES AND PACKAGING INFORMATON

Unless otherwise agreed in individual specifications, all products are subject to our “General Precautions and Guidelines” as well as our “Packaging Information”. Please refer to the following links in the table.

General Precautions and Guidelines	Packaging Information Liquid SMD
Page 837	Page 88

For further information please contact sales@capxon.org

DISCLAIMER

All product related data (e.g. specification, statements and general information) are subject to change without any notice. It is necessary that the customer observes all product related technical / application information and handling instructions.

CapXon products are designed and manufactured according to severe quality and safety standards. Under no circumstance, CapXon warrants that any CapXon product is suitable for the purposes intended for your application, even CapXon knows the application. It is customer's duty and obligation to check and make sure that CapXon products are suitable for the purposes intended and select the correct and proper CapXon product. Customers are requested to perform a sufficient validation and reliability evaluation to assure needed safety level and reliability performance by suitable designs and to apply proper safeguards (e.g. redundancies, protective circuits).

Particular operating conditions (ambient temperature, ripple current, voltage, thermal resistance, etc.) as well as storage, production or assembly may affect the performance and the lifetime of the capacitor. Please consult CapXon for lifetime estimation, failure mode considerations or worst-case scenarios according to the product technology, product tolerances / deviations or change of the characteristics of the capacitor due to shipment, storage, handling, production and usage.

For aerospace or military application, life-saving, life-sustaining, safety critical applications or any application where failure may cause severe personal injury or death, please consult us before design-in the capacitor in your application.

Except for the written expressed warranties, CapXon does not impliedly, by assumption or whatever else, warrant, undertake, promise any other warranty or guaranty for any CapXon product.

For further information, please visit our website www.capxongroup.com or contact CapXon directly.

NV SERIES ▪ BI-POLAR 85°C TYPE



KEY FEATURES

BI-POLAR

- **ALUMINUM ELECTROLYTIC CAPACITOR** ▪ SMD type
- Endurance: 85°C ▪ 2000 hours
- Bi-Polar, Non-polarized type
- Small dimensions
- Ideal for high density mounting

HF Halogen Free · MSL 1 · RoHS & REACH COMPLIANT

SPECIFICATIONS

Items		Performance Characteristics						
Operating Temperature Range		-40 ~ +85°C						
Rated Voltage Range	V_R	6.3 ~ 50V DC						
Surge Voltage	V_S	$V_S = 1.15 \cdot V_R$						
Capacitance Range	C_R	0.1 ~ 560µF						
Cap. Tolerance	ΔC	±20% (120Hz ▪ 20°C)						
Leakage Current (20°C ▪ V_R applied)	I_{LEAK}	≤ $0.05 \cdot C_R \cdot V_R$ or 10µA, whichever is greater ▪ After 2 minutes [I_{LEAK} (µA) ; C_R (µF) ; V_R (V)]						
Dissipation Factor % (20°C ▪ 120Hz)	tanδ	V_R (V DC)	6.3	10	16	25	35	50
		tanδ (%)	24	20	17	17	15	15
Low Temperature Characteristics at 120Hz	Z ratio max.	V_R (V DC)	6.3	10	16	25	35	50
		Z-25°C/Z+20°C	4	3	2	2	2	2
		Z-40°C/Z+20°C	8	6	4	3	3	3

Lifetime Test		
Endurance 85°C (V_R applied)	Test	**2000 hours**
	△C/C_R	≤ ±25% of initial measured value
	tanδ	≤ 200% of initial specified value
	I_{Leak}	≤ the initial specified value
Shelf Life 85°C (V_R = 0)	Test	**1000 hours**
	△C/C_R	≤ ±25% of initial measured value
	tanδ	≤ 200% of initial specified value
	I_{Leak}	≤ the initial specified value
	Before measurement: Restore capacitor to 20°C, apply V_R for 30 min according JIS-C-5101-4	
Resistance to Soldering Heat	The capacitors shall be kept on a hot plate maintained at 250°C for 30 seconds. After removing from the hot plate and restored at room temperature, they meet the characteristic requirements listed below	
	△C/C_R	Within ±10% of initial value
	tanδ	Less than specified value
	I_{Leak}	Less than specified value

For further information please contact sales@capxon.org

STANDARD RATINGS

Part number shows blister tape on paper reel

V_R (V)	C_R (µF)	ø D (mm)	L (mm)	I_R ▪ Max. Ripple Current +85°C ▪ 120Hz (mA rms)	CapXon Part Number
6.3	10	4	5.5	15	NV100M6R3B055ETR
	22	4	5.5	28	NV220M6R3B055ETR
	22	5	5.5	32	NV220M6R3C055ETR
	33	5	5.5	37	NV330M6R3C055ETR
	47	6.3	5.5	45	NV470M6R3E055ETR
	100	6.3	7.7	65	NV101M6R3E077ETR
	100	8	6.5	70	NV101M6R3F065ETR
	220	8	10.5	120	NV221M6R3F105ETR
	330	8	10.5	160	NV331M6R3F105ETR
	470	10	10.5	190	NV471M6R3G105ETR
	560	10	10.5	220	NV561M6R3G105ETR
10	10	4	5.5	17	NV100M010B055ETR
	22	5	5.5	33	NV220M010C055ETR
	22	6.3	5.5	37	NV220M010E055ETR
	33	6.3	5.5	41	NV330M010E055ETR
	47	6.3	5.5	50	NV470M010E055ETR
	100	6.3	7.7	75	NV101M010E077ETR
	100	8	6.5	80	NV101M010F065ETR
	220	8	10.5	150	NV221M010F105ETR
	330	10	10.5	180	NV331M010G105ETR
16	3.3	4	5.5	12	NV3R3M016B055ETR
	4.7	4	5.5	12	NV4R7M016B055ETR
	10	4	5.5	23	NV100M016B055ETR
	10	5	5.5	23	NV100M016C055ETR
	22	5	5.5	37	NV220M016C055ETR
	22	6.3	5.5	37	NV220M016E055ETR
	33	6.3	5.5	49	NV330M016E055ETR
	47	6.3	7.7	51	NV470M016E077ETR
	47	8	6.5	55	NV470M016F065ETR
	100	8	10.5	100	NV101M016F105ETR
	220	10	10.5	170	NV221M016G105ETR
25	3.3	4	5.5	12	NV3R3M025B055ETR
	3.3	5	5.5	12	NV3R3M025C055ETR
	4.7	4	5.5	16	NV4R7M025B055ETR
	4.7	5	5.5	16	NV4R7M025C055ETR
	10	5	5.5	27	NV100M025C055ETR
	10	6.3	5.5	27	NV100M025E055ETR
	22	6.3	5.5	40	NV220M025E055ETR
	33	6.3	7.7	51	NV330M025E077ETR
	33	8	6.5	55	NV330M025F065ETR
	47	6.3	7.7	56	NV470M025E077ETR
	47	8	6.5	60	NV470M025F065ETR
	100	8	10.5	130	NV101M025F105ETR

STANDARD RATINGS

Part number shows blister tape on paper reel

V_R (V)	C_R (µF)	ø D (mm)	L (mm)	I_R ▪ Max. Ripple Current +85°C ▪ 120Hz (mA rms)	CapXon Part Number
35	2.2	4	5.5	8.4	NV2R2M035B055ETR
	3.3	4	5.5	16	NV3R3M035B055ETR
	3.3	5	5.5	16	NV3R3M035C055ETR
	4.7	4	5.5	18	NV4R7M035B055ETR
	4.7	5	5.5	18	NV4R7M035C055ETR
	10	6.3	5.5	29	NV100M035E055ETR
	22	6.3	5.5	45	NV220M035E055ETR
	33	8	10.5	58	NV330M035F105ETR
	47	8	10.5	64	NV470M035F105ETR
50	0.1	4	5.5	1	NV0R1M050B055ETR
	0.22	4	5.5	2	NVR22M050B055ETR
	0.33	4	5.5	2.8	NVR33M050B055ETR
	0.47	4	5.5	4	NVR47M050B055ETR
	1	4	5.5	8.4	NV010M050B055ETR
	2.2	4	5.5	13	NV2R2M050B055ETR
	2.2	5	5.5	13	NV2R2M050C055ETR
	3.3	4	5.5	17	NV3R3M050B055ETR
	3.3	5	5.5	17	NV3R3M050C055ETR
	4.7	5	5.5	20	NV4R7M050C055ETR
	4.7	6.3	5.5	20	NV4R7M050E055ETR
	10	6.3	5.5	32	NV100M050E055ETR
	22	8	10.5	60	NV220M050F105ETR
	33	10	10.5	75	NV330M050G105ETR
	47	10	10.5	100	NV470M050G105ETR

DIMENSIONS STANDARD PACKAGE ▪ All dimensions in mm

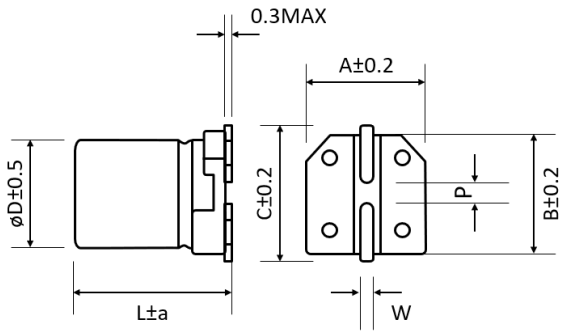

ø D	L	a	A	B	C	W	P±0.2
4	5.5	Max	4.3	4.3	4.9	0.5 to 0.8	1
5	5.5	Max	5.3	5.3	5.9	0.5 to 0.8	1.4
6.3	5.5	0.2	6.6	6.6	7.2	0.5 to 0.8	2.2
6.3	7.7	Max	6.6	6.6	7.2	0.5 to 0.8	2.2
8	6.5	Max	8.3	8.3	9	0.5 to 0.8	2.3
8	10.5	Max	8.3	8.3	9	0.7 to 1.1	3.1
10	10.5	Max	10.3	10.3	11	0.7 to 1.1	4.5

MULTIPLIER K_f for RIPPLE CURRENT vs. FREQUENCY

C_R (µF) / Frequency (Hz)	50/60	100/120	500	1k	≥ 10k
$0.1 \le C_R \le 560$	0.8	1	1.2	1.3	1.5

For further information please contact sales@capxon.org

PRECAUTIONS, GUIDELINES AND PACKAGING INFORMATON

Unless otherwise agreed in individual specifications, all products are subject to our “General Precautions and Guidelines” as well as our “Packaging Information”. Please refer to the following links in the table.

General Precautions and Guidelines	Packaging Information Liquid SMD
Page 837	Page 88

DISCLAIMER

All product related data (e.g. specification, statements and general information) are subject to change without any notice. It is necessary that the customer observes all product related technical / application information and handling instructions.

CapXon products are designed and manufactured according to severe quality and safety standards. Under no circumstance, CapXon warrants that any CapXon product is suitable for the purposes intended for your application, even CapXon knows the application. It is customer's duty and obligation to check and make sure that CapXon products are suitable for the purposes intended and select the correct and proper CapXon product. Customers are requested to perform a sufficient validation and reliability evaluation to assure needed safety level and reliability performance by suitable designs and to apply proper safeguards (e.g. redundancies, protective circuits).

Particular operating conditions (ambient temperature, ripple current, voltage, thermal resistance, etc.) as well as storage, production or assembly may affect the performance and the lifetime of the capacitor. Please consult CapXon for lifetime estimation, failure mode considerations or worst-case scenarios according to the product technology, product tolerances / deviations or change of the characteristics of the capacitor due to shipment, storage, handling, production and usage.

For aerospace or military application, life-saving, life-sustaining, safety critical applications or any application where failure may cause severe personal injury or death, please consult us before design-in the capacitor in your application.

Except for the written expressed warranties, CapXon does not impliedly, by assumption or whatever else, warrant, undertake, promise any other warranty or guaranty for any CapXon product.

For further information, please visit our website www.capxongroup.com or contact CapXon directly.

LV SERIES ▪ HIGH VOLTAGE, AUTOMOTIVE 85°C TYPE



KEY FEATURES

AEC-Q 200 · HIGH VOLTAGE

- **ALUMINUM ELECTROLYTIC CAPACITOR** ▪ SMD type
- Endurance: 85°C ▪ 2000 hours
- Low ESR and high ripple current
- Vibration-proof (VP) version (up to 30g) available upon request
- AEC-Q200 version available

HF Halogen Free · MSL 1 · RoHS & REACH COMPLIANT

SPECIFICATIONS

Items		Performance Characteristics	
Operating Temperature Range		-40 ~ +85°C	
Rated Voltage Range	V_R	4 ~ 100V DC	160 ~ 450V DC
Surge Voltage	V_S	($V_R \le 315V$): $V_S = 1.15 \cdot V_R$	($V_R > 315V$): $V_S = 1.10 \cdot V_R$
Capacitance Range	C_R	0.1 ~ 6800µF	3.3 ~ 68µF
Cap. Tolerance	ΔC	±20% (120Hz ▪ 20°C)	
Leakage Current (20°C ▪ V_R applied)	I_{LEAK}	≤ $0.01 \cdot C_R \cdot V_R$ or 3µA Whichever is greater ▪ After 2 minutes	≤ $0.04 \cdot C_R \cdot V_R$ + 100µA After 1 minute
		[I_{LEAK} (µA) ; C_R (µF) ; V_R (V)]	

Dissipation Factor % (20°C ▪ 120Hz)	tanδ												
	V_R (V DC)	4	6.3	10	16	25	35	50	63	80	100	160 ~ 250	>250
	Ø 4 ~ 6.3	42	30	22	18	16	14	14	12	12	10	-	-
	Ø 8 ~ 10	45	34	26	20	16	14	14	12	12	10	15	20
	≥ Ø 12.5	45	40	36	24	18	15	14	12	12	10	15	20

Low Temperature Characteristics at 120Hz	Z ratio max.													
	V_R (V DC)	4	6.3	10	16	25	35	50	63	80	100	160 ~ 250	400	450
	Z-25°C/Z+20°C	7	4	3	2	2	2	2	3	3	3	3	6	6
	Z-40°C/Z+20°C	15	8	8	4	4	3	3	4	4	4	6	10	15

Lifetime Test		
Endurance 85°C (V_R applied)	Test	**2000 hours**
	△C/C_R	≤ ±25% of initial measured value
	tanδ	≤ 200% of initial specified value
	I_{Leak}	≤ the initial specified value
Shelf Life 85°C (V_R = 0)	Test	**1000 hours**
	△C/C_R	≤ ±25% of initial measured value
	tanδ	≤ 200% of initial specified value
	I_{Leak}	≤ the initial specified value
	Before measurement: Restore capacitor to 20°C, apply V_R for 30 min according JIS-C-5101-4	
Resistance to Soldering Heat	The capacitors shall be kept on a hot plate maintained at 250°C for 30 seconds. After removing from the hot plate and restored at room temperature, they meet the characteristic requirements listed below	
	△C/C_R	Within ±10% of initial value
	tanδ	Less than specified value
	I_{Leak}	Less than specified value

For further information please contact sales@capxon.org

STANDARD RATINGS

Part number shows blister tape on paper reel

V_R (V)	Standard	Vibration-proof	C_R (µF)	ø D (mm)	L (mm)	I_R ▪ Max. Ripple Current +85°C ▪ 120Hz (mA rms)	CapXon Part Number
4	●		47	4	5.5	28	LV470M004B055ETR □□
	●		100	5	5.5	34	LV101M004C055ETR □□
	●	●	150	6.3	6.1	50	LV151M004E061ETR □□
	●	●	220	6.3	5.5	61	LV221M004E055ETR □□
	●	●	330	6.3	7.7	135	LV331M004E077ETR □□
	●	*	330	8	6.5	145	LV331M004F065ETR □□
	●	*	470	8	6.5	180	LV471M004F065ETR □□
	●	●	470	8	10.5	220	LV471M004F105ETR □□
	●	●	560	8	10.5	242	LV561M004F105ETR □□
	●	●	680	8	10.5	285	LV681M004F105ETR □□
	●	●	1000	10	10.5	370	LV102M004G105ETR □□
	●	●	1200	10	10.5	410	LV122M004G105ETR □□
	●	●	1500	10	10.5	470	LV152M004G105ETR □□
6.3	●		22	4	5.5	29	LV220M6R3B055ETR □□
	●		33	4	5.5	33	LV330M6R3B055ETR □□
	●		33	5	5.5	37	LV330M6R3C055ETR □□
	●		47	4	5.5	40	LV470M6R3B055ETR □□
	●		47	5	5.5	46	LV470M6R3C055ETR □□
	●		100	5	5.5	70	LV101M6R3C055ETR □□
	●	●	100	6.3	6.1	85	LV101M6R3E061ETR □□
	●	●	150	6.3	6.1	100	LV151M6R3E061ETR □□
	●	●	220	6.3	6.1	130	LV221M6R3E061ETR □□
	●	●	220	6.3	7.7	141	LV221M6R3E077ETR □□
	●	*	220	8	6.5	150	LV221M6R3F065ETR □□
	●	●	330	6.3	7.7	197	LV331M6R3E077ETR □□
	●	*	330	8	6.5	210	LV331M6R3F065ETR □□
	●		470	8	10.5	380	LV471M6R3F105ETR □□
	●		560	8	10.5	410	LV561M6R3F105ETR □□
	●	●	680	8	10.5	460	LV681M6R3F105ETR □□
	●	●	1000	8	10.5	480	LV102M6R3F105ETR □□
	●	●	1000	10	10.5	500	LV102M6R3G105ETR □□
	●	●	1200	10	10.5	510	LV122M6R3G105ETR □□
	●	●	1500	10	10.5	530	LV152M6R3G105ETR □□
	●	●	3300	12.5	14	750	LV332M6R3Z140ETR □□
	●	●	6800	16	17	1330	LV682M6R3J170ETR □□
10	●		10	4	5.5	21	LV100M010B055ETR □□
	●		22	4	5.5	33	LV220M010B055ETR □□
	●		22	5	5.5	37	LV220M010C055ETR □□
	●		33	4	5.5	41	LV330M010B055ETR □□
	●		33	5	5.5	43	LV330M010C055ETR □□
	●		47	5	5.5	52	LV470M010C055ETR □□
	●		100	6.3	5.5	76	LV101M010E055ETR □□
	●	●	150	6.3	6.1	88	LV151M010E061ETR □□
	●	●	220	6.3	7.7	170	LV221M010E077ETR □□

***Consult CapXon for availability**

□□ **see description at end of standard ratings**

For further information please contact sales@capxon.org

STANDARD RATINGS

Part number shows blister tape on paper reel

V_R (V)	Standard	Vibration-proof	C_R (µF)	ø D (mm)	L (mm)	I_R ▪ Max. Ripple Current +85°C ▪ 120Hz (mA rms)	CapXon Part Number
10	●	*	220	8	6.5	190	LV221M010F065ETR □□
	●	●	330	8	10.5	330	LV331M010F105ETR □□
	●	●	470	8	10.5	420	LV471M010F105ETR □□
	●	●	560	10	10.5	450	LV561M010G105ETR □□
	●	●	680	10	10.5	480	LV681M010G105ETR □□
	●	●	1000	10	10.5	510	LV102M010G105ETR □□
	●	●	2200	12.5	14	730	LV222M010Z140ETR □□
	●	●	4700	16	17	1200	LV472M010J170ETR □□
16	●		10	4	5.5	23	LV100M016B055ETR □□
	●		22	4	5.5	37	LV220M016B055ETR □□
	●		33	5	5.5	45	LV330M016C055ETR □□
	●		47	5	5.5	50	LV470M016C055ETR □□
	●		47	6.3	5.5	60	LV470M016E055ETR □□
	●		100	6.3	5.5	100	LV101M016E055ETR □□
	●	●	100	6.3	6.1	108	LV101M016E061ETR □□
	●	●	150	6.3	7.7	135	LV151M016E077ETR □□
	●	●	220	6.3	7.7	185	LV221M016E077ETR □□
	●	●	220	8	10.5	290	LV221M016F105ETR □□
	●	●	330	8	10.5	330	LV331M016F105ETR □□
	●	●	470	8	10.5	430	LV471M016F105ETR □□
	●	●	470	10	10.5	460	LV471M016G105ETR □□
	●	●	560	10	10.5	500	LV561M016G105ETR □□
	●	●	680	10	10.5	550	LV681M016G105ETR □□
	●	●	1000	12.5	14	600	LV102M016Z140ETR □□
	●	●	1200	12.5	14	660	LV122M016Z140ETR □□
	●	●	1500	12.5	14	710	LV152M016Z140ETR □□
	●	●	3300	16	17	1200	LV332M016J170ETR □□
25	●		4.7	4	5.5	18	LV4R7M025B055ETR □□
	●		10	4	5.5	27	LV100M025B055ETR □□
	●		22	5	5.5	40	LV220M025C055ETR □□
	●		22	6.3	5.5	46	LV220M025E055ETR □□
	●		33	5	5.5	46	LV330M025C055ETR □□
	●		33	6.3	5.5	54	LV330M025E055ETR □□
	●		47	6.3	5.5	60	LV470M025E055ETR □□
	●	●	47	6.3	6.1	68	LV470M025E061ETR □□
	●	●	100	6.3	7.7	150	LV101M025E077ETR □□
	●	*	100	8	6.5	160	LV101M025F065ETR □□
	●	●	150	8	10.5	200	LV151M025F105ETR □□
	●	●	220	8	10.5	300	LV221M025F105ETR □□
	●	●	330	8	10.5	390	LV331M025F105ETR □□
	●	●	330	10	10.5	450	LV331M025G105ETR □□
	●	●	470	10	10.5	480	LV471M025G105ETR □□
	●	●	560	12.5	14	520	LV561M025Z140ETR □□
	●	●	680	12.5	14	580	LV681M025Z140ETR □□

***Consult CapXon for availability**

□□ **see description at end of standard ratings**

STANDARD RATINGS

Part number shows blister tape on paper reel

V_R (V)	Standard	Vibration-proof	C_R (µF)	ø D (mm)	L (mm)	I_R ▪ Max. Ripple Current +85°C ▪ 120Hz (mA rms)	CapXon Part Number
25	●	●	1000	12.5	14	660	LV102M025Z140ETR □□
	●	●	2200	16	17	1150	LV222M025J170ETR □□
35	●		4.7	4	5.5	18	LV4R7M035B055ETR □□
	●		10	4	5.5	29	LV100M035B055ETR □□
	●		22	5	5.5	45	LV220M035C055ETR □□
	●		22	6.3	5.5	48	LV220M035E055ETR □□
	●		33	6.3	5.5	58	LV330M035E055ETR □□
	●		47	6.3	5.5	65	LV470M035E055ETR □□
	●	●	47	6.3	6.1	70	LV470M035E061ETR □□
	●	*	47	8	6.5	115	LV470M035F065ETR □□
	●	●	100	6.3	7.7	250	LV101M035E077ETR □□
	●	●	100	8	10.5	280	LV101M035F105ETR □□
	●	●	150	8	10.5	300	LV151M035F105ETR □□
	●	●	220	8	10.5	350	LV221M035F105ETR □□
	●	●	220	10	10.5	400	LV221M035G105ETR □□
	●	●	330	10	10.5	460	LV331M035G105ETR □□
	●	●	470	12.5	14	590	LV471M035Z140ETR □□
	●	●	560	12.5	14	600	LV561M035Z140ETR □□
	●	●	680	12.5	14	610	LV681M035Z140ETR □□
	●	●	1500	16	17	1060	LV152M035J170ETR □□
50	●		0.1	4	5.5	1	LV0R1M050B055ETR □□
	●		0.22	4	5.5	2	LVR22M050B055ETR □□
	●		0.33	4	5.5	2.8	LVR33M050B055ETR □□
	●		0.47	4	5.5	4	LVR47M050B055ETR □□
	●		1	4	5.5	8.4	LV010M050B055ETR □□
	●		2.2	4	5.5	14	LV2R2M050B055ETR □□
	●		3.3	4	5.5	17	LV3R3M050B055ETR □□
	●		4.7	4	5.5	22	LV4R7M050B055ETR □□
	●		10	5	5.5	30	LV100M050C055ETR □□
	●		10	6.3	5.5	35	LV100M050E055ETR □□
	●	●	22	6.3	6.1	60	LV220M050E061ETR □□
	●	●	22	6.3	7.7	75	LV220M050E077ETR □□
	●	*	22	8	6.5	80	LV220M050F065ETR □□
	●	●	33	6.3	7.7	188	LV330M050E077ETR □□
	●	*	33	8	6.5	200	LV330M050F065ETR □□
	●	●	47	6.3	7.7	225	LV470M050E077ETR □□
	●	*	47	8	6.5	240	LV470M050F065ETR □□
	●	●	100	8	10.5	300	LV101M050F105ETR □□
	●	●	150	10	10.5	320	LV151M050G105ETR □□
	●	●	220	10	10.5	450	LV221M050G105ETR □□
	●	●	330	12.5	14	520	LV331M050Z140ETR □□
	●	●	470	16	17	925	LV471M050J170ETR □□
	●	●	1000	16	17	940	LV102M050J170ETR □□

***Consult CapXon for availability**

□□ **see description at end of standard ratings**

For further information please contact sales@capxon.org

STANDARD RATINGS

Part number shows blister tape on paper reel

V_R (V)	Standard	Vibration-proof	C_R (µF)	ø D (mm)	L (mm)	I_R ▪ Max. Ripple Current +85°C ▪ 120Hz (mA rms)	CapXon Part Number
63	●		0.1	4	5.5	1	LV0R1M063B055ETR □□
	●		0.22	4	5.5	2	LVR22M063B055ETR □□
	●		0.33	4	5.5	2.8	LVR33M063B055ETR □□
	●		0.47	4	5.5	4	LVR47M063B055ETR □□
	●		1	4	5.5	8.4	LV010M063B055ETR □□
	●		2.2	4	5.5	14	LV2R2M063B055ETR □□
	●		3.3	5	5.5	18	LV3R3M063C055ETR □□
	●		4.7	5	5.5	23	LV4R7M063C055ETR □□
	●		4.7	6.3	5.5	27	LV4R7M063E055ETR □□
	●		10	6.3	5.5	35	LV100M063E055ETR □□
	●	●	22	6.3	7.7	75	LV220M063E077ETR □□
	●	*	22	8	6.5	75	LV220M063F065ETR □□
	●	●	33	8	10.5	160	LV330M063F105ETR □□
	●	●	47	8	10.5	170	LV470M063F105ETR □□
	●	●	100	10	10.5	270	LV101M063G105ETR □□
	●	●	100	12.5	14	340	LV101M063Z140ETR □□
	●	●	150	12.5	14	380	LV151M063Z140ETR □□
	●	●	220	12.5	14	460	LV221M063Z140ETR □□
	●	●	330	16	17	560	LV331M063J170ETR □□
	●	●	470	16	17	700	LV471M063J170ETR □□
80	●		1	4	5.5	8	LV010M080B055ETR □□
	●		2.2	5	5.5	16	LV2R2M080C055ETR □□
	●		3.3	6.3	5.5	25	LV3R3M080E055ETR □□
	●		4.7	6.3	5.5	30	LV4R7M080E055ETR □□
	●	●	10	6.3	7.7	40	LV100M080E077ETR □□
	●	●	22	6.3	7.7	70	LV220M080E077ETR □□
	●	●	33	8	10.5	160	LV330M080F105ETR □□
	●	●	47	10	10.5	195	LV470M080G105ETR □□
	●	●	100	12.5	14	380	LV101M080Z140ETR □□
	●	●	150	12.5	14	450	LV151M080Z140ETR □□
	●	●	220	16	17	550	LV221M080J170ETR □□
100	●		1	4	5.5	8	LV010M100B055ETR □□
	●		2.2	6.3	5.5	18	LV2R2M100E055ETR □□
	●	●	2.2	6.3	6.1	20	LV2R2M100E061ETR □□
	●		3.3	6.3	5.5	25	LV3R3M100E055ETR □□
	●	●	3.3	6.3	6.1	28	LV3R3M100E061ETR □□
	●	●	4.7	6.3	7.7	38	LV4R7M100E077ETR □□
	●	*	4.7	8	6.5	38	LV4R7M100F065ETR □□
	●	●	10	6.3	7.7	50	LV100M100E077ETR □□
	●	●	22	8	10.5	120	LV220M100F105ETR □□
	●	●	33	10	10.5	190	LV330M100G105ETR □□
	●	●	47	12.5	14	330	LV470M100Z140ETR □□
	●	●	100	12.5	14	380	LV101M100Z140ETR □□
	●	●	150	16	17	560	LV151M100J170ETR □□

***Consult CapXon for availability**

□□ **see description at end of standard ratings**

For further information please contact sales@capxon.org

STANDARD RATINGS

Part number shows blister tape on paper reel

V_R (V)	Standard	Vibration-proof	C_R (µF)	ø D (mm)	L (mm)	I_R ▪ Max. Ripple Current +85°C ▪ 120Hz (mA rms)	CapXon Part Number
160	●	●	10	8	10.5	70	LV100M160F105ETR □□
	●	●	12	8	10.5	80	LV120M160F105ETR □□
	●	●	18	10	10.5	100	LV180M160G105ETR □□
	●	●	22	10	10.5	150	LV220M160G105ETR □□
	●	●	27	12.5	14	235	LV270M160Z140ETR □□
	●	●	33	12.5	14	250	LV330M160Z140ETR □□
	●	●	39	12.5	14	270	LV390M160Z140ETR □□
	●	●	47	16	17	400	LV470M160J170ETR □□
	●	●	68	16	17	500	LV680M160J170ETR □□
200	●	●	10	10	10.5	100	LV100M200G105ETR □□
	●	●	10	12.5	14	130	LV100M200Z140ETR □□
	●	●	22	12.5	14	235	LV220M200Z140ETR □□
	●	●	27	12.5	14	250	LV270M200Z140ETR □□
	●	●	33	12.5	14	270	LV330M200Z140ETR □□
	●	●	39	16	17	370	LV390M200J170ETR □□
	●	●	47	16	17	420	LV470M200J170ETR □□
	●	●	68	16	17	520	LV680M200J170ETR □□
250	●	●	4.7	8	10.5	70	LV4R7M250F105ETR □□
	●	●	6.8	10	10.5	95	LV6R8M250G105ETR □□
	●	●	10	10	10.5	115	LV100M250G105ETR □□
	●	●	15	12.5	14	180	LV150M250Z140ETR □□
	●	●	22	16	17	280	LV220M250J170ETR □□
	●	●	27	16	17	305	LV270M250J170ETR □□
	●	●	33	16	17	340	LV330M250J170ETR □□
	●	●	39	16	17	370	LV390M250J170ETR □□
	●	●	47	16	17	430	LV470M250J170ETR □□
400	●	●	3.3	10	10.5	50	LV3R3M400G105ETR □□
	●	●	4.7	10	10.5	90	LV4R7M400G105ETR □□
	●	●	4.7	12.5	14	115	LV4R7M400Z140ETR □□
	●	●	6.8	12.5	14	130	LV6R8M400Z140ETR □□
	●	●	8.2	12.5	14	140	LV8R2M400Z140ETR □□
	●	●	10	12.5	14	145	LV100M400Z140ETR □□
	●	●	10	16	17	160	LV100M400J170ETR □□
	●	●	12	16	17	175	LV120M400J170ETR □□
	●	●	15	16	17	170	LV150M400J170ETR □□
	●	●	18	16	17	195	LV180M400J170ETR □□
	●	●	22	16	17	235	LV220M400J170ETR □□

***Consult CapXon for availability**

□□ **see description at end of standard ratings**

STANDARD RATINGS

Part number shows blister tape on paper reel

V_R (V)	Standard	Vibration-proof	C_R (µF)	ø D (mm)	L (mm)	I_R ▪ Max. Ripple Current +85°C ▪ 120Hz (mA rms)	CapXon Part Number
450	●	●	4.7	12.5	14	115	LV4R7M450Z140ETR [ ][ ]
	●	●	6.8	12.5	14	130	LV6R8M450Z140ETR [ ][ ]
	●	●	8.2	12.5	14	140	LV8R2M450Z140ETR [ ][ ]
	●	●	10	12.5	14	145	LV100M450Z140ETR [ ][ ]
	●	●	10	16	17	160	LV100M450J170ETR [ ][ ]
	●	●	12	16	17	175	LV120M450J170ETR [ ][ ]
	●	●	15	16	17	170	LV150M450J170ETR [ ][ ]
	●	●	18	16	17	195	LV180M450J170ETR [ ][ ]
	●	●	22	16	17	235	LV220M450J170ETR [ ][ ]

[ ][ ][ ]: Enter **blank** for Standard package
[ ][ ][ ]: Enter **X** for AEC-Q200
[ ][ ][ ]: Enter **W** for Vibration proof version
[ ][ ][ ]: Enter **XW** for AEC-Q200 and Vibration proof version

DIMENSIONS STANDARD PACKAGE ▪ All dimensions in mm

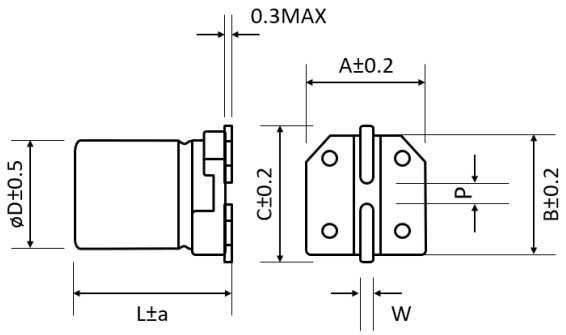

ø D	L	a	A	B	C	W	P±0.2
4	5.5	Max	4.3	4.3	4.9	0.5 to 0.8	1
5	5.5	Max	5.3	5.3	5.9	0.5 to 0.8	1.4
6.3	5.5	0.2	6.6	6.6	7.2	0.5 to 0.8	2.2
6.3	6.1	Max	6.6	6.6	7.2	0.5 to 0.8	2.2
6.3	7.7	Max	6.6	6.6	7.2	0.5 to 0.8	2.2
8	6.5	Max	8.3	8.3	9	0.5 to 0.8	2.3
8	10.5	Max	8.3	8.3	9	0.7 to 1.1	3.1
10	10.5	Max	10.3	10.3	11	0.7 to 1.1	4.5
12.5	14	Max	13	13	13.9	1 to 1.4	4.5
16	17	0.5	17	17	18	1 to 1.4	6.6

DIMENSIONS VP PACKAGE (VIBRATION-PROOF) ▪ All dimensions in mm

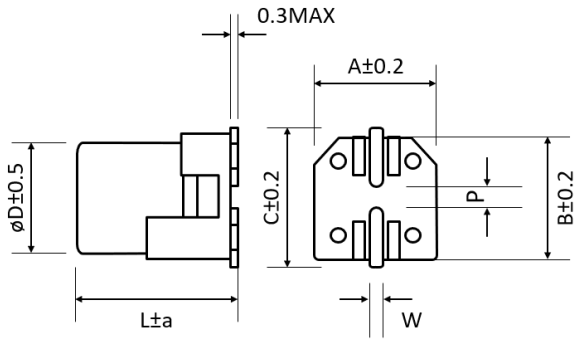

ø D	L	a	A	B	C	W	P±0.2
6.3	6.1	0.5	6.6	6.6	7.2	0.5 to 0.8	2.2
6.3	7.7	0.5	6.6	6.6	7.2	0.5 to 0.8	2.2
8	6.5	0.5	8.3	8.3	9	0.7 to 1.1	3.1
8	10.5	0.5	8.3	8.3	9	0.7 to 1.1	3.1
10	10.5	0.5	10.5	10.5	11.2	0.7 to 1.1	4.5
12.5	14	0.5	13	13	13.9	1 to 1.4	5.5
16	17	0.5	17	17	18	1 to 1.4	6.6

For further information please contact sales@capxon.org

MULTIPLIER K_f for RIPPLE CURRENT vs. FREQUENCY

C_R (µF) / Frequency (Hz)	50/60	100/120	500	1k	≥ 10k
$0.1 \leq C_R \leq 100$	0.8	1	1.2	1.3	1.5
$100 < C_R \leq 6800$	0.8	1	1.1	1.15	1.2

PRECAUTIONS, GUIDELINES AND PACKAGING INFORMATON

Unless otherwise agreed in individual specifications, all products are subject to our “General Precautions and Guidelines” as well as our “Packaging Information”. Please refer to the following links in the table.

General Precautions and Guidelines	Packaging Information Liquid SMD
Page 837	Page 88

DISCLAIMER

All product related data (e.g. specification, statements and general information) are subject to change without any notice. It is necessary that the customer observes all product related technical / application information and handling instructions.

CapXon products are designed and manufactured according to severe quality and safety standards. Under no circumstance, CapXon warrants that any CapXon product is suitable for the purposes intended for your application, even CapXon knows the application. It is customer's duty and obligation to check and make sure that CapXon products are suitable for the purposes intended and select the correct and proper CapXon product. Customers are requested to perform a sufficient validation and reliability evaluation to assure needed safety level and reliability performance by suitable designs and to apply proper safeguards (e.g. redundancies, protective circuits).

Particular operating conditions (ambient temperature, ripple current, voltage, thermal resistance, etc.) as well as storage, production or assembly may affect the performance and the lifetime of the capacitor. Please consult CapXon for lifetime estimation, failure mode considerations or worst-case scenarios according to the product technology, product tolerances / deviations or change of the characteristics of the capacitor due to shipment, storage, handling, production and usage.

For aerospace or military application, life-saving, life-sustaining, safety critical applications or any application where failure may cause severe personal injury or death, please consult us before design-in the capacitor in your application.

Except for the written expressed warranties, CapXon does not impliedly, by assumption or whatever else, warrant, undertake, promise any other warranty or guaranty for any CapXon product.

For further information, please visit our website www.capxongroup.com or contact CapXon directly.

EV SERIES ▪ STANDARD, AUTOMOTIVE 105°C TYPE



KEY FEATURES

AEC-Q 200

- **ALUMINUM ELECTROLYTIC CAPACITOR** ▪ SMD type
- Endurance: 105°C ▪ 1000 hours
- Small dimensions
- Vibration-proof (VP) version (up to 30g) available upon request
- AEC-Q200 version available

HF Halogen Free · MSL 1 · RoHS & REACH COMPLIANT

SPECIFICATIONS

Items		Performance Characteristics						
Operating Temperature Range		-55 ~ +105°C						
Rated Voltage Range	V_R	6.3 ~ 50V DC						
Surge Voltage	V_S	$V_S = 1.15 \cdot V_R$						
Capacitance Range	C_R	0.1 ~ 1500µF						
Cap. Tolerance	ΔC	±20% (120Hz ▪ 20°C)						
Leakage Current (20°C ▪ V_R applied)	I_{LEAK}	≤ $0.01 \cdot C_R \cdot V_R$ or 3µA, whichever is greater ▪ After 2 minutes [I_{LEAK} (µA) ; C_R (µF) ; V_R (V)]						
Dissipation Factor % (20°C ▪ 120Hz)	tanδ	V_R (V DC)	6.3	10	16	25	35	50
		Ø4 to 6.3	30	24	20	18	16	14
		Ø8 to 10	35	28	24	18	16	14
Low Temperature Characteristics at 120Hz	Z ratio max.	V_R (V DC)	6.3	10	16	25	35	50
		Z-25°C/Z+20°C	4	3	2	2	2	2
		Z-40°C/Z+20°C	6	6	4	4	3	3
		Z-55°C/Z+20°C	8	8	6	4	3	3

Lifetime Test				
Endurance 105°C (V_R applied)	Test	**1000 hours**		
	△C/C_R	≤ ±25% of initial measured value	≤16V	
		≤ ±20% of initial measured value	≥25V	
	tanδ	≤ 200% of initial specified value		
	I_{Leak}	≤ the initial specified value		
Shelf Life 105°C (V_R = 0)	Test	**1000 hours**		
	△C/C_R	≤ ±25% of initial measured value	≤16V	
		≤ ±20% of initial measured value	≥25V	
	tanδ	≤ 200% of initial specified value		
	I_{Leak}	≤ the initial specified value		
	Before measurement: Restore capacitor to 20°C, apply V_R for 30 min acc. JIS-C-5101-4			
Resistance to Soldering Heat	The capacitors shall be kept on a hot plate maintained at 250°C for 30 seconds. After removing from the hot plate and restored at room temperature, they meet the characteristic requirements listed below			
	△C/C_R	Within ±10% of initial value		
	tanδ	Less than specified value		
	I_{Leak}	Less than specified value		

For further information please contact sales@capxon.org

STANDARD RATINGS

Part number shows blister tape on paper reel

V_R (V)	Standard	Vibration-proof	C_R (µF)	ø D (mm)	L (mm)	I_R ▪ Max. Ripple Current +105°C ▪ 120Hz (mA rms)	CapXon Part Number
6.3	●		22	4	5.5	22	EV220M6R3B055ETR □□
	●		33	4	5.5	30	EV330M6R3B055ETR □□
	●		47	4	5.5	36	EV470M6R3B055ETR □□
	●		100	5	5.5	60	EV101M6R3C055ETR □□
	●		150	6.3	5.5	86	EV151M6R3E055ETR □□
	●		220	6.3	5.5	89	EV221M6R3E055ETR □□
	●	●	220	6.3	7.7	102	EV221M6R3E077ETR □□
	●	*	220	8	6.5	102	EV221M6R3F065ETR □□
	●	●	330	6.3	7.7	105	EV331M6R3E077ETR □□
	●	*	330	8	6.5	105	EV331M6R3F065ETR □□
	●	●	470	8	10.5	210	EV471M6R3F105ETR □□
	●	●	1000	8	10.5	202	EV102M6R3F105ETR □□
	●	●	1000	10	10.5	230	EV102M6R3G105ETR □□
	●	●	1500	10	10.5	310	EV152M6R3G105ETR □□
10	●		22	4	5.5	27	EV220M010B055ETR □□
	●		33	4	5.5	25	EV330M010B055ETR □□
	●		33	5	5.5	40	EV330M010C055ETR □□
	●		47	5	5.5	46	EV470M010C055ETR □□
	●		100	5	5.5	52	EV101M010C055ETR □□
	●		100	6.3	5.5	60	EV101M010E055ETR □□
	●		150	6.3	5.5	86	EV151M010E055ETR □□
	●	●	220	6.3	7.7	105	EV221M010E077ETR □□
	●	*	220	8	6.5	105	EV221M010F065ETR □□
	●	●	330	8	10.5	195	EV331M010F105ETR □□
	●	●	470	8	10.5	210	EV471M010F105ETR □□
	●	●	1000	10	10.5	310	EV102M010G105ETR □□
16	●		10	4	5.5	18	EV100M016B055ETR □□
	●		22	4	5.5	30	EV220M016B055ETR □□
	●		33	5	5.5	40	EV330M016C055ETR □□
	●		47	5	5.5	51	EV470M016C055ETR □□
	●		100	6.3	5.5	60	EV101M016E055ETR □□
	●	●	150	6.3	7.7	95	EV151M016E077ETR □□
	●	*	150	8	6.5	95	EV151M016F065ETR □□
	●	●	220	6.3	7.7	105	EV221M016E077ETR □□
	●	●	330	8	10.5	195	EV331M016F105ETR □□
	●	●	470	8	10.5	210	EV471M016F105ETR □□
25	●		4.7	4	5.5	16	EV4R7M025B055ETR □□
	●		10	4	5.5	26	EV100M025B055ETR □□
	●		22	5	5.5	38	EV220M025C055ETR □□
	●		33	5	5.5	48	EV330M025C055ETR □□
	●		47	6.3	5.5	63	EV470M025E055ETR □□
	●	●	100	6.3	7.7	91	EV101M025E077ETR □□
	●	*	100	8	6.5	91	EV101M025F065ETR □□
	●	●	150	8	10.5	140	EV151M025F105ETR □□

***Consult CapXon for availability**

□□ **see description at end of standard ratings**

STANDARD RATINGS

Part number shows blister tape on paper reel

V_R (V)	Standard	Vibration-proof	C_R (µF)	ø D (mm)	L (mm)	I_R ▪ Max. Ripple Current +105°C ▪ 120Hz (mA rms)	CapXon Part Number
25	●	●	220	8	10.5	155	EV221M025F105ETR □□
	●	●	330	8	10.5	175	EV331M025F105ETR □□
	●	●	330	10	10.5	198	EV331M025G105ETR □□
	●	●	470	10	10.5	300	EV471M025G105ETR □□
35	●		4.7	4	5.5	16	EV4R7M035B055ETR □□
	●		10	4	5.5	27	EV100M035B055ETR □□
	●		22	5	5.5	37	EV220M035C055ETR □□
	●		22	6.3	5.5	42	EV220M035E055ETR □□
	●		33	6.3	5.5	50	EV330M035E055ETR □□
	●	●	33	6.3	7.7	58	EV330M035E077ETR □□
	●		47	6.3	5.5	58	EV470M035E055ETR □□
	●	●	47	6.3	7.7	66	EV470M035E077ETR □□
	●	●	100	6.3	7.7	84	EV101M035E077ETR □□
	●	*	100	8	6.5	84	EV101M035F065ETR □□
	●	●	150	8	10.5	155	EV151M035F105ETR □□
	●	●	220	8	10.5	167	EV221M035F105ETR □□
	●	●	220	10	10.5	190	EV221M035G105ETR □□
	●	●	330	10	10.5	300	EV331M035G105ETR □□
50	●		0.1	4	5.5	1	EV0R1M050B055ETR □□
	●		0.22	4	5.5	2.6	EVR22M050B055ETR □□
	●		0.33	4	5.5	3.2	EVR33M050B055ETR □□
	●		0.47	4	5.5	3.8	EVR47M050B055ETR □□
	●		1	4	5.5	6.3	EV010M050B055ETR □□
	●		2.2	4	5.5	11	EV2R2M050B055ETR □□
	●		3.3	4	5.5	14	EV3R3M050B055ETR □□
	●		4.7	4	5.5	19	EV4R7M050B055ETR □□
	●		4.7	5	5.5	22	EV4R7M050C055ETR □□
	●		10	5	5.5	29	EV100M050C055ETR □□
	●		10	6.3	5.5	33	EV100M050E055ETR □□
	●		22	6.3	5.5	51	EV220M050E055ETR □□
	●	●	33	6.3	7.7	60	EV330M050E077ETR □□
	●	*	33	8	6.5	60	EV330M050F065ETR □□
	●	●	47	6.3	7.7	66	EV470M050E077ETR □□
	●	*	47	8	6.5	66	EV470M050F065ETR □□
	●	●	100	8	10.5	140	EV101M050F105ETR □□
	●	●	150	10	10.5	180	EV151M050G105ETR □□
	●	●	220	10	10.5	220	EV221M050G105ETR □□

□□: Enter **blank** for Standard package
□□: Enter **W** for Vibration proof version
□□: Enter **X** for AEC-Q200
□□: Enter **XW** for AEC-Q200 and Vibration proof version

For further information please contact sales@capxon.org

DIMENSIONS STANDARD PACKAGE ▪ All dimensions in mm

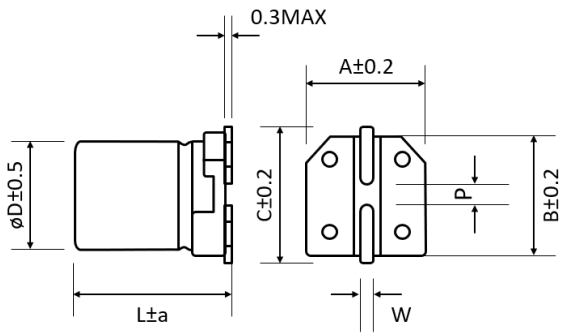

ø D	L	a	A	B	C	W	P±0.2
4	5.5	Max	4.3	4.3	4.9	0.5 to 0.8	1
5	5.5	Max	5.3	5.3	5.9	0.5 to 0.8	1.4
6.3	5.5	0.2	6.6	6.6	7.2	0.5 to 0.8	2.2
6.3	7.7	Max	6.6	6.6	7.2	0.5 to 0.8	2.2
8	6.5	Max	8.3	8.3	9	0.5 to 0.8	2.3
8	10.5	Max	8.3	8.3	9	0.7 to 1.1	3.1
10	10.5	Max	10.3	10.3	11	0.7 to 1.1	4.5

DIMENSIONS VP PACKAGE (VIBRATION-PROOF) ▪ All dimensions in mm

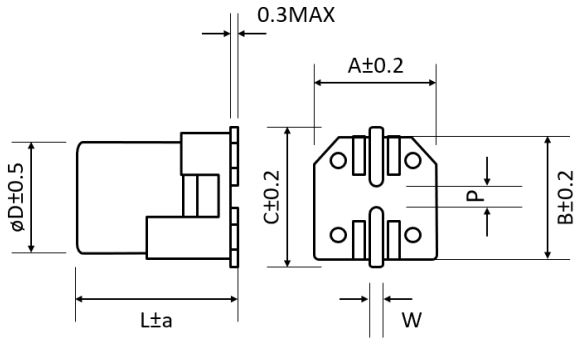

ø D	L	a	A	B	C	W	P±0.2
6.3	7.7	0.5	6.6	6.6	7.2	0.5 to 0.8	2.2
8	6.5	0.5	8.3	8.3	9	0.7 to 1.1	3.1
8	10.5	0.5	8.3	8.3	9	0.7 to 1.1	3.1
10	10.5	0.5	10.5	10.5	11.2	0.7 to 1.1	4.5

MULTIPLIER K_f for RIPPLE CURRENT vs. FREQUENCY

C_R (µF) / Frequency (Hz)	50/60	100/120	500	1k	≥ 10k
$0.1 \le C_R \le 100$	0.8	1	1.2	1.3	1.5
$100 < C_R \le 1500$	0.8	1	1.1	1.15	1.2

For further information please contact sales@capxon.org

PRECAUTIONS, GUIDELINES AND PACKAGING INFORMATON

Unless otherwise agreed in individual specifications, all products are subject to our “General Precautions and Guidelines” as well as our “Packaging Information”. Please refer to the following links in the table.

General Precautions and Guidelines	Packaging Information Liquid SMD
Page 837	Page 88

DISCLAIMER

All product related data (e.g. specification, statements and general information) are subject to change without any notice. It is necessary that the customer observes all product related technical / application information and handling instructions.

CapXon products are designed and manufactured according to severe quality and safety standards. Under no circumstance, CapXon warrants that any CapXon product is suitable for the purposes intended for your application, even CapXon knows the application. It is customer's duty and obligation to check and make sure that CapXon products are suitable for the purposes intended and select the correct and proper CapXon product. Customers are requested to perform a sufficient validation and reliability evaluation to assure needed safety level and reliability performance by suitable designs and to apply proper safeguards (e.g. redundancies, protective circuits).

Particular operating conditions (ambient temperature, ripple current, voltage, thermal resistance, etc.) as well as storage, production or assembly may affect the performance and the lifetime of the capacitor. Please consult CapXon for lifetime estimation, failure mode considerations or worst-case scenarios according to the product technology, product tolerances / deviations or change of the characteristics of the capacitor due to shipment, storage, handling, production and usage.

For aerospace or military application, life-saving, life-sustaining, safety critical applications or any application where failure may cause severe personal injury or death, please consult us before design-in the capacitor in your application.

Except for the written expressed warranties, CapXon does not impliedly, by assumption or whatever else, warrant, undertake, promise any other warranty or guaranty for any CapXon product.

For further information, please visit our website www.capxongroup.com or contact CapXon directly.

HV SERIES ▪ HIGH VOLTAGE, AUTOMOTIVE 105°C TYPE



KEY FEATURES

AEC-Q 200 · HIGH VOLTAGE

- **ALUMINUM ELECTROLYTIC CAPACITOR** ▪ SMD type
- Endurance: 105°C ▪ 2000 hours
- Low ESR and high ripple current
- Vibration-proof (VP) version (up to 30g) available upon request
- AEC-Q200 version available

HF Halogen Free · MSL 1 · RoHS & REACH COMPLIANT

SPECIFICATIONS

Items		Performance Characteristics	
Operating Temperature Range		-55 ~ +105°C	-40 ~ +105°C
Rated Voltage Range	V_R	6.3 ~ 100V DC	160 ~ 450V DC
Surge Voltage	V_S	($V_R \le 315V$): $V_S = 1.15 \cdot V_R$	($V_R > 315V$): $V_S = 1.10 \cdot V_R$
Capacitance Range	C_R	0.1 ~ 6800µF	2.2 ~ 68µF
Cap. Tolerance	ΔC	±20% (120Hz ▪ 20°C)	
Leakage Current (20°C ▪ V_R applied)	I_{LEAK}	≤ $0.01 \cdot C_R \cdot V_R$ or 3µA Whichever is greater ▪ After 2 minutes	≤ $0.04 \cdot C_R \cdot V_R$ + 100µA After 1 minute
		[I_{LEAK} (µA) ; C_R (µF) ; V_R (V)]	

Dissipation Factor % (20°C ▪ 120Hz)	tanδ											
V_R (V DC)		6.3	10	16	25	35	50	63	80	100	160 ~ 250	>250
Ø 4 ~ 6.3		30	24	20	16	14	14	12	10	10	-	-
Ø 8 ~ 10		35	26	24	18	14	14	12	10	10	15	20
≥ Ø 12.5		37	34	24	18	14	14	12	10	10	15	20

Low Temperature Characteristics at 120Hz	Z ratio max.												
V_R (V DC)		6.3	10	16	25	35	50	63	80	100	160 ~ 250	400	450
Z-25°C/Z+20°C		6	4	4	3	2	2	2	3	3	3	6	6
Z-40°C/Z+20°C		12	10	8	6	4	4	4	4	4	6	10	15
Z-55°C/Z+20°C		14	12	10	6	4	4	4	4	4	6	10	15

Lifetime Test		
Endurance 105°C (V_R applied)	Test	**2000 hours**
	△C/C_R	≤ ±30% of initial measured value
	tanδ	≤ 300% of initial specified value
	I_{Leak}	≤ the initial specified value
Shelf Life 105°C (V_R = 0)	Test	**1000 hours**
	△C/C_R	≤ ±30% of initial measured value
	tanδ	≤ 300% of initial specified value
	I_{Leak}	≤ the initial specified value
	Before measurement: Restore capacitor to 20°C, apply V_R for 30 min according JIS-C-5101-4	
Resistance to Soldering Heat	The capacitors shall be kept on a hot plate maintained at 250°C for 30 seconds. After removing from the hot plate and restored at room temperature, they meet the characteristic requirements listed below	
	△C/C_R	Within ±10% of initial value
	tanδ	Less than specified value
	I_{Leak}	Less than specified value

For further information please contact sales@capxon.org

STANDARD RATINGS

Part number shows blister tape on paper reel

V_R (V)	Standard	Vibration-proof	C_R (µF)	ø D (mm)	L (mm)	I_R ▪ Max. Ripple Current +105°C ▪ 120Hz (mA rms)	CapXon Part Number
6.3	●		22	4	5.5	23	HV220M6R3B055ETR □□
	●		33	4	5.5	28	HV330M6R3B055ETR □□
	●		47	4	5.5	37	HV470M6R3B055ETR □□
	●		47	5	5.5	40	HV470M6R3C055ETR □□
	●		100	5	5.5	46	HV101M6R3C055ETR □□
	●		100	6.3	5.5	57	HV101M6R3E055ETR □□
	●		150	6.3	5.5	70	HV151M6R3E055ETR □□
	●	*	150	8	6.5	90	HV151M6R3F065ETR □□
	●	●	220	6.3	7.7	90	HV221M6R3E077ETR □□
	●	*	220	8	6.5	130	HV221M6R3F065ETR □□
	●	●	330	6.3	7.7	140	HV331M6R3E077ETR □□
	●	●	330	8	10.5	170	HV331M6R3F105ETR □□
	●	●	470	8	10.5	210	HV471M6R3F105ETR □□
	●	●	560	8	10.5	310	HV561M6R3F105ETR □□
	●	●	680	8	10.5	330	HV681M6R3F105ETR □□
	●	●	680	10	10.5	370	HV681M6R3G105ETR □□
	●	●	1000	8	10.5	420	HV102M6R3F105ETR □□
	●	●	1000	10	10.5	480	HV102M6R3G105ETR □□
	●	●	1200	10	10.5	500	HV122M6R3G105ETR □□
	●	●	1500	10	10.5	520	HV152M6R3G105ETR □□
	●	●	1800	12.5	14	600	HV182M6R3Z140ETR □□
	●	●	2200	12.5	14	650	HV222M6R3Z140ETR □□
	●	●	3300	12.5	14	700	HV332M6R3Z140ETR □□
	●	●	6800	16	17	930	HV682M6R3J170ETR □□
10	●		22	4	5.5	25	HV220M010B055ETR □□
	●		33	4	5.5	34	HV330M010B055ETR □□
	●		47	5	5.5	42	HV470M010C055ETR □□
	●		100	6.3	5.5	55	HV101M010E055ETR □□
	●	*	100	8	6.5	60	HV101M010F065ETR □□
	●		150	6.3	5.5	90	HV151M010E055ETR □□
	●	*	150	8	6.5	110	HV151M010F065ETR □□
	●	●	220	6.3	7.7	140	HV221M010E077ETR □□
	●	*	220	8	6.5	160	HV221M010F065ETR □□
	●	●	330	8	10.5	195	HV331M010F105ETR □□
	●	●	470	8	10.5	350	HV471M010F105ETR □□
	●	●	470	10	10.5	420	HV471M010G105ETR □□
	●	●	560	10	10.5	450	HV561M010G105ETR □□
	●	●	680	10	10.5	480	HV681M010G105ETR □□
	●	●	1000	10	10.5	530	HV102M010G105ETR □□
	●	●	1200	12.5	14	570	HV122M010Z140ETR □□
	●	●	1500	12.5	14	750	HV152M010Z140ETR □□
	●	●	4700	16	17	880	HV472M010J170ETR □□

***Consult CapXon for availability**

□□ **see description at end of standard ratings**

For further information please contact sales@capxon.org

STANDARD RATINGS

Part number shows blister tape on paper reel

V_R (V)	Standard	Vibration-proof	C_R (µF)	ø D (mm)	L (mm)	I_R ▪ Max. Ripple Current +105°C ▪ 120Hz (mA rms)	CapXon Part Number
16	●		10	4	5.5	20	HV100M016B055ETR □□
	●		22	4	5.5	31	HV220M016B055ETR □□
	●		22	5	5.5	35	HV220M016C055ETR □□
	●		33	5	5.5	36	HV330M016C055ETR □□
	●		33	6.3	5.5	40	HV330M016E055ETR □□
	●	●	47	5	5.5	45	HV470M016C055ETR □□
	●		47	6.3	5.5	56	HV470M016E055ETR □□
	●	●	100	6.3	7.7	58	HV101M016E077ETR □□
	●	*	100	8	6.5	62	HV101M016F065ETR □□
	●	●	150	6.3	7.7	125	HV151M016E077ETR □□
	●	*	150	8	6.5	140	HV151M016F065ETR □□
	●	●	220	6.3	7.7	170	HV221M016E077ETR □□
	●	●	220	8	10.5	185	HV221M016F105ETR □□
	●	●	330	8	10.5	250	HV331M016F105ETR □□
	●		470	8	10.5	370	HV471M016F105ETR □□
	●		470	10	10.5	420	HV471M016G105ETR □□
	●		560	10	10.5	480	HV561M016G105ETR □□
	●		680	10	10.5	540	HV681M016G105ETR □□
	●		1000	12.5	14	580	HV102M016Z140ETR □□
	●	●	1200	12.5	14	590	HV122M016Z140ETR □□
	●	●	1500	12.5	14	620	HV152M016Z140ETR □□
	●	●	3300	16	17	850	HV332M016J170ETR □□
25	●		4.7	4	5.5	12	HV4R7M025B055ETR □□
	●		10	4	5.5	22	HV100M025B055ETR □□
	●		22	5	5.5	38	HV220M025C055ETR □□
	●		33	6.3	5.5	48	HV330M025E055ETR □□
	●	●	47	6.3	7.7	56	HV470M025E077ETR □□
	●	*	47	8	6.5	60	HV470M025F065ETR □□
	●	●	100	6.3	7.7	110	HV101M025E077ETR □□
	●	●	100	8	10.5	160	HV101M025F105ETR □□
	●	●	150	8	10.5	175	HV151M025F105ETR □□
	●	●	220	8	10.5	180	HV221M025F105ETR □□
	●	●	220	10	10.5	190	HV221M025G105ETR □□
	●	●	330	8	10.5	290	HV331M025F105ETR □□
	●	●	470	10	10.5	440	HV471M025G105ETR □□
	●		560	12.5	14	490	HV561M025Z140ETR □□
	●		680	12.5	14	510	HV681M025Z140ETR □□
	●		1000	12.5	14	600	HV102M025Z140ETR □□
	●		2200	16	17	805	HV222M025J170ETR □□
35	●		4.7	4	5.5	14	HV4R7M035B055ETR □□
	●		10	4	5.5	24	HV100M035B055ETR □□
	●		22	5	5.5	40	HV220M035C055ETR □□
	●		22	6.3	5.5	46	HV220M035E055ETR □□
	●	●	33	6.3	7.7	47	HV330M035E077ETR □□

***Consult CapXon for availability**

□□ **see description at end of standard ratings**

STANDARD RATINGS

Part number shows blister tape on paper reel

V_R (V)	Standard	Vibration-proof	C_R (µF)	ø D (mm)	L (mm)	I_R ▪ Max. Ripple Current +105°C ▪ 120Hz (mA rms)	CapXon Part Number
35	●	*	33	8	6.5	50	HV330M035F065ETR □□
	●	●	47	6.3	7.7	60	HV470M035E077ETR □□
	●	*	47	8	6.5	65	HV470M035F065ETR □□
	●	●	100	6.3	7.7	130	HV101M035E077ETR □□
	●	●	100	8	10.5	180	HV101M035F105ETR □□
	●	●	150	8	10.5	190	HV151M035F105ETR □□
	●	●	220	8	10.5	250	HV221M035F105ETR □□
	●	●	220	10	10.5	280	HV221M035G105ETR □□
	●	●	330	10	10.5	360	HV331M035G105ETR □□
	●	●	470	12.5	14	460	HV471M035Z140ETR □□
	●	●	560	12.5	14	500	HV561M035Z140ETR □□
	●	●	1500	16	17	740	HV152M035J170ETR □□
50	●		0.1	4	5.5	1	HV0R1M050B055ETR □□
	●		0.22	4	5.5	2	HVR22M050B055ETR □□
	●		0.33	4	5.5	3	HVR33M050B055ETR □□
	●		0.47	4	5.5	4	HVR47M050B055ETR □□
	●		1	4	5.5	8.4	HV010M050B055ETR □□
	●		2.2	4	5.5	11	HV2R2M050B055ETR □□
	●		3.3	4	5.5	13	HV3R3M050B055ETR □□
	●		4.7	4	5.5	18	HV4R7M050B055ETR □□
	●		10	6.3	5.5	28	HV100M050E055ETR □□
	●	●	22	6.3	7.7	50	HV220M050E077ETR □□
	●	*	22	8	6.5	55	HV220M050F065ETR □□
	●	●	33	6.3	7.7	95	HV330M050E077ETR □□
	●	●	33	8	10.5	135	HV330M050F105ETR □□
	●	●	47	6.3	7.7	115	HV470M050E077ETR □□
	●	●	47	8	10.5	155	HV470M050F105ETR □□
	●	●	100	10	10.5	315	HV101M050G105ETR □□
	●	●	150	10	10.5	330	HV151M050G105ETR □□
	●	●	220	10	10.5	350	HV221M050G105ETR □□
	●	●	330	12.5	14	400	HV331M050Z140ETR □□
	●	●	470	16	17	570	HV471M050J170ETR □□
	●	●	1000	16	17	655	HV102M050J170ETR □□
63	●		0.1	4	5.5	0.7	HV0R1M063B055ETR □□
	●		0.22	4	5.5	1.6	HVR22M063B055ETR □□
	●		0.33	4	5.5	2.5	HVR33M063B055ETR □□
	●		0.47	4	5.5	3.5	HVR47M063B055ETR □□
	●		1	4	5.5	7	HV010M063B055ETR □□
	●		2.2	4	5.5	11	HV2R2M063B055ETR □□
	●		3.3	5	5.5	14	HV3R3M063C055ETR □□
	●		4.7	5	5.5	22	HV4R7M063C055ETR □□
	●		10	6.3	5.5	40	HV100M063E055ETR □□
	●	●	22	6.3	7.7	58	HV220M063E077ETR □□
	●	●	33	8	10.5	112	HV330M063F105ETR □□

***Consult CapXon for availability**

□□ **see description at end of standard ratings**

For further information please contact sales@capxon.org

STANDARD RATINGS

Part number shows blister tape on paper reel

V_R (V)	Standard	Vibration-proof	C_R (µF)	ø D (mm)	L (mm)	I_R ▪ Max. Ripple Current +105°C ▪ 120Hz (mA rms)	CapXon Part Number
63	●	●	47	8	10.5	119	HV470M063F105ETR □□
	●	●	100	10	10.5	280	HV101M063G105ETR □□
	●	●	220	12.5	14	300	HV221M063Z140ETR □□
	●	●	470	16	17	630	HV471M063J170ETR □□
80	●		1	4	5.5	7	HV010M080B055ETR □□
	●		2.2	5	5.5	12	HV2R2M080C055ETR □□
	●		3.3	6.3	5.5	17	HV3R3M080E055ETR □□
	●		4.7	6.3	5.5	25	HV4R7M080E055ETR □□
	●	●	10	6.3	7.7	35	HV100M080E077ETR □□
	●	●	22	6.3	7.7	58	HV220M080E077ETR □□
	●	●	33	8	10.5	112	HV330M080F105ETR □□
	●	●	47	10	10.5	160	HV470M080G105ETR □□
	●	●	100	12.5	14	380	HV101M080Z140ETR □□
	●	●	150	16	17	500	HV151M080J170ETR □□
	●		220	16	17	600	HV221M080J170ETR □□
100	●		1	4	5.5	7	HV010M100B055ETR □□
	●	●	2.2	6.3	6.1	15	HV2R2M100E061ETR □□
	●		2.2	6.3	5.5	13	HV2R2M100E055ETR □□
	●	●	3.3	6.3	6.1	20	HV3R3M100E061ETR □□
	●	●	4.7	6.3	7.7	28	HV4R7M100E077ETR □□
	●	●	10	6.3	7.7	35	HV100M100E077ETR □□
	●	●	22	8	10.5	85	HV220M100F105ETR □□
	●	●	33	10	10.5	135	HV330M100G105ETR □□
	●	●	47	12.5	14	240	HV470M100Z140ETR □□
	●	●	150	16	17	500	HV151M100J170ETR □□
160	●	●	10	8	10.5	57	HV100M160F105ETR □□
	●	●	12	8	10.5	60	HV120M160F105ETR □□
	●	●	18	10	10.5	65	HV180M160G105ETR □□
	●	●	22	10	10.5	70	HV220M160G105ETR □□
	●	●	27	12.5	14	85	HV270M160Z140ETR □□
	●	●	33	12.5	14	95	HV330M160Z140ETR □□
	●	●	39	12.5	14	105	HV390M160Z140ETR □□
	●	●	47	16	17	260	HV470M160J170ETR □□
	●	●	68	16	17	300	HV680M160J170ETR □□
200	●	●	10	10	10.5	64	HV100M200G105ETR □□
	●	●	10	12.5	14	80	HV100M200Z140ETR □□
	●	●	22	12.5	14	105	HV220M200Z140ETR □□
	●	●	27	12.5	14	115	HV270M200Z140ETR □□
	●	●	33	12.5	14	170	HV330M200Z140ETR □□
	●	●	33	16	17	220	HV330M200J170ETR □□
	●	●	47	16	17	260	HV470M200J170ETR □□

***Consult CapXon for availability**

□□ **see description at end of standard ratings**

STANDARD RATINGS

Part number shows blister tape on paper reel

V_R (V)	Standard	Vibration-proof	C_R (µF)	ø D (mm)	L (mm)	I_R ▪ Max. Ripple Current +105°C ▪ 120Hz (mA rms)	CapXon Part Number
250	●	●	4.7	8	10.5	50	HV4R7M250F105ETR □□
	●	●	6.8	10	10.5	60	HV6R8M250G105ETR □□
	●	●	10	10	10.5	75	HV100M250G105ETR □□
	●	●	15	12.5	14	120	HV150M250Z140ETR □□
	●	●	22	16	17	180	HV220M250J170ETR □□
	●	●	27	16	17	200	HV270M250J170ETR □□
	●	●	33	16	17	230	HV330M250J170ETR □□
	●	●	39	16	17	260	HV390M250J170ETR □□
	●	●	47	16	17	285	HV470M250J170ETR □□
400	●	●	2.2	8	10.5	27	HV2R2M400F105ETR □□
	●	●	3.3	8	10.5	34	HV3R3M400F105ETR □□
	●	●	3.9	10	10.5	40	HV3R9M400G105ETR □□
	●	●	4.7	10	10.5	40	HV4R7M400G105ETR □□
	●	●	4.7	12.5	14	50	HV4R7M400Z140ETR □□
	●	●	6.8	12.5	14	60	HV6R8M400Z140ETR □□
	●	●	8.2	12.5	14	65	HV8R2M400Z140ETR □□
	●	●	10	12.5	14	70	HV100M400Z140ETR □□
	●	●	10	16	17	85	HV100M400J170ETR □□
	●	●	12	16	17	95	HV120M400J170ETR □□
	●	●	22	16	17	120	HV220M400J170ETR □□
450	●	●	3.3	10	10.5	40	HV3R3M450G105ETR □□
	●	●	3.9	10	10.5	40	HV3R9M450G105ETR □□
	●	●	4.7	12.5	14	50	HV4R7M450Z140ETR □□
	●	●	6.8	12.5	14	60	HV6R8M450Z140ETR □□
	●	●	8.2	12.5	14	65	HV8R2M450Z140ETR □□
	●	●	10	12.5	14	70	HV100M450Z140ETR □□
	●	●	10	16	17	85	HV100M450J170ETR □□
	●	●	12	16	17	95	HV120M450J170ETR □□
	●	●	15	16	17	100	HV150M450J170ETR □□
	●	●	22	16	17	120	HV220M450J170ETR □□

□□□: Enter **blank** for Standard package
□□□: Enter **X** for AEC-Q200
□□□: Enter **W** for Vibration proof version
□□□: Enter **XW** for AEC-Q200 and Vibration proof version

For further information please contact sales@capxon.org

DIMENSIONS STANDARD PACKAGE ▪ All dimensions in mm

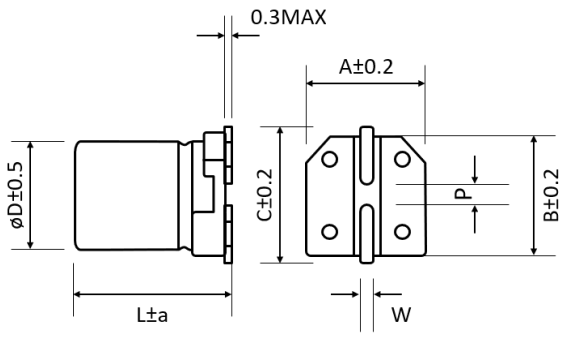

ø D	L	a	A	B	C	W	P±0.2
4	5.5	Max	4.3	4.3	4.9	0.5 to 0.8	1
5	5.5	Max	5.3	5.3	5.9	0.5 to 0.8	1.4
6.3	5.5	0.2	6.6	6.6	7.2	0.5 to 0.8	2.2
6.3	6.1	Max	6.6	6.6	7.2	0.5 to 0.8	2.2
6.3	7.7	Max	6.6	6.6	7.2	0.5 to 0.8	2.2
8	6.5	Max	8.3	8.3	9	0.5 to 0.8	2.3
8	10.5	Max	8.3	8.3	9	0.7 to 1.1	3.1
10	10.5	Max	10.3	10.3	11	0.7 to 1.1	4.5
12.5	14	Max	13	13	13.9	1 to 1.4	4.5
16	17	0.5	17	17	18	1 to 1.4	6.6

DIMENSIONS VP PACKAGE (VIBRATION-PROOF) ▪ All dimensions in mm

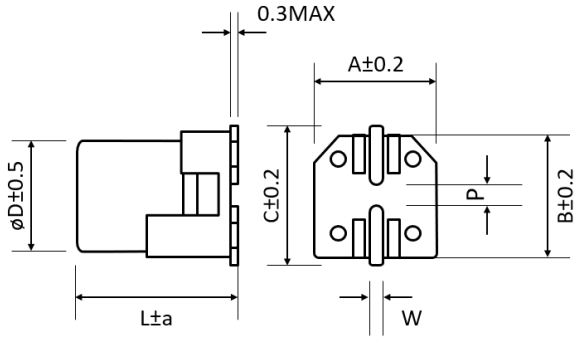

ø D	L	a	A	B	C	W	P±0.2
6.3	6.1	0.5	6.6	6.6	7.2	0.5 to 0.8	2.2
6.3	7.7	0.5	6.6	6.6	7.2	0.5 to 0.8	2.2
8	6.5	0.5	8.3	8.3	9	0.7 to 1.1	3.1
8	10.5	0.5	8.3	8.3	9	0.7 to 1.1	3.1
10	10.5	0.5	10.5	10.5	11.2	0.7 to 1.1	4.5
12.5	14	0.5	13	13	13.9	1 to 1.4	5.5
16	17	0.5	17	17	18	1 to 1.4	6.6

MULTIPLIER K_f for RIPPLE CURRENT vs. FREQUENCY

C_R (µF) / Frequency (Hz)	50/60	100/120	500	1k	≥ 10k
$0.1 \le C_R \le 100$	0.8	1	1.2	1.3	1.5
$100 < C_R \le 6800$	0.8	1	1.1	1.15	1.2

PRECAUTIONS, GUIDELINES AND PACKAGING INFORMATON

Unless otherwise agreed in individual specifications, all products are subject to our “General Precautions and Guidelines” as well as our “Packaging Information”. Please refer to the following links in the table.

General Precautions and Guidelines	Packaging Information Liquid SMD
Page 837	Page 88

For further information please contact sales@capxon.org

DISCLAIMER

All product related data (e.g. specification, statements and general information) are subject to change without any notice. It is necessary that the customer observes all product related technical / application information and handling instructions.

CapXon products are designed and manufactured according to severe quality and safety standards. Under no circumstance, CapXon warrants that any CapXon product is suitable for the purposes intended for your application, even CapXon knows the application. It is customer's duty and obligation to check and make sure that CapXon products are suitable for the purposes intended and select the correct and proper CapXon product. Customers are requested to perform a sufficient validation and reliability evaluation to assure needed safety level and reliability performance by suitable designs and to apply proper safeguards (e.g. redundancies, protective circuits).

Particular operating conditions (ambient temperature, ripple current, voltage, thermal resistance, etc.) as well as storage, production or assembly may affect the performance and the lifetime of the capacitor. Please consult CapXon for lifetime estimation, failure mode considerations or worst-case scenarios according to the product technology, product tolerances / deviations or change of the characteristics of the capacitor due to shipment, storage, handling, production and usage.

For aerospace or military application, life-saving, life-sustaining, safety critical applications or any application where failure may cause severe personal injury or death, please consult us before design-in the capacitor in your application.

Except for the written expressed warranties, CapXon does not impliedly, by assumption or whatever else, warrant, undertake, promise any other warranty or guaranty for any CapXon product.

For further information, please visit our website www.capxongroup.com or contact CapXon directly.

JV SERIES ▪ LONG LIFE, AUTOMOTIVE 105°C TYPE



KEY FEATURES

AEC-Q 200

- **ALUMINUM ELECTROLYTIC CAPACITOR** ▪ SMD type
- Endurance: 105°C ▪ 3000 hours
- Small dimensions
- Vibration-proof (VP) version (up to 30g) available upon request
- AEC-Q200 version available

HF Halogen Free · MSL 1 · RoHS & REACH COMPLIANT

SPECIFICATIONS

Items		Performance Characteristics						
Operating Temperature Range		-55 ~ +105°C						
Rated Voltage Range	V_R	6.3 ~ 50V DC						
Surge Voltage	V_S	$V_S = 1.15 \cdot V_R$						
Capacitance Range	C_R	0.1 ~ 1000µF						
Cap. Tolerance	ΔC	±20% (120Hz ▪ 20°C)						
Leakage Current (20°C ▪ V_R applied)	I_{LEAK}	≤ $0.01 \cdot C_R \cdot V_R$ or 3µA, whichever is greater ▪ After 2 minutes [I_{LEAK} (µA) ; C_R (µF) ; V_R (V)]						
Dissipation Factor % (20°C ▪ 120Hz)	tanδ	V_R (V DC)	6.3	10	16	25	35	50
		tanδ	28	24	20	16	13	12
Low Temperature Characteristics at 120Hz	Z ratio max.	V_R (V DC)	6.3	10	16	25	35	50
		Z-25°C/Z+20°C	4	3	2	2	2	2
		Z-40°C/Z+20°C	10	7	5	3	3	3
		Z-55°C/Z+20°C	12	10	6	5	4	4

Lifetime Test		
Endurance 105°C (V_R applied)	Test	**3000 hours**
	$\triangle C/C_R$	≤ ±30% of initial measured value
	tanδ	≤ 300% of initial specified value
	I_{Leak}	≤ the initial specified value
Shelf Life 105°C (V_R = 0)	Test	**1000 hours**
	$\triangle C/C_R$	≤ ±30% of initial measured value
	tanδ	≤ 300% of initial specified value
	I_{Leak}	≤ the initial specified value
	Before measurement: Restore capacitor to 20°C, apply V_R for 30 min according JIS-C-5101-4	
Resistance to Soldering Heat	The capacitors shall be kept on a hot plate maintained at 250°C for 30 seconds. After removing from the hot plate and restored at room temperature, they meet the characteristic requirements listed below	
	$\triangle C/C_R$	Within ±10% of initial value
	tanδ	Less than specified value
	I_{Leak}	Less than specified value

For further information please contact sales@capxon.org

STANDARD RATINGS

Part number shows blister tape on paper reel

V_R (V)	Standard	Vibration-proof	C_R (µF)	ø D (mm)	L (mm)	I_R ▪ Max. Ripple Current +105°C ▪ 120Hz (mA rms)	CapXon Part Number
6.3	●		22	4	5.5	22	JV220M6R3B055ETR □□
	●		33	5	5.5	33	JV330M6R3C055ETR □□
	●		47	5	5.5	36	JV470M6R3C055ETR □□
	●		100	6.3	5.5	68	JV101M6R3E055ETR □□
	●	●	220	6.3	7.7	120	JV221M6R3E077ETR □□
	●	●	330	8	10.5	230	JV331M6R3F105ETR □□
	●	●	470	10	10.5	290	JV471M6R3G105ETR □□
	●	●	1000	10	10.5	360	JV102M6R3G105ETR □□
10	●		22	5	5.5	30	JV220M010C055ETR □□
	●		33	5	5.5	35	JV330M010C055ETR □□
	●		47	6.3	5.5	52	JV470M010E055ETR □□
	●	●	100	6.3	7.7	81	JV101M010E077ETR □□
	●	●	220	8	10.5	142	JV221M010F105ETR □□
	●	●	330	10	10.5	280	JV331M010G105ETR □□
	●		470	10	10.5	305	JV471M010G105ETR □□
16	●		10	4	5.5	18	JV100M016B055ETR □□
	●		22	5	5.5	31	JV220M016C055ETR □□
	●		33	6.3	5.5	48	JV330M016E055ETR □□
	●		47	6.3	5.5	51	JV470M016E055ETR □□
	●	●	100	6.3	7.7	83	JV101M016E077ETR □□
	●	●	220	10	10.5	222	JV221M016G105ETR □□
	●	●	330	10	10.5	305	JV331M016G105ETR □□
	●	●	470	10	10.5	330	JV471M016G105ETR □□
25	●		4.7	4	5.5	16	JV4R7M025B055ETR □□
	●		10	4	5.5	26	JV100M025B055ETR □□
	●		22	6.3	5.5	44	JV220M025E055ETR □□
	●		33	6.3	5.5	50	JV330M025E055ETR □□
	●	●	47	6.3	7.7	66	JV470M025E077ETR □□
	●	●	100	8	10.5	118	JV101M025F105ETR □□
	●	●	220	10	10.5	300	JV221M025G105ETR □□
	●	●	330	10	10.5	395	JV331M025G105ETR □□
	●	●	470	10	10.5	470	JV471M025G105ETR □□
35	●		4.7	4	5.5	16	JV4R7M035B055ETR □□
	●		10	5	5.5	27	JV100M035C055ETR □□
	●		22	6.3	5.5	45	JV220M035E055ETR □□
	●	●	33	6.3	7.7	58	JV330M035E077ETR □□
	●	●	47	8	10.5	93	JV470M035F105ETR □□
	●	●	100	10	10.5	155	JV101M035G105ETR □□
	●	●	220	10	10.5	340	JV221M035G105ETR □□
	●	●	330	10	10.5	420	JV331M035G105ETR □□

□□ **see description at end of standard ratings**

For further information please contact sales@capxon.org

STANDARD RATINGS

Part number shows blister tape on paper reel

V_R (V)	Standard	Vibration-proof	C_R (µF)	ø D (mm)	L (mm)	I_R ▪ Max. Ripple Current +105°C ▪ 120Hz (mA rms)	CapXon Part Number
50	●		0.1	4	5.5	1	JV0R1M050B055ETR ☐☐
	●		0.22	4	5.5	2.6	JVR22M050B055ETR ☐☐
	●		0.33	4	5.5	3.2	JVR33M050B055ETR ☐☐
	●		0.47	4	5.5	5	JVR47M050B055ETR ☐☐
	●		1	4	5.5	8	JV010M050B055ETR ☐☐
	●		2.2	4	5.5	12	JV2R2M050B055ETR ☐☐
	●		3.3	4	5.5	17	JV3R3M050B055ETR ☐☐
	●		4.7	5	5.5	22	JV4R7M050C055ETR ☐☐
	●		10	6.3	5.5	33	JV100M050E055ETR ☐☐
	●	●	22	6.3	7.7	58	JV220M050E077ETR ☐☐
	●	●	33	8	10.5	140	JV330M050F105ETR ☐☐
	●	●	47	8	10.5	170	JV470M050F105ETR ☐☐
	●	●	100	10	10.5	300	JV101M050G105ETR ☐☐

☐☐☐: Enter **blank** for Standard package
☐☐☐: Enter **W** for Vibration proof version
☐☐☐: Enter **X** for AEC-Q200
☐☐☐: Enter **XW** for AEC-Q200 and Vibration proof version

DIMENSIONS STANDARD PACKAGE ▪ All dimensions in mm

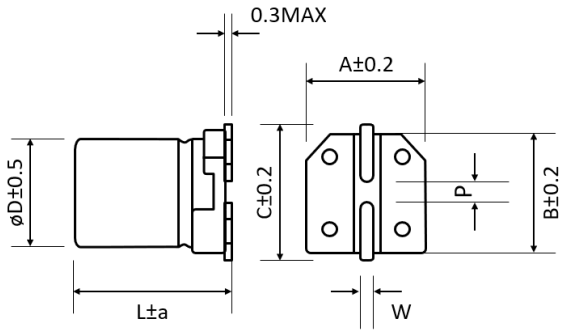

ø D	L	a	A	B	C	W	P±0.2
4	5.5	Max	4.3	4.3	4.9	0.5 to 0.8	1
5	5.5	Max	5.3	5.3	5.9	0.5 to 0.8	1.4
6.3	5.5	0.2	6.6	6.6	7.2	0.5 to 0.8	2.2
6.3	7.7	Max	6.6	6.6	7.2	0.5 to 0.8	2.2
8	10.5	Max	8.3	8.3	9	0.7 to 1.1	3.1
10	10.5	Max	10.3	10.3	11	0.7 to 1.1	4.5

DIMENSIONS VP PACKAGE (VIBRATION-PROOF) ▪ All dimensions in mm

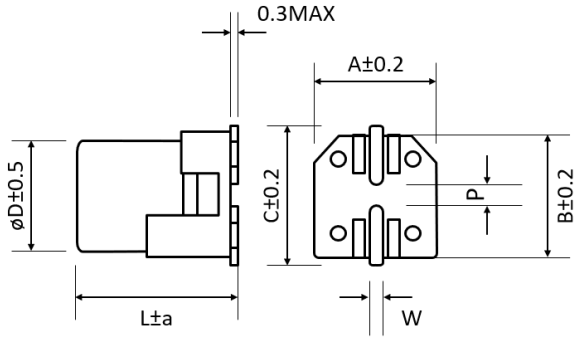

ø D	L	a	A	B	C	W	P±0.2
6.3	7.7	0.5	6.6	6.6	7.2	0.5 to 0.8	2.2
8	10.5	0.5	8.3	8.3	9	0.7 to 1.1	3.1
10	10.5	0.5	10.5	10.5	11.2	0.7 to 1.1	4.5

For further information please contact sales@capxon.org

MULTIPLIER K_f for RIPPLE CURRENT vs. FREQUENCY

C_R (µF) / Frequency (Hz)	50/60	100/120	500	1k	≥ 10k
$0.1 \leq C_R \leq 100$	0.8	1	1.2	1.3	1.5
$100 < C_R \leq 1000$	0.8	1	1.1	1.15	1.2

PRECAUTIONS, GUIDELINES AND PACKAGING INFORMATON

Unless otherwise agreed in individual specifications, all products are subject to our “General Precautions and Guidelines” as well as our “Packaging Information”. Please refer to the following links in the table.

General Precautions and Guidelines	Packaging Information Liquid SMD
Page 837	Page 88

DISCLAIMER

All product related data (e.g. specification, statements and general information) are subject to change without any notice. It is necessary that the customer observes all product related technical / application information and handling instructions.

CapXon products are designed and manufactured according to severe quality and safety standards. Under no circumstance, CapXon warrants that any CapXon product is suitable for the purposes intended for your application, even CapXon knows the application. It is customer's duty and obligation to check and make sure that CapXon products are suitable for the purposes intended and select the correct and proper CapXon product. Customers are requested to perform a sufficient validation and reliability evaluation to assure needed safety level and reliability performance by suitable designs and to apply proper safeguards (e.g. redundancies, protective circuits).

Particular operating conditions (ambient temperature, ripple current, voltage, thermal resistance, etc.) as well as storage, production or assembly may affect the performance and the lifetime of the capacitor. Please consult CapXon for lifetime estimation, failure mode considerations or worst-case scenarios according to the product technology, product tolerances / deviations or change of the characteristics of the capacitor due to shipment, storage, handling, production and usage.

For aerospace or military application, life-saving, life-sustaining, safety critical applications or any application where failure may cause severe personal injury or death, please consult us before design-in the capacitor in your application.

Except for the written expressed warranties, CapXon does not impliedly, by assumption or whatever else, warrant, undertake, promise any other warranty or guaranty for any CapXon product.

For further information, please visit our website www.capxongroup.com or contact CapXon directly.

DV SERIES ▪ LOW IMPEDANCE, AUTOMOTIVE 105°C TYPE



KEY FEATURES

AEC-Q 200 · LOW IMPEDANCE

- **ALUMINUM ELECTROLYTIC CAPACITOR** ▪ SMD type
- Endurance: 105°C ▪ 2000 hours up to 5000 hours
- Low impedance type
- Vibration-proof (VP) version (up to 30g) available upon request
- AEC-Q200 version available

HF Halogen Free · MSL 1 · RoHS & REACH COMPLIANT

SPECIFICATIONS

Items		Performance Characteristics								
Operating Temperature Range		-55 ~ +105°C								
Rated Voltage Range	V_R	6.3 ~ 100V DC								
Surge Voltage	V_S	$V_S = 1.15 \cdot V_R$								
Capacitance Range	C_R	1 ~ 6800µF								
Cap. Tolerance	ΔC	±20% (120Hz ▪ 20°C)								
Leakage Current (20°C ▪ V_R applied)	I_{LEAK}	≤ $0.01 \cdot C_R \cdot V_R$ or 3µA, whichever is greater ▪ After 2 minutes [I_{LEAK} (µA) ; C_R (µF) ; V_R (V)]								
Dissipation Factor % (20°C ▪ 120Hz)	tanδ	V_R (V DC)	6.3	10	16	25	35	50	63	80	100
		tanδ	24	19	16	14	14	12	10	9	8
Low Temperature Characteristics at 120Hz	Z ratio max.	V_R (V DC)	6.3	10	16	25	35	50	63	80	100
		Z-25°C/Z+20°C	2	2	2	2	2	2	2	2	2
		Z-40°C/Z+20°C	8	6	4	4	3	3	3	3	3
		Z-55°C/Z+20°C	12	10	6	6	4	4	4	4	4

Lifetime Test			
Endurance 105°C (V_R applied)	Test	**5000 hours**	≥ Ø 12.5mm
		2000 hours	< Ø 12.5mm
	△C/C_R	≤ ±30% of initial measured value	
	tanδ	≤ 300% of initial specified value	
	I_{Leak}	≤ the initial specified value	
Shelf Life 105°C (V_R = 0)	Test	**1000 hours**	
	△C/C_R	≤ ±30% of initial measured value	
	tanδ	≤ 300% of initial specified value	
	I_{Leak}	≤ the initial specified value	
	Before measurement: Restore capacitor to 20°C, apply V_R for 30 min according JIS-C-5101-4		
Resistance to Soldering Heat	The capacitors shall be kept on a hot plate maintained at 250°C for 30 seconds. After removing from the hot plate and restored at room temperature, they meet the characteristic requirements listed below		
	△C/C_R	Within ±10% of initial value	
	tanδ	Less than specified value	
	I_{Leak}	Less than specified value	

For further information please contact sales@capxon.org

STANDARD RATINGS

Part number shows blister tape on paper reel

V_R (V)	Standard	Vibration-proof	C_R (µF)	ø D (mm)	L (mm)	Z ▪ Max. Impedance +20°C ▪ 100kHz (mΩ)	I_R ▪ Max. Ripple Current +105°C ▪ 100kHz (mA rms)	CapXon Part Number
6.3	●		22	4	5.5	2200	75	DV220M6R3B055ETR □□
	●		27	4	5.5	1980	79	DV270M6R3B055ETR □□
	●		33	4	5.5	1900	82	DV330M6R3B055ETR □□
	●		33	5	5.5	1300	130	DV330M6R3C055ETR □□
	●		47	4	5.5	1880	86	DV470M6R3B055ETR □□
	●		47	5	5.5	1100	150	DV470M6R3C055ETR □□
	●		56	5	5.5	1100	150	DV560M6R3C055ETR □□
	●		68	5	5.5	900	160	DV680M6R3C055ETR □□
	●		68	6.3	5.5	550	220	DV680M6R3E055ETR □□
	●		100	5	5.5	800	170	DV101M6R3C055ETR □□
	●		100	6.3	5.5	530	230	DV101M6R3E055ETR □□
	●		150	6.3	5.5	510	235	DV151M6R3E055ETR □□
	●	*	150	8	6.5	480	250	DV151M6R3F065ETR □□
	●	●	220	6.3	7.7	450	260	DV221M6R3E077ETR □□
	●		220	6.3	5.5	480	240	DV221M6R3E055ETR □□
	●	●	330	6.3	7.7	360	275	DV331M6R3E077ETR □□
	●	*	330	8	6.5	340	290	DV331M6R3F065ETR □□
	●	●	470	8	10.5	280	450	DV471M6R3F105ETR □□
	●	●	680	8	10.5	250	500	DV681M6R3F105ETR □□
	●	●	1000	8	10.5	200	530	DV102M6R3F105ETR □□
	●	●	1000	10	10.5	170	570	DV102M6R3G105ETR □□
	●	●	1200	10	10.5	160	600	DV122M6R3G105ETR □□
	●	●	1500	10	10.5	130	650	DV152M6R3G105ETR □□
	●	●	1800	10	10.5	80	860	DV182M6R3G105ETR □□
	●	●	3300	12.5	14	80	1100	DV332M6R3Z140ETR □□
	●	●	6800	16	17	52	1250	DV682M6R3J170ETR □□
10	●		22	4	5.5	2200	80	DV220M010B055ETR □□
	●		27	5	5.5	1900	125	DV270M010C055ETR □□
	●		33	4	5.5	1850	90	DV330M010B055ETR □□
	●		33	5	5.5	1200	150	DV330M010C055ETR □□
	●		47	5	5.5	1100	165	DV470M010C055ETR □□
	●		47	6.3	5.5	590	180	DV470M010E055ETR □□
	●		56	6.3	5.5	570	210	DV560M010E055ETR □□
	●		68	6.3	5.5	550	220	DV680M010E055ETR □□
	●		100	5	5.5	800	210	DV101M010C055ETR □□
	●		100	6.3	5.5	530	240	DV101M010E055ETR □□
	●		150	6.3	5.5	490	250	DV151M010E055ETR □□
	●	*	150	8	6.5	470	260	DV151M010F065ETR □□
	●	●	220	6.3	7.7	440	270	DV221M010E077ETR □□
	●	*	220	8	6.5	400	285	DV221M010F065ETR □□
	●	●	330	8	10.5	250	500	DV331M010F105ETR □□
	●	●	470	8	10.5	250	550	DV471M010F105ETR □□
	●	●	680	10	10.5	200	680	DV681M010G105ETR □□

***Consult CapXon for availability**

□□ **see description at end of standard ratings**

For further information please contact sales@capxon.org

STANDARD RATINGS

Part number shows blister tape on paper reel

V_R (V)	Standard	Vibration-proof	C_R (µF)	ø D (mm)	L (mm)	Z ▪ Max. Impedance +20°C ▪ 100kHz (mΩ)	I_R ▪ Max. Ripple Current +105°C ▪ 100kHz (mA rms)	CapXon Part Number
10	●	●	1000	10	10.5	150	740	DV102M010G105ETR ☐☐
	●	●	2200	12.5	14	80	1100	DV222M010Z140ETR ☐☐
	●	●	4700	16	17	52	1250	DV472M010J170ETR ☐☐
16	●		10	4	5.5	2200	80	DV100M016B055ETR ☐☐
	●		15	4	5.5	2000	85	DV150M016B055ETR ☐☐
	●		22	4	5.5	1980	90	DV220M016B055ETR ☐☐
	●		22	5	5.5	1600	140	DV220M016C055ETR ☐☐
	●		27	5	5.5	740	170	DV270M016C055ETR ☐☐
	●		33	6.3	5.5	600	185	DV330M016E055ETR ☐☐
	●		47	5	5.5	1050	195	DV470M016C055ETR ☐☐
	●		47	6.3	5.5	580	210	DV470M016E055ETR ☐☐
	●		56	6.3	5.5	560	220	DV560M016E055ETR ☐☐
	●		68	6.3	5.5	540	230	DV680M016E055ETR ☐☐
	●	*	68	8	6.5	500	240	DV680M016F065ETR ☐☐
	●		100	6.3	5.5	520	255	DV101M016E055ETR ☐☐
	●	●	150	6.3	7.7	450	265	DV151M016E077ETR ☐☐
	●	*	150	8	6.5	440	270	DV151M016F065ETR ☐☐
	●	●	220	6.3	7.7	430	275	DV221M016E077ETR ☐☐
	●	*	220	8	6.5	410	285	DV221M016F065ETR ☐☐
	●	●	330	8	10.5	250	550	DV331M016F105ETR ☐☐
	●	●	470	8	10.5	220	590	DV471M016F105ETR ☐☐
	●	●	680	10	10.5	160	720	DV681M016G105ETR ☐☐
	●	●	1500	12.5	14	80	1100	DV152M016Z140ETR ☐☐
	●	●	3300	16	17	52	1250	DV332M016J170ETR ☐☐
25	●		6.8	4	5.5	2800	70	DV6R8M025B055ETR ☐☐
	●		10	4	5.5	2100	85	DV100M025B055ETR ☐☐
	●		15	5	5.5	1900	125	DV150M025C055ETR ☐☐
	●		22	5	5.5	1200	145	DV220M025C055ETR ☐☐
	●		22	6.3	5.5	1150	160	DV220M025E055ETR ☐☐
	●		27	6.3	5.5	620	200	DV270M025E055ETR ☐☐
	●		33	5	5.5	1050	160	DV330M025C055ETR ☐☐
	●		33	6.3	5.5	580	220	DV330M025E055ETR ☐☐
	●	●	47	6.3	7.7	540	230	DV470M025E077ETR ☐☐
	●		47	6.3	5.5	560	220	DV470M025E055ETR ☐☐
	●		56	6.3	5.5	540	230	DV560M025E055ETR ☐☐
	●		68	6.3	5.5	480	240	DV680M025E055ETR ☐☐
	●	*	68	8	6.5	450	260	DV680M025F065ETR ☐☐
	●	●	100	6.3	7.7	380	290	DV101M025E077ETR ☐☐
	●	*	100	8	6.5	360	300	DV101M025F065ETR ☐☐
	●	●	150	8	10.5	250	480	DV151M025F105ETR ☐☐
	●	●	220	8	10.5	220	530	DV221M025F105ETR ☐☐
	●	●	330	8	10.5	200	570	DV331M025F105ETR ☐☐
	●	●	470	10	10.5	150	650	DV471M025G105ETR ☐☐

***Consult CapXon for availability**

☐☐ **see description at end of standard ratings**

For further information please contact sales@capxon.org

STANDARD RATINGS

Part number shows blister tape on paper reel

V_R (V)	Standard	Vibration-proof	C_R (µF)	ø D (mm)	L (mm)	Z ▪ Max. Impedance +20°C ▪ 100kHz (mΩ)	I_R ▪ Max. Ripple Current +105°C ▪ 100kHz (mA rms)	CapXon Part Number
25	●	●	1000	12.5	14	80	1100	DV102M025Z140ETR □□
	●	●	2200	16	17	52	1250	DV222M025J170ETR □□
35	●		3.3	4	5.5	2800	80	DV3R3M035B055ETR □□
	●		4.7	4	5.5	2500	85	DV4R7M035B055ETR □□
	●		6.8	4	5.5	2200	88	DV6R8M035B055ETR □□
	●		10	4	5.5	2000	90	DV100M035B055ETR □□
	●		10	5	5.5	1400	125	DV100M035C055ETR □□
	●		15	5	5.5	1200	140	DV150M035C055ETR □□
	●		22	5	5.5	1100	155	DV220M035C055ETR □□
	●		22	6.3	5.5	1050	170	DV220M035E055ETR □□
	●		27	6.3	5.5	600	210	DV270M035E055ETR □□
	●		33	6.3	5.5	540	230	DV330M035E055ETR □□
	●	*	33	8	6.5	510	260	DV330M035F065ETR □□
	●		47	6.3	5.5	530	240	DV470M035E055ETR □□
	●	*	47	8	6.5	490	250	DV470M035F065ETR □□
	●	●	56	6.3	7.7	490	250	DV560M035E077ETR □□
	●	●	68	6.3	7.7	400	265	DV680M035E077ETR □□
	●	●	100	6.3	7.7	380	300	DV101M035E077ETR □□
	●	●	100	8	10.5	280	420	DV101M035F105ETR □□
	●	●	150	8	10.5	240	510	DV151M035F105ETR □□
	●	●	220	8	10.5	210	570	DV221M035F105ETR □□
	●	●	330	10	10.5	150	650	DV331M035G105ETR □□
	●	●	470	12.5	14	80	1100	DV471M035Z140ETR □□
	●	●	680	12.5	14	80	1100	DV681M035Z140ETR □□
	●	●	1500	16	17	52	1250	DV152M035J170ETR □□
50	●		1	4	5.5	4500	55	DV010M050B055ETR □□
	●		2.2	4	5.5	4500	55	DV2R2M050B055ETR □□
	●		3.3	4	5.5	4500	55	DV3R3M050B055ETR □□
	●		4.7	4	5.5	4500	55	DV4R7M050B055ETR □□
	●		6.8	5	5.5	3800	75	DV6R8M050C055ETR □□
	●		10	5	5.5	2800	95	DV100M050C055ETR □□
	●		10	6.3	5.5	2200	130	DV100M050E055ETR □□
	●		15	6.3	5.5	1600	140	DV150M050E055ETR □□
	●		22	6.3	5.5	1300	150	DV220M050E055ETR □□
	●	●	27	6.3	7.7	1200	180	DV270M050E077ETR □□
	●	●	33	6.3	7.7	710	190	DV330M050E077ETR □□
	●	*	33	8	6.5	700	200	DV330M050F065ETR □□
	●	●	47	6.3	7.7	700	230	DV470M050E077ETR □□
	●	*	47	8	6.5	690	240	DV470M050F065ETR □□
	●	●	56	8	10.5	520	300	DV560M050F105ETR □□
	●	●	68	8	10.5	500	320	DV680M050F105ETR □□
	●	●	100	8	10.5	460	350	DV101M050F105ETR □□
	●	●	150	10	10.5	250	600	DV151M050G105ETR □□

***Consult CapXon for availability**

□□ **see description at end of standard ratings**

For further information please contact sales@capxon.org

STANDARD RATINGS

Part number shows blister tape on paper reel

V_R (V)	Standard	Vibration-proof	C_R (µF)	ø D (mm)	L (mm)	Z ▪ Max. Impedance +20°C ▪ 100kHz (mΩ)	I_R ▪ Max. Ripple Current +105°C ▪ 100kHz (mA rms)	CapXon Part Number
50	●	●	220	10	10.5	230	650	DV221M050G105ETR □□
	●	●	330	12.5	14	210	800	DV331M050Z140ETR □□
	●	●	1000	16	17	78	1000	DV102M050J170ETR □□
63	●		4.7	5	5.5	2800	45	DV4R7M063C055ETR □□
	●		10	6.3	5.5	1600	80	DV100M063E055ETR □□
	●	●	22	6.3	7.7	1100	150	DV220M063E077ETR □□
	●	●	33	8	10.5	800	230	DV330M063F105ETR □□
	●	●	47	8	10.5	550	260	DV470M063F105ETR □□
	●	●	68	10	10.5	400	380	DV680M063G105ETR □□
	●	●	100	10	10.5	280	400	DV101M063G105ETR □□
	●	●	100	12.5	14	260	520	DV101M063Z140ETR □□
	●	●	150	12.5	14	200	780	DV151M063Z140ETR □□
	●	●	220	12.5	14	180	810	DV221M063Z140ETR □□
	●	●	470	16	17	85	1390	DV471M063J170ETR □□
80	●		4.7	6.3	5.5	3800	50	DV4R7M080E055ETR □□
	●	●	10	6.3	7.7	3000	70	DV100M080E077ETR □□
	●	●	22	6.3	7.7	1700	110	DV220M080E077ETR □□
	●	●	33	8	10.5	1100	200	DV330M080F105ETR □□
	●	●	47	10	10.5	900	320	DV470M080G105ETR □□
	●	●	68	10	10.5	650	490	DV680M080G105ETR □□
	●	●	100	12.5	14	420	580	DV101M080Z140ETR □□
	●	●	220	16	17	260	930	DV221M080J170ETR □□
100	●	●	10	6.3	7.7	4000	65	DV100M100E077ETR □□
	●	●	22	8	10.5	2000	110	DV220M100F105ETR □□
	●	●	33	10	10.5	1300	180	DV330M100G105ETR □□
	●	●	47	10	10.5	1000	370	DV470M100G105ETR □□
	●	●	47	12.5	14	950	480	DV470M100Z140ETR □□
	●	●	68	12.5	14	600	580	DV680M100Z140ETR □□
	●	●	100	12.5	14	500	620	DV101M100Z140ETR □□
	●	●	220	16	17	280	1050	DV221M100J170ETR □□

□□□: Enter **blank** for Standard package
□□□: Enter **W** for Vibration proof version
□□□: Enter **X** for AEC-Q200
□□□: Enter **XW** for AEC-Q200 and Vibration proof version

For further information please contact sales@capxon.org

DIMENSIONS STANDARD PACKAGE ▪ All dimensions in mm

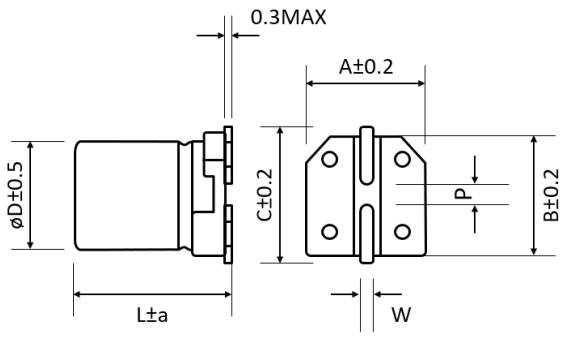

ø D	L	a	A	B	C	W	P±0.2
4	5.5	Max	4.3	4.3	4.9	0.5 to 0.8	1
5	5.5	Max	5.3	5.3	5.9	0.5 to 0.8	1.4
6.3	5.5	0.2	6.6	6.6	7.2	0.5 to 0.8	2.2
6.3	7.7	Max	6.6	6.6	7.2	0.5 to 0.8	2.2
8	6.5	Max	8.3	8.3	9	0.5 to 0.8	2.3
8	10.5	Max	8.3	8.3	9	0.7 to 1.1	3.1
10	10.5	Max	10.3	10.3	11	0.7 to 1.1	4.5
12.5	14	Max	13	13	13.9	1 to 1.4	4.5
16	17	0.5	17	17	18	1 to 1.4	6.6

DIMENSIONS VP PACKAGE (VIBRATION-PROOF) ▪ All dimensions in mm

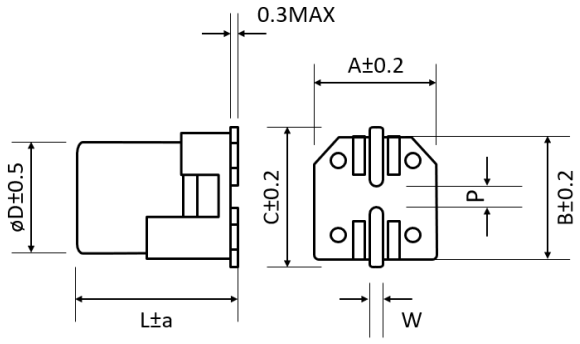

ø D	L	a	A	B	C	W	P±0.2
6.3	7.7	0.5	6.6	6.6	7.2	0.5 to 0.8	2.2
8	6.5	0.5	8.3	8.3	9	0.7 to 1.1	3.1
8	10.5	0.5	8.3	8.3	9	0.7 to 1.1	3.1
10	10.5	0.5	10.5	10.5	11.2	0.7 to 1.1	4.5
12.5	14	0.5	13	13	13.9	1 to 1.4	5.5
16	17	0.5	17	17	18	1 to 1.4	6.6

MULTIPLIER K_f for RIPPLE CURRENT vs. FREQUENCY

C_R (µF) / Frequency (Hz)	50/60	100/120	500	1k	10k	50k ~ 100k
$1 \le C_R \le 10$	0.47	0.59	0.76	0.85	0.97	1
$10 < C_R \le 6800$	0.52	0.65	0.8	0.89	0.97	1

PRECAUTIONS, GUIDELINES AND PACKAGING INFORMATON

Unless otherwise agreed in individual specifications, all products are subject to our “General Precautions and Guidelines” as well as our “Packaging Information”. Please refer to the following links in the table.

General Precautions and Guidelines	Packaging Information Liquid SMD
Page 837	Page 88

For further information please contact sales@capxon.org

DISCLAIMER

All product related data (e.g. specification, statements and general information) are subject to change without any notice. It is necessary that the customer observes all product related technical / application information and handling instructions.

CapXon products are designed and manufactured according to severe quality and safety standards. Under no circumstance, CapXon warrants that any CapXon product is suitable for the purposes intended for your application, even CapXon knows the application. It is customer's duty and obligation to check and make sure that CapXon products are suitable for the purposes intended and select the correct and proper CapXon product. Customers are requested to perform a sufficient validation and reliability evaluation to assure needed safety level and reliability performance by suitable designs and to apply proper safeguards (e.g. redundancies, protective circuits).

Particular operating conditions (ambient temperature, ripple current, voltage, thermal resistance, etc.) as well as storage, production or assembly may affect the performance and the lifetime of the capacitor. Please consult CapXon for lifetime estimation, failure mode considerations or worst-case scenarios according to the product technology, product tolerances / deviations or change of the characteristics of the capacitor due to shipment, storage, handling, production and usage.

For aerospace or military application, life-saving, life-sustaining, safety critical applications or any application where failure may cause severe personal injury or death, please consult us before design-in the capacitor in your application.

Except for the written expressed warranties, CapXon does not impliedly, by assumption or whatever else, warrant, undertake, promise any other warranty or guaranty for any CapXon product.

For further information, please visit our website www.capxongroup.com or contact CapXon directly.

RV SERIES ▪ HIGH VOLTAGE, AUTOMOTIVE 105°C TYPE



KEY FEATURES

AEC-Q 200 · HIGH VOLTAGE · LOW IMPEDANCE

- **ALUMINUM ELECTROLYTIC CAPACITOR** ▪ SMD type
- Endurance: 105°C ▪ 2000 hours up to 5000 hours
- High voltage and low impedance
- Vibration-proof (VP) version (up to 30g) available upon request
- AEC-Q200 version available

HF Halogen Free · MSL 1 · RoHS & REACH COMPLIANT

SPECIFICATIONS

Items		Performance Characteristics	
Operating Temperature Range		-55 ~ +105°C	-40 ~ +105°C
Rated Voltage Range	V_R	6.3 ~ 100V DC	160 ~ 450V DC
Surge Voltage	V_S	($V_R \le 315V$): $V_S = 1.15 \cdot V_R$	($V_R > 315V$): $V_S = 1.10 \cdot V_R$
Capacitance Range	C_R	1 ~ 6800µF	2.2 ~ 68µF
Cap. Tolerance	ΔC	±20% (120Hz ▪ 20°C)	
Leakage Current (20°C ▪ V_R applied)	I_{LEAK}	≤ $0.01 \cdot C_R \cdot V_R$ or 3µA Whichever is greater ▪ After 2 minutes	≤ $0.04 \cdot C_R \cdot V_R$ + 100µA After 1 minute
		[I_{LEAK} (µA) ; C_R (µF) ; V_R (V)]	

Dissipation Factor % (20°C ▪ 120Hz)	tanδ	V_R (V DC)	6.3	10	16	25	35	50	63	80	100	160 ~ 250	>250
		tanδ (%)	22	19	16	14	14	12	10	9	8	15	20

Low Temperature Characteristics at 120Hz	Z ratio max.	V_R (V DC)	6.3	10	16	25	35	50	63	80	100	160 ~ 250	400	450
		Z-25°C/Z+20°C	4	3	2	2	2	2	2	2	2	3	6	6
		Z-40°C/Z+20°C	8	6	4	4	3	3	3	3	3	6	10	15
		Z-55°C/Z+20°C	12	10	6	6	4	4	4	4	4	-	-	-

Lifetime Test			
Endurance 105°C (V_R applied)	Test	**5000 hours**	> Ø 6.3mm
		2000 hours	≤ Ø 6.3mm
	△C/C_R	≤ ±30% of initial measured value	
	tanδ	≤ 300% of initial specified value	
	I_{Leak}	≤ the initial specified value	
Shelf Life 105°C (V_R = 0)	Test	**1000 hours**	
	△C/C_R	≤ ±30% of initial measured value	
	tanδ	≤ 300% of initial specified value	
	I_{Leak}	≤ the initial specified value	
	Before measurement: Restore capacitor to 20°C, apply V_R for 30 min according JIS-C-5101-4		
Resistance to Soldering Heat	The capacitors shall be kept on a hot plate maintained at 250°C for 30 seconds. After removing from the hot plate and restored at room temperature, they meet the characteristic requirements listed below		
	△C/C_R	Within ±10% of initial value	
	tanδ	Less than specified value	
	I_{Leak}	Less than specified value	

For further information please contact sales@capxon.org

STANDARD RATINGS

Part number shows blister tape on paper reel

V_R (V)	Standard	Vibration-proof	C_R (µF)	ø D (mm)	L (mm)	Z ▪ Max. Impedance +20°C ▪ 100kHz (mΩ)	I_R ▪ Max. Ripple Current +105°C ▪ 100kHz (mA rms)	CapXon Part Number
6.3	●		22	4	5.5	1350	80	RV220M6R3B055ETR □□
	●		33	4	5.5	1350	85	RV330M6R3B055ETR □□
	●		47	5	5.5	800	160	RV470M6R3C055ETR □□
	●		100	6.3	5.5	440	240	RV101M6R3E055ETR □□
	●		150	6.3	5.5	440	240	RV151M6R3E055ETR □□
	●	●	220	6.3	7.7	360	280	RV221M6R3E077ETR □□
	●	●	330	6.3	7.7	320	350	RV331M6R3E077ETR □□
	●	●	330	8	10.5	170	450	RV331M6R3F105ETR □□
	●	●	470	8	10.5	170	500	RV471M6R3F105ETR □□
	●	●	680	8	10.5	170	550	RV681M6R3F105ETR □□
	●	●	1000	8	10.5	170	550	RV102M6R3F105ETR □□
	●	●	1500	10	10.5	90	690	RV152M6R3G105ETR □□
	●	●	3300	12.5	14	66	1150	RV332M6R3Z140ETR □□
	●	●	6800	16	17	35	1800	RV682M6R3J170ETR □□
10	●		22	4	5.5	1350	90	RV220M010B055ETR □□
	●		33	5	5.5	800	160	RV330M010C055ETR □□
	●		47	6.3	5.5	440	230	RV470M010E055ETR □□
	●		100	6.3	5.5	440	240	RV101M010E055ETR □□
	●		150	6.3	5.5	440	250	RV151M010E055ETR □□
	●	●	220	6.3	7.7	360	280	RV221M010E077ETR □□
	●	●	330	8	10.5	170	500	RV331M010F105ETR □□
	●	●	470	8	10.5	170	550	RV471M010F105ETR □□
	●	●	680	10	10.5	90	690	RV681M010G105ETR □□
	●	●	1000	10	10.5	90	690	RV102M010G105ETR □□
	●	●	2200	12.5	14	66	1150	RV222M010Z140ETR □□
	●	●	4700	16	17	35	1800	RV472M010J170ETR □□
16	●		10	4	5.5	2100	90	RV100M016B055ETR □□
	●		22	5	5.5	800	150	RV220M016C055ETR □□
	●		33	6.3	5.5	440	230	RV330M016E055ETR □□
	●		47	6.3	5.5	440	230	RV470M016E055ETR □□
	●		100	6.3	5.5	440	255	RV101M016E055ETR □□
	●	●	150	6.3	7.7	360	280	RV151M016E077ETR □□
	●	●	220	6.3	7.7	360	280	RV221M016E077ETR □□
	●	●	330	8	10.5	170	550	RV331M016F105ETR □□
	●	●	470	8	10.5	170	600	RV471M016F105ETR □□
	●	●	470	10	10.5	90	670	RV471M016G105ETR □□
	●	●	680	10	10.5	90	750	RV681M016G105ETR □□
	●	●	1500	12.5	14	66	1150	RV152M016Z140ETR □□
	●	●	3300	16	17	35	1800	RV332M016J170ETR □□
25	●		10	4	5.5	2100	90	RV100M025B055ETR □□
	●		22	5	5.5	800	150	RV220M025C055ETR □□
	●		33	6.3	5.5	440	230	RV330M025E055ETR □□
	●		47	6.3	5.5	440	230	RV470M025E055ETR □□
	●	●	100	6.3	7.7	360	300	RV101M025E077ETR □□

□□ **see description at end of standard ratings**

STANDARD RATINGS

Part number shows blister tape on paper reel

V_R (V)	Standard	Vibration-proof	C_R (µF)	ø D (mm)	L (mm)	Z ▪ Max. Impedance +20°C ▪ 100kHz (mΩ)	I_R ▪ Max. Ripple Current +105°C ▪ 100kHz (mA rms)	CapXon Part Number
25	●	●	150	8	10.5	170	500	RV151M025F105ETR □□
	●	●	220	8	10.5	170	550	RV221M025F105ETR □□
	●	●	330	8	10.5	170	600	RV331M025F105ETR □□
	●	●	470	10	10.5	90	670	RV471M025G105ETR □□
	●	●	1000	12.5	14	66	1150	RV102M025Z140ETR □□
	●	●	2200	16	17	35	1800	RV222M025J170ETR □□
35	●		4.7	4	5.5	1900	90	RV4R7M035B055ETR □□
	●		10	5	5.5	800	150	RV100M035C055ETR □□
	●		22	6.3	5.5	440	230	RV220M035E055ETR □□
	●		33	6.3	5.5	440	230	RV330M035E055ETR □□
	●		47	6.3	5.5	440	240	RV470M035E055ETR □□
	●	●	100	8	10.5	170	450	RV101M035F105ETR □□
	●	●	150	8	10.5	170	550	RV151M035F105ETR □□
	●	●	220	8	10.5	160	600	RV221M035F105ETR □□
	●	●	220	10	10.5	90	670	RV221M035G105ETR □□
	●	●	330	10	10.5	80	850	RV331M035G105ETR □□
	●	●	470	12.5	14	66	1150	RV471M035Z140ETR □□
	●	●	680	12.5	14	66	1150	RV681M035Z140ETR □□
	●	●	1000	16	17	48	1800	RV102M035J170ETR □□
	●	●	1500	16	17	48	1800	RV152M035J170ETR □□
50	●		1	4	5.5	4400	60	RV010M050B055ETR □□
	●		2.2	4	5.5	3900	60	RV2R2M050B055ETR □□
	●		3.3	4	5.5	3900	60	RV3R3M050B055ETR □□
	●		4.7	4	5.5	3900	75	RV4R7M050B055ETR □□
	●		4.7	5	5.5	1520	85	RV4R7M050C055ETR □□
	●		10	6.3	5.5	1400	165	RV100M050E055ETR □□
	●		22	6.3	5.5	1200	165	RV220M050E055ETR □□
	●	●	33	6.3	7.7	680	185	RV330M050E077ETR □□
	●	●	47	6.3	7.7	680	185	RV470M050E077ETR □□
	●	●	68	8	10.5	340	300	RV680M050F105ETR □□
	●	●	100	8	10.5	340	350	RV101M050F105ETR □□
	●	●	100	10	10.5	250	555	RV101M050G105ETR □□
	●	●	150	10	10.5	250	555	RV151M050G105ETR □□
	●	●	220	10	10.5	230	600	RV221M050G105ETR □□
	●	●	470	16	17	73	1610	RV471M050J170ETR □□
	●	●	680	16	17	73	1610	RV681M050J170ETR □□
	●	●	1000	16	17	73	1610	RV102M050J170ETR □□
63	●		4.7	5	5.5	2600	50	RV4R7M063C055ETR □□
	●		10	6.3	5.5	1500	80	RV100M063E055ETR □□
	●	●	22	6.3	7.7	1000	120	RV220M063E077ETR □□
	●	●	33	8	10.5	700	250	RV330M063F105ETR □□
	●	●	47	8	10.5	650	280	RV470M063F105ETR □□
	●	●	68	10	10.5	380	400	RV680M063G105ETR □□
	●	●	100	10	10.5	240	420	RV101M063G105ETR □□

□□ **see description at end of standard ratings**

For further information please contact sales@capxon.org

STANDARD RATINGS

Part number shows blister tape on paper reel

V_R (V)	Standard	Vibration-proof	C_R (µF)	ø D (mm)	L (mm)	Z ▪ Max. Impedance +20°C ▪ 100kHz (mΩ)	I_R ▪ Max. Ripple Current +105°C ▪ 100kHz (mA rms)	CapXon Part Number
63	●	●	100	12.5	14	220	540	RV101M063Z140ETR □□
	●	●	150	12.5	14	180	800	RV151M063Z140ETR □□
	●	●	220	12.5	14	160	830	RV221M063Z140ETR □□
	●	●	470	16	17	82	1410	RV471M063J170ETR □□
80	●	●	10	6.3	7.7	2600	60	RV100M080E077ETR □□
	●	●	22	8	10.5	1700	130	RV220M080F105ETR □□
	●	●	33	8	10.5	1600	140	RV330M080F105ETR □□
	●	●	47	10	10.5	700	210	RV470M080G105ETR □□
	●	●	68	12.5	14	500	500	RV680M080Z140ETR □□
	●	●	100	12.5	14	450	550	RV101M080Z140ETR □□
	●	●	150	12.5	14	420	600	RV151M080Z140ETR □□
	●	●	220	16	17	380	700	RV221M080J170ETR □□
	●	●	330	16	17	320	800	RV331M080J170ETR □□
100	●	●	10	6.3	7.7	3900	65	RV100M100E077ETR □□
	●	●	22	8	10.5	1900	130	RV220M100F105ETR □□
	●	●	33	10	10.5	1250	200	RV330M100G105ETR □□
	●	●	47	10	10.5	950	390	RV470M100G105ETR □□
	●	●	47	12.5	14	900	500	RV470M100Z140ETR □□
	●	●	68	12.5	14	570	600	RV680M100Z140ETR □□
	●	●	100	12.5	14	480	640	RV101M100Z140ETR □□
	●	●	100	16	17	450	800	RV101M100J170ETR □□
160	●	●	10	8	10.5	-	88	RV100M160F105ETR □□
	●	●	18	10	10.5	-	104	RV180M160G105ETR □□
	●	●	22	10	10.5	-	112	RV220M160G105ETR □□
	●	●	27	12.5	14	-	136	RV270M160Z140ETR □□
	●	●	33	12.5	14	-	152	RV330M160Z140ETR □□
	●	●	47	16	17	-	416	RV470M160J170ETR □□
	●	●	68	16	17	-	480	RV680M160J170ETR □□
200	●	●	10	12.5	14	-	128	RV100M200Z140ETR □□
	●	●	22	12.5	14	-	168	RV220M200Z140ETR □□
	●	●	27	12.5	14	-	184	RV270M200Z140ETR □□
	●	●	33	16	17	-	352	RV330M200J170ETR □□
	●	●	47	16	17	-	416	RV470M200J170ETR □□
250	●	●	4.7	8	10.5	-	80	RV4R7M250F105ETR □□
	●	●	4.7	12.5	14	-	104	RV4R7M250Z140ETR □□
	●	●	6.8	10	10.5	-	96	RV6R8M250G105ETR □□
	●	●	6.8	12.5	14	-	125	RV6R8M250Z140ETR □□
	●	●	10	10	10.5	-	120	RV100M250G105ETR □□
	●	●	15	12.5	14	-	192	RV150M250Z140ETR □□
	●	●	22	16	17	-	288	RV220M250J170ETR □□
400	●	●	2.2	8	10.5	-	40	RV2R2M400F105ETR □□
	●	●	3.3	8	10.5	-	48	RV3R3M400F105ETR □□
	●	●	3.9	10	10.5	-	56	RV3R9M400G105ETR □□
	●	●	4.7	10	10.5	-	64	RV4R7M400G105ETR □□

□□ **see description at end of standard ratings**

For further information please contact sales@capxon.org

STANDARD RATINGS

Part number shows blister tape on paper reel

V_R (V)	Standard	Vibration-proof	C_R (µF)	ø D (mm)	L (mm)	Z ▪ Max. Impedance +20°C ▪ 100kHz (mΩ)	I_R ▪ Max. Ripple Current +105°C ▪ 100kHz (mA rms)	CapXon Part Number
400	●	●	6.8	12.5	14	-	96	RV6R8M400Z140ETR [ ][ ]
	●	●	8.2	12.5	14	-	104	RV8R2M400Z140ETR [ ][ ]
	●	●	10	12.5	14	-	112	RV100M400Z140ETR [ ][ ]
	●	●	12	16	17	-	152	RV120M400J170ETR [ ][ ]
	●	●	22	16	17	-	192	RV220M400J170ETR [ ][ ]
450	●	●	3.3	10	10.5	-	64	RV3R3M450G105ETR [ ][ ]
	●	●	3.9	10	10.5	-	64	RV3R9M450G105ETR [ ][ ]
	●	●	4.7	12.5	14	-	80	RV4R7M450Z140ETR [ ][ ]
	●	●	6.8	12.5	14	-	96	RV6R8M450Z140ETR [ ][ ]
	●	●	8.2	12.5	14	-	104	RV8R2M450Z140ETR [ ][ ]
	●	●	10	12.5	14	-	112	RV100M450Z140ETR [ ][ ]
	●	●	12	16	17	-	144	RV120M450J170ETR [ ][ ]
	●	●	15	16	17	-	160	RV150M450J170ETR [ ][ ]

[ ][ ][ ]: Enter **blank** for Standard package
[ ][ ][ ]: Enter **X** for AEC-Q200
[ ][ ][ ]: Enter **W** for Vibration proof version
[ ][ ][ ]: Enter **XW** for AEC-Q200 and Vibration proof version

DIMENSIONS STANDARD PACKAGE ▪ All dimensions in mm

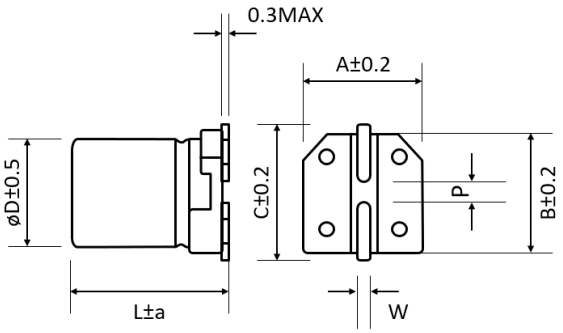

ø D	L	a	A	B	C	W	P±0.2
4	5.5	Max	4.3	4.3	4.9	0.5 to 0.8	1
5	5.5	Max	5.3	5.3	5.9	0.5 to 0.8	1.4
6.3	5.5	0.2	6.6	6.6	7.2	0.5 to 0.8	2.2
6.3	7.7	Max	6.6	6.6	7.2	0.5 to 0.8	2.2
8	6.5	Max	8.3	8.3	9	0.5 to 0.8	2.3
8	10.5	Max	8.3	8.3	9	0.7 to 1.1	3.1
10	10.5	Max	10.3	10.3	11	0.7 to 1.1	4.5
12.5	14	Max	13	13	13.9	1 to 1.4	4.5
16	17	0.5	17	17	18	1 to 1.4	6.6

DIMENSIONS VP PACKAGE (VIBRATION-PROOF) ▪ All dimensions in mm

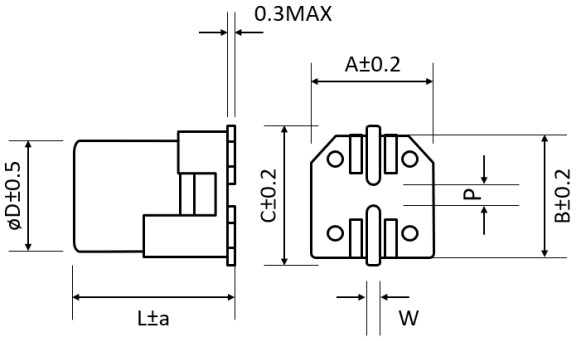

ø D	L	a	A	B	C	W	P±0.2
6.3	7.7	0.5	6.6	6.6	7.2	0.5 to 0.8	2.2
8	6.5	0.5	8.3	8.3	9	0.7 to 1.1	3.1
8	10.5	0.5	8.3	8.3	9	0.7 to 1.1	3.1
10	10.5	0.5	10.5	10.5	11.2	0.7 to 1.1	4.5
12.5	14	0.5	13	13	13.9	1 to 1.4	5.5
16	17	0.5	17	17	18	1 to 1.4	6.6

For further information please contact sales@capxon.org

MULTIPLIER K_f for RIPPLE CURRENT vs. FREQUENCY

< 160V

C_R (µF) / Frequency (Hz)	50/60	100/120	500	1k	10k	50k ~ 100k
$1 \le C_R \le 10$	0.47	0.59	0.76	0.85	0.97	1
$10 < C_R \le 6800$	0.52	0.65	0.8	0.89	0.97	1

≥ 160V

C_R (µF) / Frequency (Hz)	50/60	100/120	400	1k	10k	50k ~ 100k
$10 \le C_R \le 68$	0.5	0.63	0.78	0.88	0.97	1

PRECAUTIONS, GUIDELINES AND PACKAGING INFORMATON

Unless otherwise agreed in individual specifications, all products are subject to our “General Precautions and Guidelines” as well as our “Packaging Information”. Please refer to the following links in the table.

General Precautions and Guidelines	Packaging Information Liquid SMD
Page 837	Page 88

DISCLAIMER

All product related data (e.g. specification, statements and general information) are subject to change without any notice. It is necessary that the customer observes all product related technical / application information and handling instructions.

CapXon products are designed and manufactured according to severe quality and safety standards. Under no circumstance, CapXon warrants that any CapXon product is suitable for the purposes intended for your application, even CapXon knows the application. It is customer's duty and obligation to check and make sure that CapXon products are suitable for the purposes intended and select the correct and proper CapXon product. Customers are requested to perform a sufficient validation and reliability evaluation to assure needed safety level and reliability performance by suitable designs and to apply proper safeguards (e.g. redundancies, protective circuits).

Particular operating conditions (ambient temperature, ripple current, voltage, thermal resistance, etc.) as well as storage, production or assembly may affect the performance and the lifetime of the capacitor. Please consult CapXon for lifetime estimation, failure mode considerations or worst-case scenarios according to the product technology, product tolerances / deviations or change of the characteristics of the capacitor due to shipment, storage, handling, production and usage.

For aerospace or military application, life-saving, life-sustaining, safety critical applications or any application where failure may cause severe personal injury or death, please consult us before design-in the capacitor in your application.

Except for the written expressed warranties, CapXon does not impliedly, by assumption or whatever else, warrant, undertake, promise any other warranty or guaranty for any CapXon product.

For further information, please visit our website www.capxongroup.com or contact CapXon directly.

MV SERIES ▪ LONG LIFE 105°C TYPE



KEY FEATURES

LONG LIFE

- **ALUMINUM ELECTROLYTIC CAPACITOR** ▪ SMD type
- Endurance: 105°C ▪ 5000 hours
- Long life type
- Small dimensions
- Ideal for high density mounting

HF Halogen Free · MSL 1 · RoHS & REACH COMPLIANT

SPECIFICATIONS

Items		Performance Characteristics						
Operating Temperature Range		-40 ~ +105°C						
Rated Voltage Range	V_R	6.3 ~ 50V DC						
Surge Voltage	V_S	$V_S = 1.15 \cdot V_R$						
Capacitance Range	C_R	0.1 ~ 1000µF						
Cap. Tolerance	ΔC	±20% (120Hz ▪ 20°C)						
Leakage Current (20°C ▪ V_R applied)	I_{LEAK}	≤ $0.01 \cdot C_R \cdot V_R$ or 3µA, whichever is greater ▪ After 2 minutes [I_{LEAK} (µA) ; C_R (µF) ; V_R (V)]						
Dissipation Factor % (20°C ▪ 120Hz)	tanδ	V_R (V DC)	6.3	10	16	25	35	50
		tanδ	32	28	22	16	13	12
Low Temperature Characteristics at 120Hz	Z ratio max.	V_R (V DC)	6.3	10	16	25	35	50
		Z-25°C/Z+20°C	4	3	2	2	2	2
		Z-40°C/Z+20°C	10	7	5	3	3	3

Lifetime Test		
Endurance 105°C (V_R applied)	Test	**5000 hours**
	△C/C_R	≤ ±30% of initial measured value
	tanδ	≤ 300% of initial specified value
	I_{Leak}	≤ the initial specified value
Shelf Life 105°C (V_R = 0)	Test	**1000 hours**
	△C/C_R	≤ ±30% of initial measured value
	tanδ	≤ 300% of initial specified value
	I_{Leak}	≤ the initial specified value
	Before measurement: Restore capacitor to 20°C, apply V_R for 30 min according JIS-C-5101-4	
Resistance to Soldering Heat	The capacitors shall be kept on a hot plate maintained at 250°C for 30 seconds. After removing from the hot plate and restored at room temperature, they meet the characteristic requirements listed below	
	△C/C_R	Within ±10% of initial value
	tanδ	Less than specified value
	I_{Leak}	Less than specified value

For further information please contact sales@capxon.org

STANDARD RATINGS

Part number shows blister tape on paper reel

V_R (V)	C_R (µF)	ø D (mm)	L (mm)	I_R ▪ Max. Ripple Current +105°C ▪ 120Hz (mA rms)	CapXon Part Number
6.3	22	4	5.5	22	MV220M6R3B055ETR
	33	5	5.5	32	MV330M6R3C055ETR
	47	5	5.5	36	MV470M6R3C055ETR
	100	6.3	5.5	60	MV101M6R3E055ETR
	220	6.3	7.7	110	MV221M6R3E077ETR
	330	8	10.5	160	MV331M6R3F105ETR
	470	10	10.5	260	MV471M6R3G105ETR
	1000	10	10.5	340	MV102M6R3G105ETR
10	22	5	5.5	28	MV220M010C055ETR
	33	5	5.5	34	MV330M010C055ETR
	47	6.3	5.5	48	MV470M010E055ETR
	100	6.3	7.7	79	MV101M010E077ETR
	220	8	10.5	140	MV221M010F105ETR
	330	8	10.5	210	MV331M010F105ETR
	330	10	10.5	240	MV331M010G105ETR
	470	8	10.5	250	MV471M010F105ETR
	470	10	10.5	280	MV471M010G105ETR
	1000	10	10.5	410	MV102M010G105ETR
16	10	4	5.5	17	MV100M016B055ETR
	22	4	5.5	26	MV220M016B055ETR
	22	5	5.5	30	MV220M016C055ETR
	33	6.3	5.5	44	MV330M016E055ETR
	47	6.3	5.5	50	MV470M016E055ETR
	100	6.3	7.7	81	MV101M016E077ETR
	220	8	10.5	190	MV221M016F105ETR
	220	10	10.5	216	MV221M016G105ETR
	330	10	10.5	300	MV331M016G105ETR
	470	10	10.5	320	MV471M016G105ETR
25	4.7	4	5.5	13	MV4R7M025B055ETR
	10	4	5.5	23	MV100M025B055ETR
	22	5	5.5	35	MV220M025C055ETR
	22	6.3	5.5	40	MV220M025E055ETR
	33	6.3	5.5	48	MV330M025E055ETR
	47	6.3	7.7	63	MV470M025E077ETR
	100	6.3	7.7	88	MV101M025E077ETR
	100	8	10.5	116	MV101M025F105ETR
	220	10	10.5	240	MV221M025G105ETR
	330	10	10.5	375	MV331M025G105ETR
	470	10	10.5	450	MV471M025G105ETR
35	4.7	4	5.5	15	MV4R7M035B055ETR
	10	5	5.5	25	MV100M035C055ETR
	22	6.3	5.5	42	MV220M035E055ETR
	33	6.3	7.7	57	MV330M035E077ETR
	47	8	10.5	92	MV470M035F105ETR
	100	8	10.5	130	MV101M035F105ETR

STANDARD RATINGS

Part number shows blister tape on paper reel

V_R (V)	C_R (µF)	ø D (mm)	L (mm)	I_R ▪ Max. Ripple Current +105°C ▪ 120Hz (mA rms)	CapXon Part Number
35	100	10	10.5	150	MV101M035G105ETR
	220	10	10.5	280	MV221M035G105ETR
	330	10	10.5	390	MV331M035G105ETR
50	0.1	4	5.5	1	MV0R1M050B055ETR
	0.22	4	5.5	2.6	MVR22M050B055ETR
	0.33	4	5.5	3.2	MVR33M050B055ETR
	0.47	4	5.5	3.8	MVR47M050B055ETR
	1	4	5.5	6.2	MV010M050B055ETR
	2.2	4	5.5	11	MV2R2M050B055ETR
	3.3	4	5.5	14	MV3R3M050B055ETR
	4.7	5	5.5	19	MV4R7M050C055ETR
	10	6.3	5.5	30	MV100M050E055ETR
	22	6.3	7.7	52	MV220M050E077ETR
	33	8	10.5	80	MV330M050F105ETR
	47	8	10.5	95	MV470M050F105ETR
	100	10	10.5	160	MV101M050G105ETR

DIMENSIONS STANDARD PACKAGE ▪ All dimensions in mm

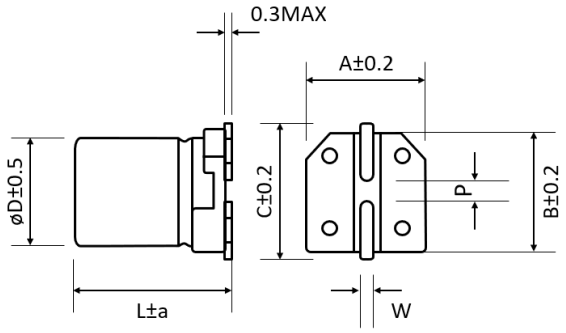

ø D	L	a	A	B	C	W	P±0.2
4	5.5	Max	4.3	4.3	4.9	0.5 to 0.8	1
5	5.5	Max	5.3	5.3	5.9	0.5 to 0.8	1.4
6.3	5.5	0.2	6.6	6.6	7.2	0.5 to 0.8	2.2
6.3	7.7	Max	6.6	6.6	7.2	0.5 to 0.8	2.2
8	10.5	Max	8.3	8.3	9	0.7 to 1.1	3.1
10	10.5	Max	10.3	10.3	11	0.7 to 1.1	4.5

MULTIPLIER K_f for RIPPLE CURRENT vs. FREQUENCY

C_R (µF) / Frequency (Hz)	50/60	100/120	500	1k	≥ 10k
$0.1 \le C_R \le 100$	0.8	1	1.2	1.3	1.5
$100 < C_R \le 1000$	0.8	1	1.1	1.15	1.2

For further information please contact sales@capxon.org

PRECAUTIONS, GUIDELINES AND PACKAGING INFORMATON

Unless otherwise agreed in individual specifications, all products are subject to our “General Precautions and Guidelines” as well as our “Packaging Information”. Please refer to the following links in the table.

General Precautions and Guidelines	Packaging Information Liquid SMD
Page 837	Page 88

DISCLAIMER

All product related data (e.g. specification, statements and general information) are subject to change without any notice. It is necessary that the customer observes all product related technical / application information and handling instructions.

CapXon products are designed and manufactured according to severe quality and safety standards. Under no circumstance, CapXon warrants that any CapXon product is suitable for the purposes intended for your application, even CapXon knows the application. It is customer's duty and obligation to check and make sure that CapXon products are suitable for the purposes intended and select the correct and proper CapXon product. Customers are requested to perform a sufficient validation and reliability evaluation to assure needed safety level and reliability performance by suitable designs and to apply proper safeguards (e.g. redundancies, protective circuits).

Particular operating conditions (ambient temperature, ripple current, voltage, thermal resistance, etc.) as well as storage, production or assembly may affect the performance and the lifetime of the capacitor. Please consult CapXon for lifetime estimation, failure mode considerations or worst-case scenarios according to the product technology, product tolerances / deviations or change of the characteristics of the capacitor due to shipment, storage, handling, production and usage.

For aerospace or military application, life-saving, life-sustaining, safety critical applications or any application where failure may cause severe personal injury or death, please consult us before design-in the capacitor in your application.

Except for the written expressed warranties, CapXon does not impliedly, by assumption or whatever else, warrant, undertake, promise any other warranty or guaranty for any CapXon product.

For further information, please visit our website www.capxongroup.com or contact CapXon directly.

CV SERIES ▪ LONG LIFE, AUTOMOTIVE 105°C TYPE

KEY FEATURES

AEC-Q 200 · LONG LIFE · LOW IMPEDANCE



- **ALUMINUM ELECTROLYTIC CAPACITOR** ▪ SMD type
- Endurance: 105°C ▪ 7000 hours
- Low impedance and high ripple current
- Vibration-proof (VP) version (up to 30g) available upon request
- AEC-Q200 version available

HF Halogen Free · MSL 1 · RoHS & REACH COMPLIANT

SPECIFICATIONS

Items		Performance Characteristics						
Operating Temperature Range		-40 ~ +105°C						
Rated Voltage Range	V_R	6.3 ~ 50V DC						
Surge Voltage	V_S	$V_S = 1.15 \cdot V_R$						
Capacitance Range	C_R	22 ~ 1500µF						
Cap. Tolerance	ΔC	±20% (120Hz ▪ 20°C)						
Leakage Current (20°C ▪ V_R applied)	I_{LEAK}	≤ $0.01 \cdot C_R \cdot V_R$ or 3µA, whichever is greater ▪ After 2 minutes [I_{LEAK} (µA) ; C_R (µF) ; V_R (V)]						
Dissipation Factor % (20°C ▪ 120Hz)	tanδ	V_R (V DC)	6.3	10	16	25	35	50
		tanδ	32	28	26	16	14	14
Low Temperature Characteristics at 120Hz	Z ratio max.	V_R (V DC)	6.3	10	16	25	35	50
		Z-25°C/Z+20°C	4	3	2	2	2	2
		Z-40°C/Z+20°C	8	6	4	4	3	3

Lifetime Test		
Endurance 105°C (V_R applied)	Test	**7000 hours**
	$\triangle C/C_R$	≤ ±30% of initial measured value
	tanδ	≤ 300% of initial specified value
	I_{Leak}	≤ the initial specified value
Shelf Life 105°C (V_R = 0)	Test	**1000 hours**
	$\triangle C/C_R$	≤ ±30% of initial measured value
	tanδ	≤ 300% of initial specified value
	I_{Leak}	≤ the initial specified value
	Before measurement: Restore capacitor to 20°C, apply V_R for 30 min according JIS-C-5101-4	
Resistance to Soldering Heat	The capacitors shall be kept on a hot plate maintained at 250°C for 30 seconds. After removing from the hot plate and restored at room temperature, they meet the characteristic requirements listed below	
	$\triangle C/C_R$	Within ±10% of initial value
	tanδ	Less than specified value
	I_{Leak}	Less than specified value

For further information please contact sales@capxon.org

STANDARD RATINGS

Part number shows blister tape on paper reel

V_R (V)	Standard	Vibration-proof	C_R (µF)	ø D (mm)	L (mm)	Z ▪ Max. Impedance +20°C ▪ 100kHz (mΩ)	I_R ▪ Max. Ripple Current +105°C ▪ 100kHz (mA rms)	CapXon Part Number
6.3	●	●	100	6.3	7.7	1100	140	CV101M6R3E077ETR □□
	●	●	150	6.3	7.7	900	180	CV151M6R3E077ETR □□
	●	●	220	6.3	7.7	750	230	CV221M6R3E077ETR □□
	●	●	330	8	10.5	500	400	CV331M6R3F105ETR □□
	●	●	470	8	10.5	220	600	CV471M6R3F105ETR □□
	●	●	680	10	10.5	200	700	CV681M6R3G105ETR □□
	●	●	1000	12.5	14	100	1100	CV102M6R3Z140ETR □□
	●	●	1500	16	17	80	1500	CV152M6R3J170ETR □□
10	●	●	100	6.3	7.7	1100	140	CV101M010E077ETR □□
	●	●	150	6.3	7.7	900	180	CV151M010E077ETR □□
	●	●	220	6.3	7.7	750	230	CV221M010E077ETR □□
	●	●	330	8	10.5	500	400	CV331M010F105ETR □□
	●	●	470	8	10.5	220	600	CV471M010F105ETR □□
	●	●	680	10	10.5	200	700	CV681M010G105ETR □□
	●	●	1000	12.5	14	100	1100	CV102M010Z140ETR □□
	●	●	1500	16	17	80	1500	CV152M010J170ETR □□
16	●	●	100	6.3	7.7	1100	140	CV101M016E077ETR □□
	●	●	150	8	10.5	600	250	CV151M016F105ETR □□
	●	●	220	8	10.5	400	280	CV221M016F105ETR □□
	●	●	330	8	10.5	220	600	CV331M016F105ETR □□
	●	●	470	8	10.5	220	600	CV471M016F105ETR □□
	●	●	470	10	10.5	160	850	CV471M016G105ETR □□
	●	●	680	12.5	14	100	1100	CV681M016Z140ETR □□
	●	●	1000	16	17	80	1500	CV102M016J170ETR □□
25	●	●	22	6.3	7.7	1500	95	CV220M025E077ETR □□
	●	●	33	6.3	7.7	1300	120	CV330M025E077ETR □□
	●	●	47	6.3	7.7	1100	140	CV470M025E077ETR □□
	●	●	100	8	10.5	700	280	CV101M025F105ETR □□
	●	●	150	8	10.5	600	380	CV151M025F105ETR □□
	●	●	220	8	10.5	220	600	CV221M025F105ETR □□
	●	●	330	8	10.5	200	650	CV331M025F105ETR □□
	●	●	390	10	10.5	190	750	CV391M025G105ETR □□
	●	●	470	10	10.5	160	850	CV471M025G105ETR □□
	●	●	680	12.5	14	100	1100	CV681M025Z140ETR □□
	●	●	1000	16	17	80	1500	CV102M025J170ETR □□
35	●	●	47	6.3	7.7	1000	230	CV470M035E077ETR □□
	●	●	100	8	10.5	220	600	CV101M035F105ETR □□
	●	●	220	10	10.5	160	850	CV221M035G105ETR □□
	●	●	330	12.5	14	100	1100	CV331M035Z140ETR □□
	●	●	470	16	17	80	1500	CV471M035J170ETR □□

□□ **see description at end of standard ratings**

For further information please contact sales@capxon.org

STANDARD RATINGS

Part number shows blister tape on paper reel

V_R (V)	Standard	Vibration-proof	C_R (µF)	ø D (mm)	L (mm)	Z ▪ Max. Impedance +20°C ▪ 100kHz (mΩ)	I_R ▪ Max. Ripple Current +105°C ▪ 100kHz (mA rms)	CapXon Part Number
50	●	●	47	8	10.5	530	350	CV470M050F105ETR
	●	●	100	8	10.5	530	350	CV101M050F105ETR
	●	●	100	10	10.5	510	400	CV101M050G105ETR
	●	●	150	10	10.5	480	450	CV151M050G105ETR
	●	●	220	12.5	14	400	850	CV221M050Z140ETR
	●	●	330	16	17	300	1100	CV331M050J170ETR

[ ][ ][ ]: Enter **blank** for Standard package
[ ][ ][ ]: Enter **X** for AEC-Q200
[ ][ ]: Enter **W** for Vibration proof version
[ ][ ]: Enter **XW** for AEC-Q200 and Vibration proof version

DIMENSIONS STANDARD PACKAGE ▪ All dimensions in mm

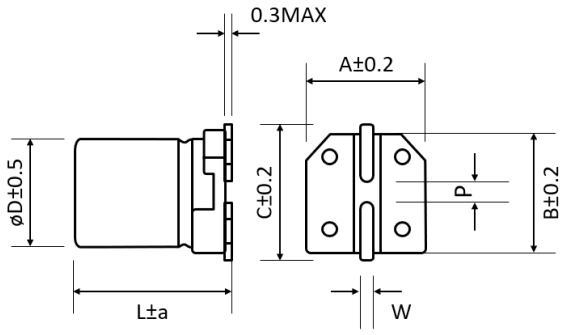

ø D	L	a	A	B	C	W	P±0.2
6.3	7.7	Max	6.6	6.6	7.2	0.5 to 0.8	2.2
8	10.5	Max	8.3	8.3	9	0.7 to 1.1	3.1
10	10.5	Max	10.3	10.3	11	0.7 to 1.1	4.5
12.5	14	Max	13	13	13.9	1 to 1.4	4.5
16	17	0.5	17	17	18	1 to 1.4	6.6

DIMENSIONS VP PACKAGE (VIBRATION-PROOF) ▪ All dimensions in mm

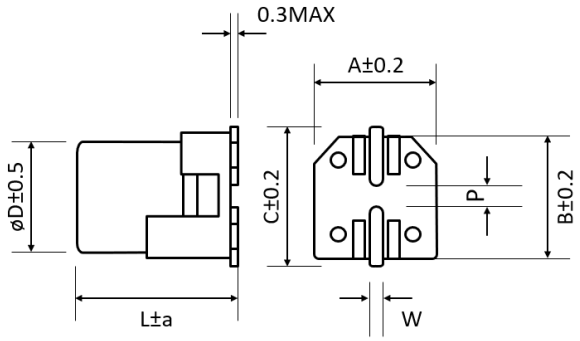

ø D	L	a	A	B	C	W	P±0.2
6.3	7.7	0.5	6.6	6.6	7.2	0.5 to 0.8	2.2
8	10.5	0.5	8.3	8.3	9	0.7 to 1.1	3.1
10	10.5	0.5	10.5	10.5	11.2	0.7 to 1.1	4.5
12.5	14	0.5	13	13	13.9	1 to 1.4	5.5
16	17	0.5	17	17	18	1 to 1.4	6.6

MULTIPLIER K_f for RIPPLE CURRENT vs. FREQUENCY

C_R (µF) / Frequency (Hz)	50/60	100/120	500	1k	10k ~ 100k
$22 \le C_R \le 100$	0.53	0.67	0.8	0.87	1
$100 < C_R \le 1500$	0.67	0.83	0.92	0.96	1

For further information please contact sales@capxon.org

PRECAUTIONS, GUIDELINES AND PACKAGING INFORMATON

Unless otherwise agreed in individual specifications, all products are subject to our “General Precautions and Guidelines” as well as our “Packaging Information”. Please refer to the following links in the table.

General Precautions and Guidelines	Packaging Information Liquid SMD
Page 837	Page 88

DISCLAIMER

All product related data (e.g. specification, statements and general information) are subject to change without any notice. It is necessary that the customer observes all product related technical / application information and handling instructions.

CapXon products are designed and manufactured according to severe quality and safety standards. Under no circumstance, CapXon warrants that any CapXon product is suitable for the purposes intended for your application, even CapXon knows the application. It is customer's duty and obligation to check and make sure that CapXon products are suitable for the purposes intended and select the correct and proper CapXon product. Customers are requested to perform a sufficient validation and reliability evaluation to assure needed safety level and reliability performance by suitable designs and to apply proper safeguards (e.g. redundancies, protective circuits).

Particular operating conditions (ambient temperature, ripple current, voltage, thermal resistance, etc.) as well as storage, production or assembly may affect the performance and the lifetime of the capacitor. Please consult CapXon for lifetime estimation, failure mode considerations or worst-case scenarios according to the product technology, product tolerances / deviations or change of the characteristics of the capacitor due to shipment, storage, handling, production and usage.

For aerospace or military application, life-saving, life-sustaining, safety critical applications or any application where failure may cause severe personal injury or death, please consult us before design-in the capacitor in your application.

Except for the written expressed warranties, CapXon does not impliedly, by assumption or whatever else, warrant, undertake, promise any other warranty or guaranty for any CapXon product.

For further information, please visit our website www.capxongroup.com or contact CapXon directly.

TV SERIES ▪ HIGH TEMP., AUTOMOTIVE 125°C TYPE



KEY FEATURES

AEC-Q 200 · HIGH VIBRATION · °C HIGH TEMPERATURE

- **ALUMINUM ELECTROLYTIC CAPACITOR** ▪ SMD type
- Endurance: 125°C ▪ 1000 hours up to 2000 hours
- Especially for applications with high ambient temperatures
- Vibration-proof (VP) version (up to 30g) available upon request
- AEC-Q200 version available

HF Halogen Free · MSL 1 · RoHS & REACH COMPLIANT

SPECIFICATIONS

Items		Performance Characteristics									
Operating Temperature Range		-40 ~ +125°C									
Rated Voltage Range	V_R	10 ~ 50V DC					160 ~ 450V DC				
Surge Voltage	V_S	($V_R \le 315V$): $V_S = 1.15 \cdot V_R$					($V_R > 315V$): $V_S = 1.10 \cdot V_R$				
Capacitance Range	C_R	10 ~ 330µF					1 ~ 18µF				
Cap. Tolerance	ΔC	±20% (120Hz ▪ 20°C)									
Leakage Current (20°C ▪ V_R applied)	I_{LEAK}	≤ $0.03 \cdot C_R \cdot V_R$ or 3µA Whichever is greater ▪ After 1 minute					≤ $0.04 \cdot C_R \cdot V_R$ + 100µA After 1 minute				
		[I_{LEAK} (µA) ; C_R (µF) ; V_R (V)]									
Dissipation Factor % (20°C ▪ 120Hz)	tanδ	V_R (V DC)	10	16	25	35	50	160	200	250	400	450
		tanδ (%)	32	24	21	18	18	20	20	25	25	30
Low Temperature Characteristics at 120Hz	Z ratio max.	V_R (V DC)	10	16	25	35	50	160	200	250	400	450
		Z-25°C/Z+20°C	12	8	6	4	4	8	8	8	12	15
		Z-40°C/Z+20°C	14	8	6	4	4	-	-	-	-	-

Lifetime Test			
Endurance 125°C (V_R applied)	Test	**2000 hours**	Ø 8 x 10.5mm & Ø 10 x 10.5mm
		1000 hours	Ø 6.3 x 7.7mm & Ø 8 x 6.5mm
	△C/C_R	≤ ±30% of initial measured value	
	tanδ	≤ 300% of initial specified value	
	I_{Leak}	≤ the initial specified value	
Shelf Life 125°C (V_R = 0)	Test	**1000 hours**	
	△C/C_R	≤ ±30% of initial measured value	
	tanδ	≤ 300% of initial specified value	
	I_{Leak}	≤ the initial specified value	
	Before measurement: Restore capacitor to 20°C, apply V_R for 30 min according JIS-C-5101-4		
Resistance to Soldering Heat	The capacitors shall be kept on a hot plate maintained at 250°C for 30 seconds. After removing from the hot plate and restored at room temperature, they meet the characteristic requirements listed below		
	△C/C_R	Within ±10% of initial value	
	tanδ	Less than specified value	
	I_{Leak}	Less than specified value	

For further information please contact sales@capxon.org

STANDARD RATINGS

Part number shows blister tape on paper reel

V_R (V)	Standard	Vibration-proof	C_R (µF)	ø D (mm)	L (mm)	I_R ▪ Max. Ripple Current +125°C ▪ 120Hz (mA rms)	CapXon Part Number
10	●	●	100	6.3	7.7	53	TV101M010E077ETR □□
	●	*	100	8	6.5	58	TV101M010F065ETR □□
	●	●	220	8	10.5	90	TV221M010F105ETR □□
	●	●	330	10	10.5	112	TV331M010G105ETR □□
16	●	●	100	8	10.5	66	TV101M016F105ETR □□
	●	●	220	10	10.5	102	TV221M016G105ETR □□
25	●	●	47	6.3	7.7	45	TV470M025E077ETR □□
	●	*	47	8	6.5	48	TV470M025F065ETR □□
	●	●	100	8	10.5	74	TV101M025F105ETR □□
	●	●	220	10	10.5	116	TV221M025G105ETR □□
35	●	●	33	6.3	7.7	40	TV330M035E077ETR □□
	●	*	33	8	6.5	44	TV330M035F065ETR □□
	●	●	47	8	10.5	52	TV470M035F105ETR □□
	●	●	100	10	10.5	80	TV101M035G105ETR □□
50	●	●	10	6.3	7.7	22	TV100M050E077ETR □□
	●	*	10	8	6.5	24	TV100M050F065ETR □□
	●	●	22	6.3	7.7	35	TV220M050E077ETR □□
	●	*	22	8	6.5	38	TV220M050F065ETR □□
	●	●	33	8	10.5	46	TV330M050F105ETR □□
	●	●	47	10	10.5	58	TV470M050G105ETR □□
160	●	●	6.8	8	10.5	42	TV6R8M160F105ETR □□
	●	●	10	10	10.5	59	TV100M160G105ETR □□
	●	●	18	10	10.5	65	TV180M160G105ETR □□
200	●	●	4.7	8	10.5	36	TV4R7M200F105ETR □□
	●	●	6.8	10	10.5	59	TV6R8M200G105ETR □□
	●	●	10	10	10.5	59	TV100M200G105ETR □□
250	●	●	3.3	8	10.5	28	TV3R3M250F105ETR □□
	●	●	4.7	10	10.5	59	TV4R7M250G105ETR □□
400	●	●	1	8	10.5	27	TV010M400F105ETR □□
	●	●	1.8	8	10.5	30	TV1R8M400F105ETR □□
	●	●	2.2	8	10.5	33	TV2R2M400F105ETR □□
	●	●	2.2	10	10.5	37	TV2R2M400G105ETR □□
	●	●	3.3	8	10.5	36	TV3R3M400F105ETR □□
	●	●	3.3	10	10.5	39	TV3R3M400G105ETR □□
	●	●	4.7	10	10.5	46	TV4R7M400G105ETR □□
	●	●	5.6	10	10.5	50	TV5R6M400G105ETR □□
450	●	●	2.2	8	10.5	28	TV2R2M450F105ETR □□
	●	●	3.3	10	10.5	32	TV3R3M450G105ETR □□
	●	●	3.9	10	10.5	38	TV3R9M450G105ETR □□

***Consult CapXon for availability**

□□□: Enter **blank** for Standard package
□□□: Enter **W** for Vibration proof version
□□□: Enter **X** for AEC-Q200
□□□: Enter **XW** for AEC-Q200 and Vibration proof version

For further information please contact sales@capxon.org

DIMENSIONS STANDARD PACKAGE ▪ All dimensions in mm

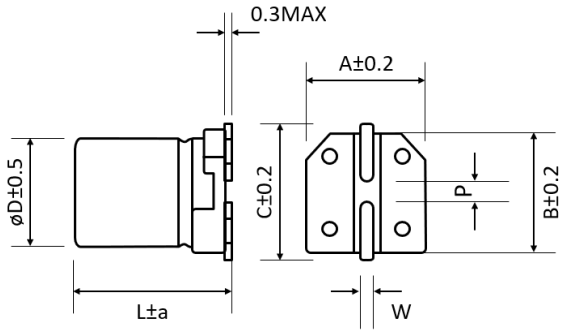

ø D	L	a	A	B	C	W	P±0.2
6.3	7.7	Max	6.6	6.6	7.2	0.5 to 0.8	2.2
8	6.5	Max	8.3	8.3	9	0.5 to 0.8	2.3
8	10.5	Max	8.3	8.3	9	0.7 to 1.1	3.1
10	10.5	Max	10.3	10.3	11	0.7 to 1.1	4.5

DIMENSIONS VP PACKAGE (VIBRATION-PROOF) ▪ All dimensions in mm

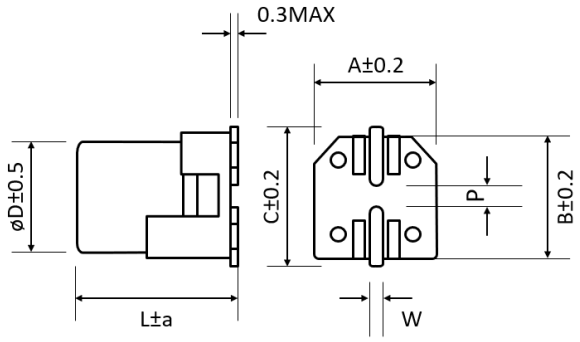

ø D	L	a	A	B	C	W	P±0.2
6.3	7.7	0.5	6.6	6.6	7.2	0.5 to 0.8	2.2
8	6.5	0.5	8.3	8.3	9	0.7 to 1.1	3.1
8	10.5	0.5	8.3	8.3	9	0.7 to 1.1	3.1
10	10.5	0.5	10.5	10.5	11.2	0.7 to 1.1	4.5

MULTIPLIER K_f for RIPPLE CURRENT vs. FREQUENCY

C_R (µF) / Frequency (Hz)	50/60	100/120	500	1k	10k ~ 100k
$1 \le C_R \le 47$	0.8	1	1.2	1.3	1.5
$100 < C_R \le 330$	0.8	1	1.1	1.15	1.2

PRECAUTIONS, GUIDELINES AND PACKAGING INFORMATON

Unless otherwise agreed in individual specifications, all products are subject to our “General Precautions and Guidelines” as well as our “Packaging Information”. Please refer to the following links in the table.

General Precautions and Guidelines	Packaging Information Liquid SMD
Page 837	Page 88

For further information please contact sales@capxon.org

DISCLAIMER

All product related data (e.g. specification, statements and general information) are subject to change without any notice. It is necessary that the customer observes all product related technical / application information and handling instructions.

CapXon products are designed and manufactured according to severe quality and safety standards. Under no circumstance, CapXon warrants that any CapXon product is suitable for the purposes intended for your application, even CapXon knows the application. It is customer's duty and obligation to check and make sure that CapXon products are suitable for the purposes intended and select the correct and proper CapXon product. Customers are requested to perform a sufficient validation and reliability evaluation to assure needed safety level and reliability performance by suitable designs and to apply proper safeguards (e.g. redundancies, protective circuits).

Particular operating conditions (ambient temperature, ripple current, voltage, thermal resistance, etc.) as well as storage, production or assembly may affect the performance and the lifetime of the capacitor. Please consult CapXon for lifetime estimation, failure mode considerations or worst-case scenarios according to the product technology, product tolerances / deviations or change of the characteristics of the capacitor due to shipment, storage, handling, production and usage.

For aerospace or military application, life-saving, life-sustaining, safety critical applications or any application where failure may cause severe personal injury or death, please consult us before design-in the capacitor in your application.

Except for the written expressed warranties, CapXon does not impliedly, by assumption or whatever else, warrant, undertake, promise any other warranty or guaranty for any CapXon product.

For further information, please visit our website www.capxongroup.com or contact CapXon directly.

PRODUCT CODE ▪ SMD ALUMINUM ELECTROLYTIC CAPACITORS

SMD type example:
DV series ▪ 220µF ▪ 50V ▪ ±20% ▪ Ø 10mm ▪ L 10.5mm ▪ Tape & Reel ▪ AEC-Q200

1	2	3	4	5	6	7	8	9	10	11	12	13	14	15	16	17	18	19	20
D	V	2	2	1	M	0	5	0	G	1	0	5	E	T	R	X	-	-	-
Series		Capacitance			Capacitance tolerance	Voltage			Case Ø (mm)	Height (mm)			Type code	Taping		Special requirement			

Code	µF
0R1	0.1
R47	0.47
010	1
4R7	4.7
100	10
101	100
102	1000
682	6800

Code	%
H	±5
K	±10
S	±15
M	±20
N	±30
D	±40
I	+5 to +20
B	0 to -20
G	0 to +10
Z	0 to +20
Y	0 to +30
X	0 to +40
A	0 to +50
J	-5 to +20
C	-5 to +30
E	-8 to +5
V	-10 to +20
Q	-10 to +30
T	-10 to +50
W	-20 to +10
P	-15 to +20
L	-25 to +20
U	-30 to 0
F	-35 to 0
O	-50 to 0

Code	Volt
004	4
6R3	6.3
010	10
016	16
025	25
035	35
050	50
063	63
080	80
100	100
160	160
200	200
250	250
400	400
450	450

Code	ØD
B	4
C	5
E	6.3
F	8
G	10
H	12
Z	12.5
I	13
J	16
K	18
L	20
M	22

Code	H
055	5.5
061	6.1
065	6.5
077	7.7
105	10.5
140	14
170	17
215	21.5

Code	Type
E	Standard

Code	Tape on reel
TR	

Code	Special
U	Plastic reel
W	Vibration proof
X	AEC-Q200

See datasheet for reference

Please consult CapXon for further assistance

MARKING ▪ SMD ALUMINUM ELECTROLYTIC CAPACITORS

Aluminum Electrolytic Capacitor ▪ SMD type

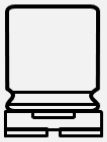

220: Nominal capacitance (µF)
50V: Rated voltage (V) ▪ Standard type
50X: Rated voltage (V) ▪ AEC-Q200 type
▬ (-) polarity (Cathode indicate)
D: DV Series
96: Production datacode year/month (ex. 2019/June)

Top view Standard type

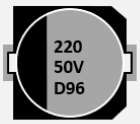

Top view AEC-Q200 type

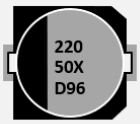

Digits	Description
1st	Last digit of the year
2nd	Month 1, 2, 3...9, A (10), B (11), C (12)

TAPING ▪ SMD ALUMINUM ELECTROLYTIC CAPACITORS ▪ REEL PACK

SMD taping ▪ ØD 4mm to 10mm

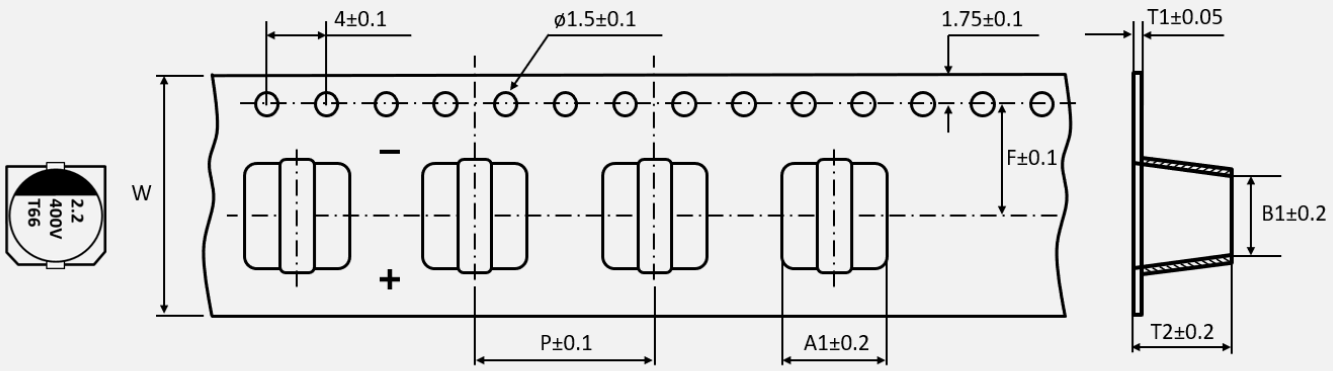

SMD taping ▪ ØD ≥ 12.5mm

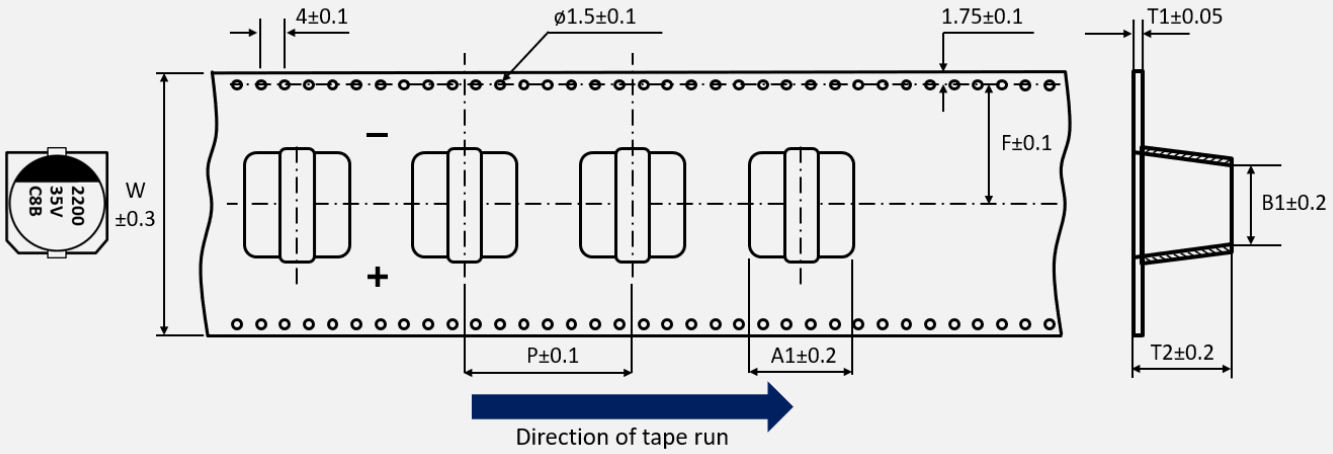

All dimensions in mm

Ø D x L	4 x 5.5	5 x 5.5	6.3 x 5.5	6.3 x 6.1	6.3 x 7.7	8 x 6.5	8 x 10.5	10 x 10.5	12.5 x 14	16 x 17	16 x 21.5	18 x 16.5	18 x 21.5
W	12	12	16	16	16	16	24	24	32	44	44	44	44
P	8	12	12	12	12	12	16	16	24	28	32	32	32
F	5.5	5.5	7.5	7.5	7.5	7.5	11.5	11.5	16	22	22	22	22
A1	4.7	5.7	7	7	7	8.7	8.7	10.7	13.9	17.5	17.5	19.9	19.9
B1	4.7	5.7	7	7	7	8.7	8.7	10.7	13.9	17.5	17.5	19.9	19.9
T1	0.4	0.4	0.4	0.4	0.4	0.4	0.4	0.4	0.5	0.5	0.5	0.5	0.5
T2	5.7	5.7	5.7	6.2	8	7	11	11	14.5	17.3	23	17.5	23

For further information please contact sales@capxon.org

TAPING ▪ SMD ALUMINUM ELECTROLYTIC CAPACITORS ▪ REEL PACK

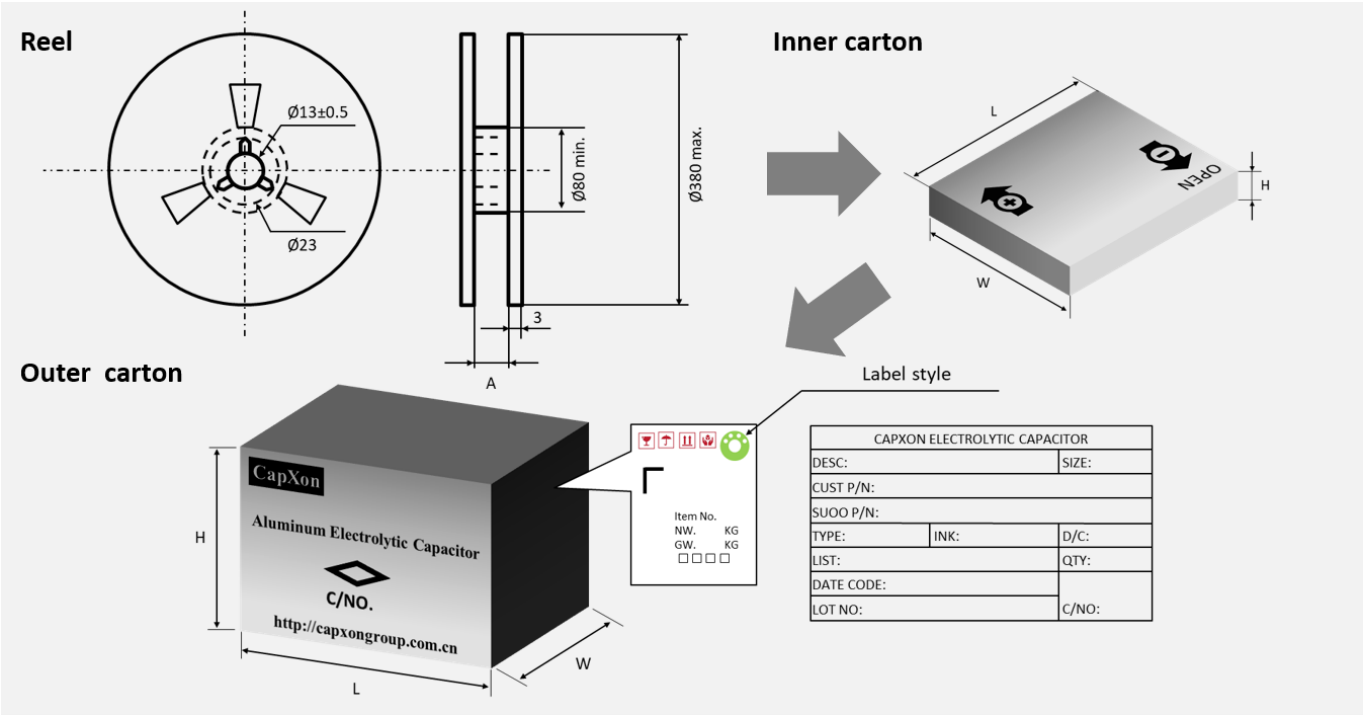

Ø D (mm)	L (mm)	A (mm)	Reel quantity (pcs)	Inner box quantity (pcs)	Inner box size L x W x H (mm)	Outer box quantity (pcs)	Outer box size L x W x H (mm)	Country of origin	Tariff number
4	5.5	14	2000	10000	400 x 390 x 106	30000	425 x 412 x 340	China	85322200
5	5.5	14	1000	5000	400 x 390 x 106	15000	425 x 412 x 340	China	85322200
6.3	5.5	18	1000	4000	400 x 390 x 106	12000	425 x 412 x 340	China	85322200
	6.1	18	1000	4000	400 x 390 x 106	12000	425 x 412 x 340	China	85322200
	7.7	18	900	3600	400 x 390 x 106	10800	425 x 412 x 340	China	85322200
8	6.5	18	1000	4000	400 x 390 x 106	12000	425 x 412 x 340	China	85322200
	10.5	26	500	1500	400 x 390 x 106	4500	425 x 412 x 340	China	85322200
10	10.5	26	500	1500	400 x 390 x 106	4500	425 x 412 x 340	China	85322200
12.5	14	34	200	600	400 x 390 x 130	1800	425 x 412 x 340	China	85322200
16	17	46	125	250	400 x 390 x 106	750	425 x 412 x 340	China	85322200
	21.5	46	100	200	400 x 390 x 106	600	425 x 412 x 340	China	85322200
18	16.5	46	125	250	400 x 390 x 106	750	425 x 412 x 340	China	85322200
	21.5	46	100	200	400 x 390 x 106	600	425 x 412 x 340	China	85322200

Remark: Standard = Paper reel
Plastic reel = Add code "U" at the end of the part number

For further information please contact sales@capxon.org

DIMENSIONS AND PAD LAYOUT STANDARD PACKAGE ▪ All dimensions in mm

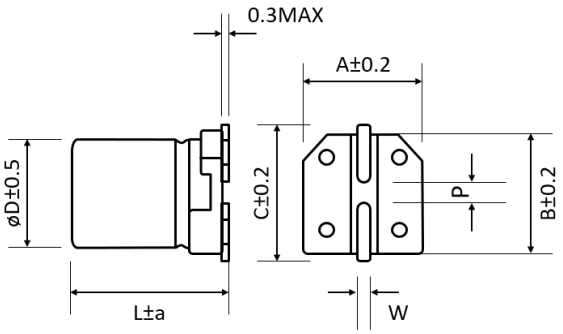

ø D	L	a	A	B	C	W	P±0.2
4	5.5	Max	4.3	4.3	4.9	0.5 to 0.8	1
5	5.5	Max	5.3	5.3	5.9	0.5 to 0.8	1.4
6.3	5.5	0.2	6.6	6.6	7.2	0.5 to 0.8	2.2
6.3	6.1	Max	6.6	6.6	7.2	0.5 to 0.8	2.2
6.3	7.7	Max	6.6	6.6	7.2	0.5 to 0.8	2.2
8	6.5	Max	8.3	8.3	9	0.5 to 0.8	2.3
8	10.5	Max	8.3	8.3	9	0.7 to 1.1	3.1
10	10.5	Max	10.3	10.3	11	0.7 to 1.1	4.5
12.5	14	Max	13	13	13.9	1 to 1.4	4.5
16	17	0.5	17	17	18	1 to 1.4	6.6
16	21.5	0.5	17	17	18	1 to 1.4	6.6
18	16.5	0.5	19	19	20	1 to 1.4	6.6
18	21.5	0.5	19	19	20	1 to 1.4	6.6

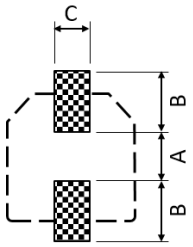

ø D	L	A	B	C
4	5.5	1	2.6	1.6
5	5.5	1.4	3	1.6
6.3	5.5	2.1	3.5	1.6
6.3	6.1	2.1	3.5	1.6
6.3	7.7	2.1	3.5	1.6
8	6.5	2.1	4.5	1.6
8	10.5	2.8	4.2	1.9
10	10.5	4.3	4.4	1.9
12.5	14	4.3	5.8	2.5
16	17	6	6.5	3.5
16	21.5	6	6.5	3.5
18	16.5	6	7.5	3.5
18	21.5	6	7.5	3.5

For further information please contact sales@capxon.org

DIMENSIONS AND PAD LAYOUT VIBRATION-PROOF PACKAGE ▪ All dimensions in mm

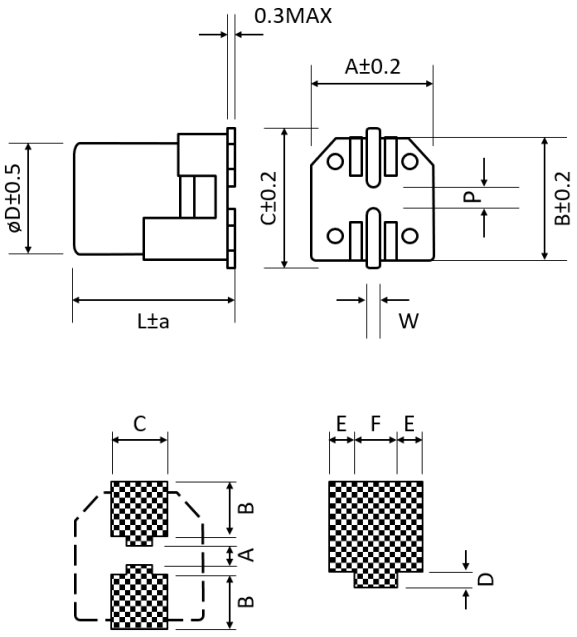

ø D	L	a	A	B	C	W	P±0.2
6.3	6.1	0.5	6.6	6.6	7.2	0.5 to 0.8	2.2
6.3	7.7	0.5	6.6	6.6	7.2	0.5 to 0.8	2.2
8	6.5	0.5	8.3	8.3	9.0	0.7 to 1.1	3.1
8	10.5	0.5	8.3	8.3	9.0	0.7 to 1.1	3.1
10	10.5	0.5	10.5	10.5	11.2	0.7 to 1.1	4.5
12.5	14	0.5	13	13	13.9	1 to 1.4	5.5
16	17	0.5	17	17	18	1 to 1.4	7.5
16	21.5	0.5	17	17	18	1 to 1.4	7.5
18	16.5	0.5	19	19	20	1 to 1.4	7.5
18	21.5	0.5	19	19	20	1 to 1.4	7.5

ø D	L	A	B	C	D	E	F
6.3	6.1	1.8	3.7	4.5	0.8	0.8	1.7
6.3	7.7	1.8	3.7	4.5	0.8	0.8	1.7
8	6.5	2.5	4.5	5	0.8	1.1	2.3
8	10.5	2.5	4.5	5	0.8	1.1	2.3
10	10.5	3	5	5.5	0.8	1.3	2.4
12.5	14	3.5	5.5	8	1	2.6	2.8
16	17	5	7.6	11	1.2	4.1	2.8
16	21.5	5	7.6	11	1.2	4.1	2.8
18	16.5	5	7.6	11	2.2	4.1	2.8
18	21.5	5	7.6	11	2.2	4.1	2.8

For further information please contact sales@capxon.org

VIBRATION SPECIFICATION ▪ STANDARD AND VIBRATION PROOF PACKAGE

Package	Test Standard	Condition	Determinant Standard
Standard package	IEC 60384-1 IEC 60384-18 IEC 60068-2-6 MIL-STD 202 Method 204	1. 10Hz ~ 2kHz ~ 10Hz (20 minutes) 2. Amplitude (single peak): 0.35 mm (at 10 ~ 55Hz) 3. Acceleration: 49m/s^2 (5g at 55 ~ 2kHz) 4. X, Y, Z directions, 4 hours per direction, total 12 hours	1. ΔC/C ≤ ±5% of initial value 2. DF ≤ stated limit 3. LC ≤ stated limit 4. No visible damage 5. No leakage of electrolyte
Vibration-proof package		1. Consult CapXon for test details	1. Consult CapXon for test details

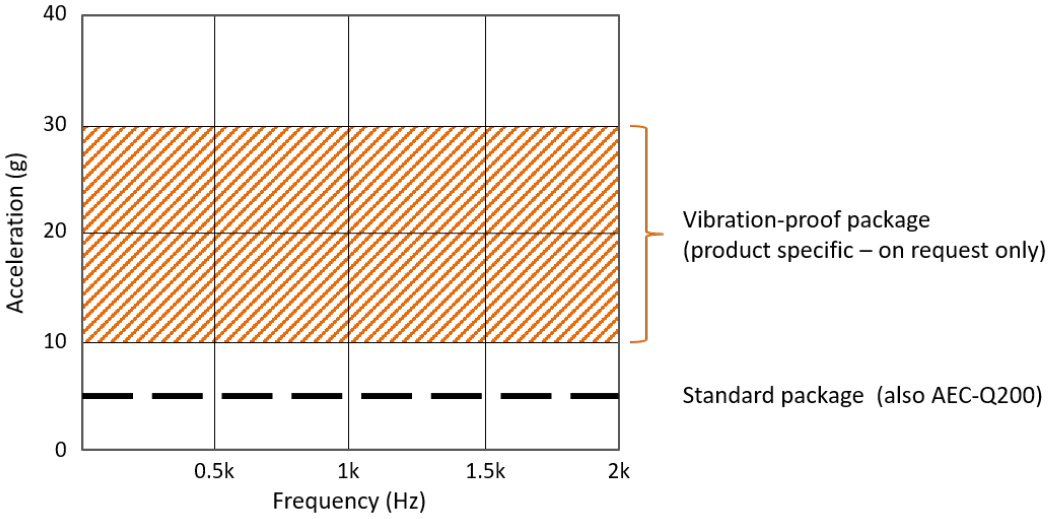

For further information please contact sales@capxon.org

Aluminum Electrolytic Capacitors

Radial Types



OVERVIEW ▪ RADIAL ALUMINUM ELECTROLYTIC CAPACITORS

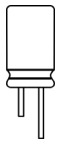

Features



Series	Page	AEC-Q200	Bi-Polar	High Temperature	Low ESR	Low Height	Low Leakage	Overvoltage Vent	Photo Flash	Slim Type	Standard	Ultra Long Life	Ultra Low ESR	Ultra Miniaturized	Temperature Range (°C)		Voltage Range (V)		Capacitance Range (µF)		Endurance (hours)
RF	97								●						-20	+55	330	350	100	450	5000 times
SS	99					●								●	-40	+85	4	50	0.1	330	1000
SM	103					●								●	-40	+85	4	63	0.1	470	1000
SR	108					●									-40	+85	6.3	50	0.1	220	1000
SW	111					●									-40	+85	4	50	0.1	470	1000
SH	114					●								●	-40	+85	4	63	0.1	470	2000
RW	119										●				-40	+85	6.3	160	0.1	33000	2000
NR	124		●												-40	+85	6.3	100	0.15	1000	2000
GS	128										●				-40	+85	6.3	100	0.1	33000	2000
															-25		160	450	0.47	560	
NP	140		●												-40	+85	6.3	100	0.47	3300	2000
															-25		160	250	0.47	47	
ST	145					●								●	-40	+105	4	50	0.1	220	1000
SK	149					●								●	-40	+105	4	63	0.1	470	1000
SZ	154				●									●	-55	+105	6.3	35	6.8	330	1000
KZ	158				●										-40	+105	6.3	50	0.47	6800	1000 to 2000
KS	165							●							-25	+105	200	400	4.7	400	2000
KY	169									●					-25	+105	250	450	12	150	2000
KM	173										●				-40	+105	6.3	100	0.1	22000	2000
															-25		160	500	0.47	560	
NK	189		●												-40	+105	6.3	100	0.47	3300	2000
															-25		160	250	0.47	47	
SJ	194					●								●	-40	+105	6.3	63	0.1	220	2000
LL	198						●								-40	+105	6.3	63	0.1	2200	2000
LZ	202												●		-40	+105	6.3	25	220	3300	2000
SY	206				●	●									-55	+105	6.3	50	1	330	2000

For further information please contact sales@capxon.org

OVERVIEW ▪ RADIAL ALUMINUM ELECTROLYTIC CAPACITORS

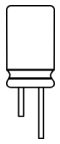

Features



Series	Page	AEC-Q200	Bi-Polar	High Temperature	Low ESR	Low Height	Low Leakage	Overvoltage Vent	Photo Flash	Slim Type	Standard	Ultra Long Life	Ultra Low ESR	Ultra Miniaturized	Temperature Range (°C)		Voltage Range (V)		Capacitance Range (µF)		Endurance (hours)
KF	210				●										-40	+105	6.3	100	0.47	15000	2000 to 5000
															-25		160	450	0.47	330	
GF	223				●										-40	+105	6.3	100	4.7	6800	2000 to 5000
KC	231									●				●	-25	+105	400	450	82	220	3000
SG	234	●				●								●	-40	+105	6.3	50	0.1	470	4000
FH	238												●		-40	+105	6.3	100	6.8	18000	4000 to 10000
LY	247									●					-25	+105	250	450	12	150	5000
KL	251	●										●			-40	+105	160	400	3.3	330	5000
															-25		450	500	2.2	180	
GH	258	●			●										-55	+105	6.3	100	0.47	12000	5000 to 10000
KH	274											●			-40	+105	10	400	6.8	3300	5000 to 10000
															-25		450		6.8	100	
FK	281	●										●			-40	+105	160	450	1	330	6000 to 8000
															-25		500		4.7	120	
ZH	289												●		-40	+105	6.3	100	8.2	8200	6000 to 10000
FL	296	●										●			-40	+105	160	450	1	680	8000 to 12000
															-25		500		10	68	
HY	306									●					-25	+105	250	450	12	120	10000
GT	310	●										●			-40	+105	10	100	1	330	10000
LE	313											●			-40	+105	160	450	1	68	12000 to 20000
TH	317	●		●											-40	+125	10	400	0.47	8200	1000 to 3000
															-25		450		1	47	
TE	328	●		●											-40	+130	10	400	2.2	4700	1000 to 3000

For further information please contact sales@capxon.org

RF SERIES ▪ PULSE & PHOTO-FLASH TYPE



KEY FEATURES

PHOTO FLASH

- **ALUMINUM ELECTROLYTIC CAPACITOR** ▪ THT type
- Small dimensions and low leakage current
- Optimized material combination to achieve low ESR and low dissipation factor
- Especially for impulse applications as photo flash generators, intense pulse light hair removers, laser power supplies and warning beacons

HF Halogen Free

RoHS & REACH COMPLIANT

SPECIFICATIONS

Items		Performance Characteristics
Operating Temperature Range		-20 ~ +55°C
Rated Voltage Range	V_R	330 ~ 350V DC
Capacitance Range	C_R	100 ~ 450µF
Cap. Tolerance	ΔC	-10 ~ +20% (120Hz ▪ 25°C)
Leakage Current (20°C ▪ V_R applied)	I_{LEAK}	≤ 1·C_R (µA) ▪ After 5 minutes [I_{LEAK} (µA) ; C_R (µF)]
Dissipation Factor % (20°C ▪ 120Hz)	tanδ	8% max.

Lifetime Test			
Charge and Discharge 5 ~ 35°C (V_R applied)	Test	**5 000 times**	Duration time
	Cycles	30 sec	Charge and discharge cycles
	R_D	0.7 ~ 1Ω	Discharge resistance
	△C/C_R	≤ ±10% of initial measured value	
	tanδ	≤ 150% of initial specified value	
	I_{Leak}	≤ the initial specified value	
Shelf Life 55°C (V_R = 0)	Test	**1 000 hours**	
	△C/C_R	≤ ±10% of initial measured value	
	tanδ	≤ 150% of initial specified value	
	I_{Leak}	≤ the initial specified value	
	Before measurement: Restore capacitor to 20°C, apply V_R for 30 min according JIS-C-5101-4		

Pulse and flash-light capacitors are specially adapted to the application.

PHOTO FLASH HAIR REMOVER LASER BEACONS

The data listed in the upper table and the following page are therefore **only a guide** for possible designs of the capacitance, voltage, dimensions, pulse frequency.

Please contact our CapXon product specialists for further details.

For further information please contact sales@capxon.org

DIMENSIONS ▪ All dimensions in mm

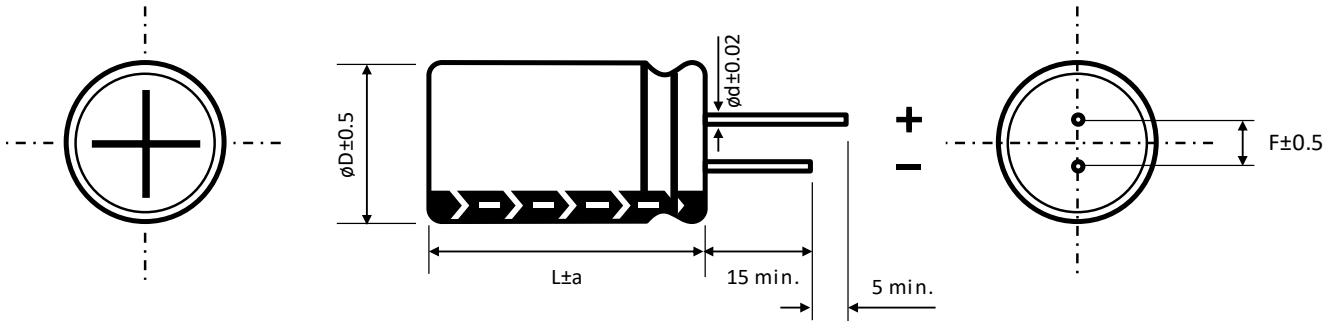

ø D	8	10	12	13	14	16	18	20
F	3.5	5	5	5	5	7.5	7.5	7.5
ø d	0.6	0.6	0.8	0.8	0.8	0.8	0.8	0.8
a	1.5							

PRECAUTIONS, GUIDELINES AND PACKAGING INFORMATON

Unless otherwise agreed in individual specifications, all products are subject to our “General Precautions and Guidelines” as well as our “Packaging Information”. Please refer to the following links in the table.

General Precautions and Guidelines	Packaging Information Liquid Radial
Page 837	Page 336

DISCLAIMER

All product related data (e.g. specification, statements and general information) are subject to change without any notice. It is necessary that the customer observes all product related technical / application information and handling instructions.

CapXon products are designed and manufactured according to severe quality and safety standards. Under no circumstance, CapXon warrants that any CapXon product is suitable for the purposes intended for your application, even CapXon knows the application. It is customer's duty and obligation to check and make sure that CapXon products are suitable for the purposes intended and select the correct and proper CapXon product. Customers are requested to perform a sufficient validation and reliability evaluation to assure needed safety level and reliability performance by suitable designs and to apply proper safeguards (e.g. redundancies, protective circuits).

Particular operating conditions (ambient temperature, ripple current, voltage, thermal resistance, etc.) as well as storage, production or assembly may affect the performance and the lifetime of the capacitor. Please consult CapXon for lifetime estimation, failure mode considerations or worst-case scenarios according to the product technology, product tolerances / deviations or change of the characteristics of the capacitor due to shipment, storage, handling, production and usage.

For aerospace or military application, life-saving, life-sustaining, safety critical applications or any application where failure may cause severe personal injury or death, please consult us before design-in the capacitor in your application.

Except for the written expressed warranties, CapXon does not impliedly, by assumption or whatever else, warrant, undertake, promise any other warranty or guaranty for any CapXon product.

For further information, please visit our website www.capxongroup.com or contact CapXon directly.

SS SERIES ▪ 5MM HEIGHT, STANDARD 85°C TYPE



KEY FEATURES

LOW HEIGHT

- **ALUMINUM ELECTROLYTIC CAPACITOR** ▪ THT type
- Endurance: 85°C ▪ 1000 hours
- Optimized for high density insertion
- Low height ▪ 5mm
- Miniaturized for space critical applications

SPECIFICATIONS

Items		Performance Characteristics							
Operating Temperature Range		-40 ~ +85°C							
Rated Voltage Range	V_R	4 ~ 50V DC							
Surge Voltage	V_S	$V_S = 1.15 \cdot V_R$							
Capacitance Range	C_R	0.1 ~ 330µF							
Cap. Tolerance	ΔC	±20% (120Hz ▪ 20°C)							
Leakage Current (20°C ▪ V_R applied)	I_{LEAK}	≤ $0.01 \cdot C_R \cdot V_R$ or 3µA, whichever is greater ▪ After 1 minute [I_{LEAK} (µA) ; C_R (µF) ; V_R (V)]							
Dissipation Factor % (20°C ▪ 120Hz)	tanδ	V_R (V DC)	4	6.3	10	16	25	35	50
		tanδ (%)	35	24	20	16	14	12	10
Low Temperature Characteristics at 120Hz	Z ratio max.	V_R (V DC)	4	6.3	10	16	25	35	50
		Z-25°C/Z+20°C	7	4	3	2	2	2	2
		Z-40°C/Z+20°C	15	8	8	4	4	3	3

Lifetime Test			
Endurance 85°C (V_R applied)	Test	**1000 hours**	
	△C/C_R	≤ ±20% of initial measured value	6.3 ~ 50 V
		≤ ±30% of initial measured value	4V
	tanδ	≤ 200% of initial specified value	
	I_{Leak}	≤ the initial specified value	
Shelf Life 85°C (V_R = 0)	Test	**1000 hours**	
	△C/C_R	≤ ±20% of initial measured value	6.3 ~ 50 V
		≤ ±30% of initial measured value	4V
	tanδ	≤ 200% of initial specified value	
	I_{Leak}	≤ the initial specified value	
	Before measurement: Restore capacitor to 20°C, apply V_R for 30 min according JIS-C-5101-4		

MULTIPLIER K_f for RIPPLE CURRENT vs. FREQUENCY

C_R (µF) / Frequency (Hz)	50/60	100/120	1k	≥ 10k
0.1 ~ 68	0.8	1	1.3	1.5
100 ~ 330	0.8	1	1.15	1.2

For further information please contact sales@capxon.org

STANDARD RATINGS

Part number shows bulk version with straight leads

V_R (V)	C_R (µF)	ø D (mm)	L (mm)	I_R ▪ Max. Ripple Current +85°C ▪ 120Hz (mA rms)	CapXon Part Number
4	10	4	5	11	SS100M004B050A
	15	4	5	17	SS150M004B050A
	22	4	5	21	SS220M004B050A
	33	4	5	28	SS330M004B050A
	47	4	5	33	SS470M004B050A
	68	5	5	43	SS680M004C050A
	68	6.3	5	48	SS680M004E050A
	100	5	5	52	SS101M004C050A
	220	6.3	5	78	SS221M004E050A
	330	8	5	142	SS331M004F050A
6.3	10	4	5	14	SS100M6R3B050A
	15	4	5	17	SS150M6R3B050A
	22	4	5	24	SS220M6R3B050A
	33	4	5	33	SS330M6R3B050A
	33	5	5	37	SS330M6R3C050A
	47	5	5	39	SS470M6R3C050A
	68	6.3	5	53	SS680M6R3E050A
	100	6.3	5	65	SS101M6R3E050A
	220	6.3	5	90	SS221M6R3E050A
	220	8	5	115	SS221M6R3F050A
	330	8	5	145	SS331M6R3F050A
10	6.8	4	5	11	SS6R8M010B050A
	10	4	5	17	SS100M010B050A
	15	4	5	21	SS150M010B050A
	22	4	5	30	SS220M010B050A
	22	5	5	33	SS220M010C050A
	33	5	5	39	SS330M010C050A
	47	5	5	42	SS470M010C050A
	47	6.3	5	46	SS470M010E050A
	68	6.3	5	56	SS680M010E050A
	100	6.3	5	76	SS101M010E050A
	220	8	5	138	SS221M010F050A
16	4.7	4	5	11	SS4R7M016B050A
	6.8	4	5	13	SS6R8M016B050A
	10	4	5	20	SS100M016B050A
	15	5	5	26	SS150M016C050A
	22	4	5	33	SS220M016B050A
	22	5	5	35	SS220M016C050A
	33	5	5	42	SS330M016C050A
	33	6.3	5	46	SS330M016E050A
	47	6.3	5	58	SS470M016E050A
	68	6.3	5	65	SS680M016E050A
	100	6.3	5	86	SS101M016E050A
	100	8	5	92	SS101M016F050A

See "PACKAGING INFORMATION" to taped or formed products.

STANDARD RATINGS

Part number shows bulk version with straight leads

V_R (V)	C_R (µF)	ø D (mm)	L (mm)	I_R ▪ Max. Ripple Current +85°C ▪ 120Hz (mA rms)	CapXon Part Number
25	3.3	4	5	10	SS3R3M025B050A
	4.7	4	5	15	SS4R7M025B050A
	6.8	4	5	17	SS6R8M025B050A
	10	4	5	27	SS100M025B050A
	10	5	5	28	SS100M025C050A
	15	5	5	30	SS150M025C050A
	15	6.3	5	33	SS150M025E050A
	22	6.3	5	44	SS220M025E050A
	33	6.3	5	52	SS330M025E050A
	47	6.3	5	62	SS470M025E050A
	68	8	5	90	SS680M025F050A
	100	8	5	108	SS101M025F050A
35	2.2	4	5	8.4	SS2R2M035B050A
	3.3	4	5	11	SS3R3M035B050A
	4.7	4	5	18	SS4R7M035B050A
	6.8	5	5	20	SS6R8M035C050A
	10	5	5	29	SS100M035C050A
	15	6.3	5	33	SS150M035E050A
	22	6.3	5	46	SS220M035E050A
	33	8	5	63	SS330M035F050A
	47	8	5	83	SS470M035F050A
50	0.1	4	5	1.5	SS0R1M050B050A
	0.15	4	5	2	SSR15M050B050A
	0.22	4	5	2.6	SSR22M050B050A
	0.33	4	5	3.2	SSR33M050B050A
	0.47	4	5	3.8	SSR47M050B050A
	0.68	4	5	5	SSR68M050B050A
	1	4	5	6.2	SS010M050B050A
	1.5	4	5	7	SS1R5M050B050A
	2.2	4	5	9	SS2R2M050B050A
	3.3	4	5	14	SS3R3M050B050A
	4.7	5	5	20	SS4R7M050C050A
	6.8	6.3	5	25	SS6R8M050E050A
	10	6.3	5	30	SS100M050E050A
	15	6.3	5	37	SS150M050E050A
	22	6.3	5	48	SS220M050E050A
	22	8	5	52	SS220M050F050A
	33	8	5	70	SS330M050F050A

See "PACKAGING INFORMATION" to taped or formed products.

DIMENSIONS ▪ All dimensions in mm

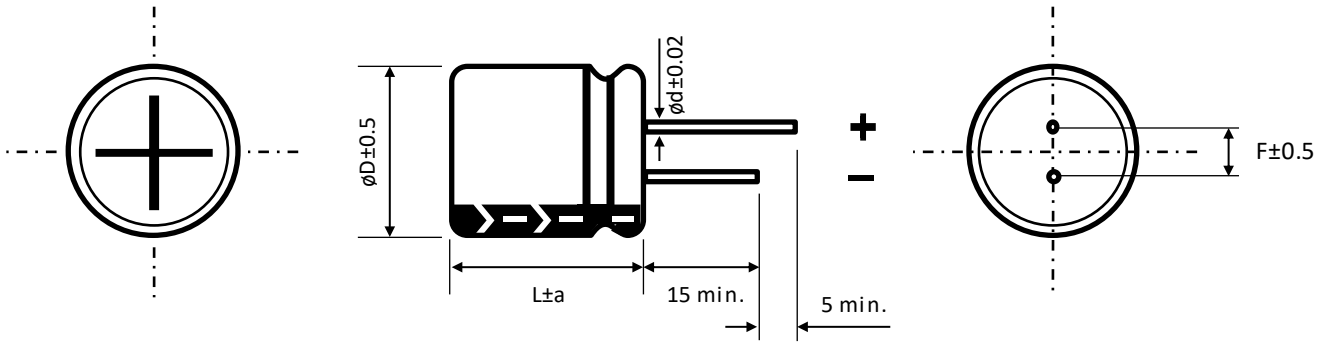

ø D	4	5	6.3	8
F	1.5	2	2.5	3.5
ø d	0.45	0.45	0.45	0.45
a	1	1	1	1

PRECAUTIONS, GUIDELINES AND PACKAGING INFORMATON

Unless otherwise agreed in individual specifications, all products are subject to our “General Precautions and Guidelines” as well as our “Packaging Information”. Please refer to the following links in the table.

General Precautions and Guidelines	Packaging Information Liquid Radial
Page 837	Page 336

DISCLAIMER

All product related data (e.g. specification, statements and general information) are subject to change without any notice. It is necessary that the customer observes all product related technical / application information and handling instructions.

CapXon products are designed and manufactured according to severe quality and safety standards. Under no circumstance, CapXon warrants that any CapXon product is suitable for the purposes intended for your application, even CapXon knows the application. It is customer's duty and obligation to check and make sure that CapXon products are suitable for the purposes intended and select the correct and proper CapXon product. Customers are requested to perform a sufficient validation and reliability evaluation to assure needed safety level and reliability performance by suitable designs and to apply proper safeguards (e.g. redundancies, protective circuits).

Particular operating conditions (ambient temperature, ripple current, voltage, thermal resistance, etc.) as well as storage, production or assembly may affect the performance and the lifetime of the capacitor. Please consult CapXon for lifetime estimation, failure mode considerations or worst-case scenarios according to the product technology, product tolerances / deviations or change of the characteristics of the capacitor due to shipment, storage, handling, production and usage.

For aerospace or military application, life-saving, life-sustaining, safety critical applications or any application where failure may cause severe personal injury or death, please consult us before design-in the capacitor in your application.

Except for the written expressed warranties, CapXon does not impliedly, by assumption or whatever else, warrant, undertake, promise any other warranty or guaranty for any CapXon product.

For further information, please visit our website www.capxongroup.com or contact CapXon directly.

SM SERIES ▪ 7MM HEIGHT, STANDARD 85°C TYPE



KEY FEATURES

LOW HEIGHT

- **ALUMINUM ELECTROLYTIC CAPACITOR** ▪ THT type
- Endurance: 85°C ▪ 1000 hours
- Optimized for high density insertion
- Low height ▪ 7mm
- Miniaturized for space critical applications

SPECIFICATIONS

Items		Performance Characteristics							
Operating Temperature Range		-40 ~ +85°C							
Rated Voltage Range	V_R	4 ~ 63V DC							
Surge Voltage	V_S	$V_S = 1.15 \cdot V_R$							
Capacitance Range	C_R	0.1 ~ 470µF							
Cap. Tolerance	ΔC	±20% (120Hz ▪ 20°C)							
Leakage Current (20°C ▪ V_R applied)	I_{LEAK}	≤ $0.01 \cdot C_R \cdot V_R$ or 3µA, whichever is greater ▪ After 1 minute [I_{LEAK} (µA) ; C_R (µF) ; V_R (V)]							
Dissipation Factor % (20°C ▪ 120Hz)	tanδ	V_R (V DC)	4	6.3	10	16	25	35	50	63
		tanδ (%)	25	22	20	16	14	12	10	9
Low Temperature Characteristics at 120Hz	Z ratio max.	V_R (V DC)	4	6.3	10	16	25	35	50	63
		Z-25°C/Z+20°C	7	4	3	2	2	2	2	2
		Z-40°C/Z+20°C	15	8	6	4	4	3	3	3

Lifetime Test			
Endurance 85°C (V_R applied)	Test	**1000 hours**	
	$\triangle C/C_R$	≤ ±20% of initial measured value	6.3 ~ 63 V
		≤ ±30% of initial measured value	4V
	tanδ	≤ 200% of initial specified value	
	I_{Leak}	≤ the initial specified value	
Shelf Life 85°C (V_R = 0)	Test	**1000 hours**	
	$\triangle C/C_R$	≤ ±20% of initial measured value	6.3 ~ 63 V
		≤ ±30% of initial measured value	4V
	tanδ	≤ 200% of initial specified value	
	I_{Leak}	≤ the initial specified value	
	Before measurement: Restore capacitor to 20°C, apply V_R for 30 min according JIS-C-5101-4		

MULTIPLIER K_f for RIPPLE CURRENT vs. FREQUENCY

C_R (µF) / Frequency (Hz)	50/60	100/120	400	1k	10k	50k - 100k
$C_R \leq 10$	0.8	1	1.3	1.45	1.65	1.7
$10 < C_R \leq 100$	0.8	1	1.23	1.36	1.48	1.53
$100 < C_R \leq 470$	0.8	1	1.16	1.25	1.35	1.38

For further information please contact sales@capxon.org

STANDARD RATINGS

Part number shows bulk version with straight leads

V_R (V)	C_R (µF)	ø D (mm)	L (mm)	I_R ▪ Max. Ripple Current +85°C ▪ 120Hz (mA rms)	CapXon Part Number
4	33	4	7	33	SM330M004B070A
	47	4	7	35	SM470M004B070A
	68	4	7	42	SM680M004B070A
	100	4	7	55	SM101M004B070A
	100	5	7	61	SM101M004C070A
	150	5	7	72	SM151M004C070A
	220	6.3	7	110	SM221M004E070A
	330	6.3	7	120	SM331M004E070A
	330	8	7	165	SM331M004F070A
	470	8	7	235	SM471M004F070A
6.3	15	4	7	28	SM150M6R3B070A
	22	4	7	35	SM220M6R3B070A
	33	4	7	40	SM330M6R3B070A
	33	5	7	42	SM330M6R3C070A
	47	4	7	46	SM470M6R3B070A
	47	5	7	48	SM470M6R3C070A
	68	5	7	50	SM680M6R3C070A
	100	5	7	75	SM101M6R3C070A
	100	6.3	7	80	SM101M6R3E070A
	150	6.3	7	82	SM151M6R3E070A
	150	8	7	85	SM151M6R3F070A
	220	6.3	7	120	SM221M6R3E070A
	220	8	7	133	SM221M6R3F070A
	330	8	7	160	SM331M6R3F070A
10	15	4	7	32	SM150M010B070A
	22	4	7	36	SM220M010B070A
	22	5	7	38	SM220M010C070A
	33	4	7	43	SM330M010B070A
	33	5	7	45	SM330M010C070A
	47	4	7	50	SM470M010B070A
	47	5	7	58	SM470M010C070A
	68	5	7	60	SM680M010C070A
	100	5	7	82	SM101M010C070A
	100	6.3	7	90	SM101M010E070A
	150	6.3	7	95	SM151M010E070A
	220	6.3	7	136	SM221M010E070A
	220	8	7	140	SM221M010F070A
	330	8	7	182	SM331M010F070A
16	4.7	4	7	15	SM4R7M016B070A
	6.8	4	7	20	SM6R8M016B070A
	10	4	7	28	SM100M016B070A
	15	4	7	35	SM150M016B070A
	22	4	7	40	SM220M016B070A
	22	5	7	42	SM220M016C070A

See "PACKAGING INFORMATION" to taped or formed products.

STANDARD RATINGS

Part number shows bulk version with straight leads

V_R (V)	C_R (µF)	ø D (mm)	L (mm)	I_R ▪ Max. Ripple Current +85°C ▪ 120Hz (mA rms)	CapXon Part Number
16	33	4	7	45	SM330M016B070A
	33	5	7	55	SM330M016C070A
	47	5	7	65	SM470M016C070A
	47	6.3	7	68	SM470M016E070A
	68	6.3	7	70	SM680M016E070A
	100	6.3	7	98	SM101M016E070A
	100	8	7	105	SM101M016F070A
	150	8	7	111	SM151M016F070A
	220	8	7	152	SM221M016F070A
25	4.7	4	7	20	SM4R7M025B070A
	6.8	4	7	22	SM6R8M025B070A
	10	4	7	30	SM100M025B070A
	15	5	7	37	SM150M025C070A
	22	4	7	46	SM220M025B070A
	22	5	7	50	SM220M025C070A
	33	5	7	52	SM330M025C070A
	33	6.3	7	58	SM330M025E070A
	47	6.3	7	71	SM470M025E070A
	68	6.3	7	79	SM680M025E070A
	100	8	7	113	SM101M025F070A
35	3.3	4	7	18	SM3R3M035B070A
	4.7	4	7	22	SM4R7M035B070A
	6.8	5	7	25	SM6R8M035C070A
	10	4	7	31	SM100M035B070A
	10	5	7	33	SM100M035C070A
	15	5	7	37	SM150M035C070A
	22	5	7	47	SM220M035C070A
	22	6.3	7	55	SM220M035E070A
	33	6.3	7	65	SM330M035E070A
	33	8	7	68	SM330M035F070A
	47	8	7	85	SM470M035F070A
	68	8	7	88	SM680M035F070A
	100	8	7	119	SM101M035F070A
50	0.1	4	7	1.3	SM0R1M050B070A
	0.15	4	7	2	SMR15M050B070A
	0.22	4	7	3	SMR22M050B070A
	0.33	4	7	3.5	SMR33M050B070A
	0.47	4	7	5	SMR47M050B070A
	0.68	4	7	7.5	SMR68M050B070A
	1	4	7	10	SM010M050B070A
	1.5	4	7	13	SM1R5M050B070A
	2.2	4	7	17	SM2R2M050B070A
	3.3	4	7	23	SM3R3M050B070A
	4.7	4	7	24	SM4R7M050B070A

See "PACKAGING INFORMATION" to taped or formed products.

STANDARD RATINGS

Part number shows bulk version with straight leads

V_R (V)	C_R (µF)	ø D (mm)	L (mm)	I_R ▪ Max. Ripple Current +85°C ▪ 120Hz (mA rms)	CapXon Part Number
50	4.7	5	7	26	SM4R7M050C070A
	6.8	5	7	28	SM6R8M050C070A
	10	5	7	35	SM100M050C070A
	10	6.3	7	38	SM100M050E070A
	15	6.3	7	42	SM150M050E070A
	22	6.3	7	59	SM220M050E070A
	22	8	7	63	SM220M050F070A
	33	8	7	75	SM330M050F070A
	47	8	7	88	SM470M050F070A
63	0.1	4	7	1.3	SM0R1M063B070A
	0.15	4	7	2	SMR15M063B070A
	0.22	4	7	3	SMR22M063B070A
	0.33	4	7	4	SMR33M063B070A
	0.47	4	7	6.3	SMR47M063B070A
	0.68	4	7	8	SMR68M063B070A
	1	4	7	12	SM010M063B070A
	1.5	4	7	14	SM1R5M063B070A
	2.2	4	7	18	SM2R2M063B070A
	3.3	5	7	25	SM3R3M063C070A
	4.7	5	7	30	SM4R7M063C070A
	4.7	6.3	7	33	SM4R7M063E070A
	6.8	6.3	7	31	SM6R8M063E070A
	10	6.3	7	48	SM100M063E070A
	15	8	7	45	SM150M063F070A
	22	8	7	65	SM220M063F070A

See "PACKAGING INFORMATION" to taped or formed products.

DIMENSIONS ▪ All dimensions in mm

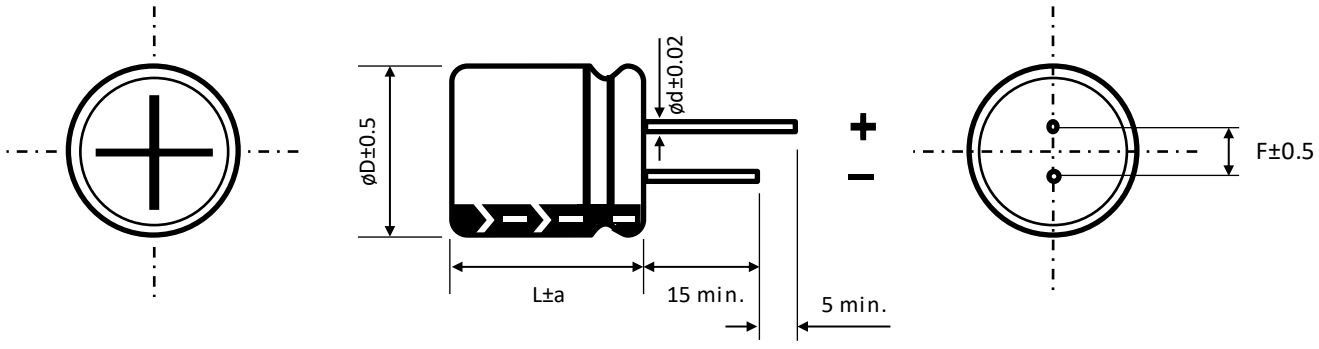

ø D	4	5	6.3	8
F	1.5	2	2.5	3.5
ø d	0.45	0.45	0.5	0.5
a	1	1	1	1

For further information please contact sales@capxon.org

PRECAUTIONS, GUIDELINES AND PACKAGING INFORMATON

Unless otherwise agreed in individual specifications, all products are subject to our “General Precautions and Guidelines” as well as our “Packaging Information”. Please refer to the following links in the table.

General Precautions and Guidelines	Packaging Information Liquid Radial
Page 837	Page 336

DISCLAIMER

All product related data (e.g. specification, statements and general information) are subject to change without any notice. It is necessary that the customer observes all product related technical / application information and handling instructions.

CapXon products are designed and manufactured according to severe quality and safety standards. Under no circumstance, CapXon warrants that any CapXon product is suitable for the purposes intended for your application, even CapXon knows the application. It is customer's duty and obligation to check and make sure that CapXon products are suitable for the purposes intended and select the correct and proper CapXon product. Customers are requested to perform a sufficient validation and reliability evaluation to assure needed safety level and reliability performance by suitable designs and to apply proper safeguards (e.g. redundancies, protective circuits).

Particular operating conditions (ambient temperature, ripple current, voltage, thermal resistance, etc.) as well as storage, production or assembly may affect the performance and the lifetime of the capacitor. Please consult CapXon for lifetime estimation, failure mode considerations or worst-case scenarios according to the product technology, product tolerances / deviations or change of the characteristics of the capacitor due to shipment, storage, handling, production and usage.

For aerospace or military application, life-saving, life-sustaining, safety critical applications or any application where failure may cause severe personal injury or death, please consult us before design-in the capacitor in your application.

Except for the written expressed warranties, CapXon does not impliedly, by assumption or whatever else, warrant, undertake, promise any other warranty or guaranty for any CapXon product.

For further information, please visit our website www.capxongroup.com or contact CapXon directly.

SR SERIES ▪ 7MM HEIGHT, AUDIO 85°C TYPE



KEY FEATURES

LOW HEIGHT AUDIO

- **ALUMINUM ELECTROLYTIC CAPACITOR** ▪ THT type
- Endurance: 85°C ▪ 1000 hours
- Optimized for high density insertion
- Low height ▪ 7mm
- Especially for audio applications

SPECIFICATIONS

Items		Performance Characteristics						
Operating Temperature Range		-40 ~ +85°C						
Rated Voltage Range	V_R	6.3 ~ 50V DC						
Surge Voltage	V_S	$V_S = 1.15 \cdot V_R$						
Capacitance Range	C_R	0.1 ~ 220µF						
Cap. Tolerance	ΔC	±20% (120Hz ▪ 20°C)						
Leakage Current (20°C ▪ V_R applied)	I_{LEAK}	≤ $0.01 \cdot C_R \cdot V_R$ or 3µA, whichever is greater ▪ After 2 minutes [I_{LEAK} (µA) ; C_R (µF) ; V_R (V)]						
Dissipation Factor % (20°C ▪ 120Hz)	tanδ	V_R (V DC)	6.3	10	16	25	35	50
		tanδ (%)	24	20	16	14	12	10
Low Temperature Characteristics at 120Hz	Z ratio max.	V_R (V DC)	6.3	10	16	25	35	50
		Z-25°C/Z+20°C	4	3	2	2	2	2
		Z-40°C/Z+20°C	8	6	4	4	3	3

Lifetime Test		
Endurance 85°C (V_R applied)	Test	**1000 hours**
	△C/C_R	≤ ±20% of initial measured value
	tanδ	≤ 200% of initial specified value
	I_{Leak}	≤ the initial specified value
Shelf Life 85°C (V_R = 0)	Test	**1000 hours**
	△C/C_R	≤ ±20% of initial measured value
	tanδ	≤ 200% of initial specified value
	I_{Leak}	≤ the initial specified value
	Before measurement: Restore capacitor to 20°C, apply V_R for 30 min according JIS-C-5101-4	

MULTIPLIER K_f for RIPPLE CURRENT vs. FREQUENCY

C_R (µF) / Frequency (Hz)	50/60	100/120	300	1k	≥ 10k
0.1 ~ 220	0.7	1	1.17	1.36	1.5

For further information please contact sales@capxon.org

STANDARD RATINGS

Part number shows bulk version with straight leads

V_R (V)	C_R (µF)	ø D (mm)	L (mm)	I_R ▪ Max. Ripple Current +85°C ▪ 120Hz (mA rms)	CapXon Part Number
6.3	22	4	7	34	SR220M6R3B070A
	33	4	7	40	SR330M6R3B070A
	47	4	7	47	SR470M6R3B070A
	100	5	7	76	SR101M6R3C070A
	220	6.3	7	124	SR221M6R3E070A
10	22	4	7	35	SR220M010B070A
	33	4	7	45	SR330M010B070A
	47	5	7	59	SR470M010C070A
	100	6.3	7	88	SR101M010E070A
16	10	4	7	28	SR100M016B070A
	22	4	7	39	SR220M016B070A
	33	5	7	55	SR330M016C070A
	47	5	7	65	SR470M016C070A
	100	6.3	7	98	SR101M016E070A
25	10	4	7	29	SR100M025B070A
	22	5	7	49	SR220M025C070A
	33	5	7	55	SR330M025C070A
	47	6.3	7	71	SR470M025E070A
35	4.7	4	7	23	SR4R7M035B070A
	10	4	7	31	SR100M035B070A
	22	5	7	49	SR220M035C070A
	33	6.3	7	65	SR330M035E070A
50	0.1	4	7	1.1	SR0R1M050B070A
	0.22	4	7	2.6	SRR22M050B070A
	0.33	4	7	3.5	SRR33M050B070A
	0.47	4	7	5	SRR47M050B070A
	1	4	7	10	SR010M050B070A
	2.2	4	7	18	SR2R2M050B070A
	3.3	4	7	23	SR3R3M050B070A
	4.7	4	7	26	SR4R7M050B070A
	10	5	7	35	SR100M050C070A
	22	6.3	7	58	SR220M050E070A

See "PACKAGING INFORMATION" to taped or formed products.

DIMENSIONS ▪ All dimensions in mm

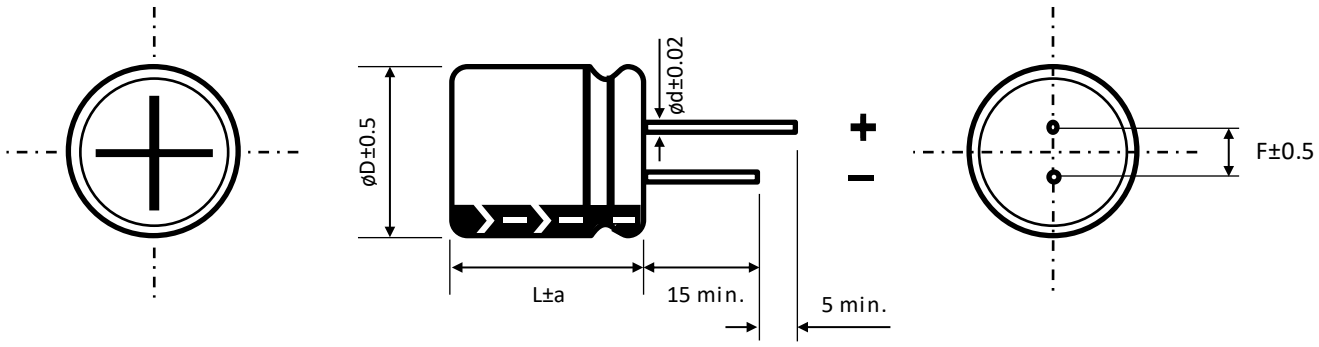

ø D	4	5	6.3
F	1.5	2	2.5
ø d	0.45	0.45	0.5
a	1	1	1

PRECAUTIONS, GUIDELINES AND PACKAGING INFORMATON

Unless otherwise agreed in individual specifications, all products are subject to our “General Precautions and Guidelines” as well as our “Packaging Information”. Please refer to the following links in the table.

General Precautions and Guidelines	Packaging Information Liquid Radial
Page 837	Page 336

DISCLAIMER

All product related data (e.g. specification, statements and general information) are subject to change without any notice. It is necessary that the customer observes all product related technical / application information and handling instructions.

CapXon products are designed and manufactured according to severe quality and safety standards. Under no circumstance, CapXon warrants that any CapXon product is suitable for the purposes intended for your application, even CapXon knows the application. It is customer's duty and obligation to check and make sure that CapXon products are suitable for the purposes intended and select the correct and proper CapXon product. Customers are requested to perform a sufficient validation and reliability evaluation to assure needed safety level and reliability performance by suitable designs and to apply proper safeguards (e.g. redundancies, protective circuits).

Particular operating conditions (ambient temperature, ripple current, voltage, thermal resistance, etc.) as well as storage, production or assembly may affect the performance and the lifetime of the capacitor. Please consult CapXon for lifetime estimation, failure mode considerations or worst-case scenarios according to the product technology, product tolerances / deviations or change of the characteristics of the capacitor due to shipment, storage, handling, production and usage.

For aerospace or military application, life-saving, life-sustaining, safety critical applications or any application where failure may cause severe personal injury or death, please consult us before design-in the capacitor in your application.

Except for the written expressed warranties, CapXon does not impliedly, by assumption or whatever else, warrant, undertake, promise any other warranty or guaranty for any CapXon product.

For further information, please visit our website www.capxongroup.com or contact CapXon directly.

SW SERIES ▪ 5MM HEIGHT, AUDIO 85°C TYPE



KEY FEATURES

LOW HEIGHT AUDIO

- **ALUMINUM ELECTROLYTIC CAPACITOR** ▪ THT type
- Endurance: 85°C ▪ 1000 hours
- Optimized for high density insertion
- Low height ▪ 5mm
- Especially for audio applications

SPECIFICATIONS

Items		Performance Characteristics							
Operating Temperature Range		-40 ~ +85°C							
Rated Voltage Range	V_R	4 ~ 50V DC							
Surge Voltage	V_S	$V_S = 1.15 \cdot V_R$							
Capacitance Range	C_R	0.1 ~ 470µF							
Cap. Tolerance	ΔC	±20% (120Hz ▪ 20°C)							
Leakage Current (20°C ▪ V_R applied)	I_{LEAK}	≤ $0.01 \cdot C_R \cdot V_R$ or 3µA, whichever is greater ▪ After 2 minutes [I_{LEAK} (µA) ; C_R (µF) ; V_R (V)]							
Dissipation Factor % (20°C ▪ 120Hz)	tanδ	V_R (V DC)	4	6.3	10	16	25	35	50
		tanδ (%)	35	24	20	16	14	12	10
Low Temperature Characteristics at 120Hz	Z ratio max.	V_R (V DC)	4	6.3	10	16	25	35	50
		Z-25°C/Z+20°C	7	4	3	2	2	2	2
		Z-40°C/Z+20°C	15	8	6	4	4	3	3

Lifetime Test		
Endurance 85°C (V_R applied)	Test	**1000 hours**
	△C/C_R	≤ ±20% of initial measured value
	tanδ	≤ 200% of initial specified value
	I_{Leak}	≤ the initial specified value
Shelf Life 85°C (V_R = 0)	Test	**1000 hours**
	△C/C_R	≤ ±20% of initial measured value
	tanδ	≤ 200% of initial specified value
	I_{Leak}	≤ the initial specified value
	Before measurement: Restore capacitor to 20°C, apply V_R for 30 min according JIS-C-5101-4	

MULTIPLIER K_f for RIPPLE CURRENT vs. FREQUENCY

C_R (µF) / Frequency (Hz)	50/60	100/120	300	1k	≥ 10k
0.1 ~ 470	0.7	1	1.17	1.36	1.5

For further information please contact sales@capxon.org

STANDARD RATINGS

Part number shows bulk version with straight leads

V_R (V)	C_R (µF)	ø D (mm)	L (mm)	I_R ▪ Max. Ripple Current +85°C ▪ 120Hz (mA rms)	CapXon Part Number
4	33	4	5	30	SW330M004B050A
	47	4	5	33	SW470M004B050A
	100	5	5	54	SW101M004C050A
	220	6.3	5	87	SW221M004E050A
	330	8	5	143	SW331M004F050A
	470	8	5	185	SW471M004F050A
6.3	22	4	5	26	SW220M6R3B050A
	33	5	5	37	SW330M6R3C050A
	47	5	5	42	SW470M6R3C050A
	100	6.3	5	67	SW101M6R3E050A
	220	8	5	112	SW221M6R3F050A
	330	8	5	170	SW331M6R3F050A
10	22	5	5	33	SW220M010C050A
	33	5	5	40	SW330M010C050A
	47	6.3	5	49	SW470M010E050A
	100	8	5	80	SW101M010F050A
	220	8	5	136	SW221M010F050A
16	10	4	5	21	SW100M016B050A
	22	5	5	36	SW220M016C050A
	33	6.3	5	47	SW330M016E050A
	47	6.3	5	58	SW470M016E050A
	100	8	5	92	SW101M016F050A
25	4.7	4	5	15	SW4R7M025B050A
	10	5	5	27	SW100M025C050A
	22	6.3	5	43	SW220M025E050A
	33	6.3	5	52	SW330M025E050A
	47	8	5	70	SW470M025F050A
	100	8	5	109	SW101M025F050A
35	3.3	4	5	13	SW3R3M035B050A
	4.7	4	5	18	SW4R7M035B050A
	10	5	5	29	SW100M035C050A
	22	6.3	5	46	SW220M035E050A
	33	8	5	62	SW330M035F050A
	47	8	5	81	SW470M035F050A
50	0.1	4	5	1.2	SW0R1M050B050A
	0.22	4	5	2.3	SWR22M050B050A
	0.33	4	5	3	SWR33M050B050A
	0.47	4	5	3.9	SWR47M050B050A
	1	4	5	7.3	SW010M050B050A
	2.2	4	5	11	SW2R2M050B050A
	3.3	4	5	15	SW3R3M050B050A
	4.7	5	5	20	SW4R7M050C050A
	10	6.3	5	31	SW100M050E050A
	22	8	5	52	SW220M050F050A
	33	8	5	70	SW330M050F050A

See "PACKAGING INFORMATION" to taped or formed products.

DIMENSIONS ▪ All dimensions in mm

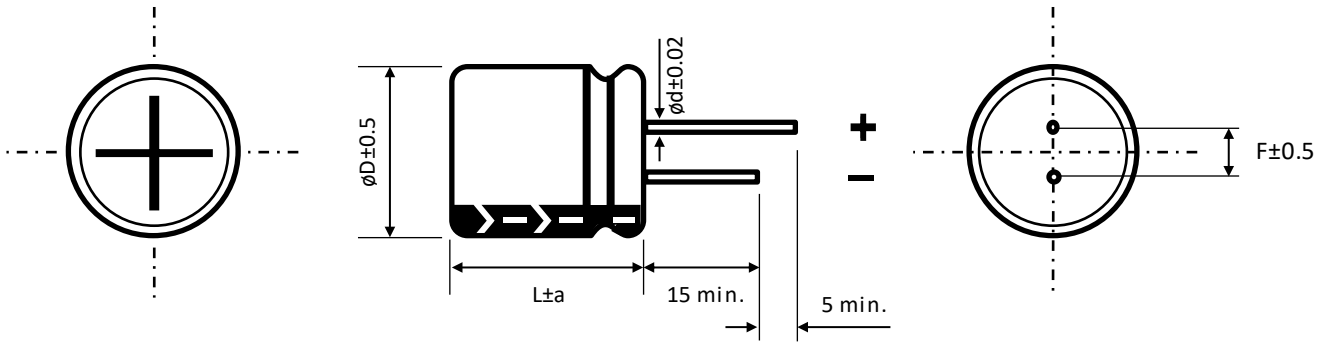

ø D	4	5	6.3	8
F	1.5	2	2.5	3.5
ø d	0.45	0.45	0.45	0.45
a	1	1	1	1

PRECAUTIONS, GUIDELINES AND PACKAGING INFORMATON

Unless otherwise agreed in individual specifications, all products are subject to our “General Precautions and Guidelines” as well as our “Packaging Information”. Please refer to the following links in the table.

General Precautions and Guidelines	Packaging Information Liquid Radial
Page 837	Page 336

DISCLAIMER

All product related data (e.g. specification, statements and general information) are subject to change without any notice. It is necessary that the customer observes all product related technical / application information and handling instructions.

CapXon products are designed and manufactured according to severe quality and safety standards. Under no circumstance, CapXon warrants that any CapXon product is suitable for the purposes intended for your application, even CapXon knows the application. It is customer's duty and obligation to check and make sure that CapXon products are suitable for the purposes intended and select the correct and proper CapXon product. Customers are requested to perform a sufficient validation and reliability evaluation to assure needed safety level and reliability performance by suitable designs and to apply proper safeguards (e.g. redundancies, protective circuits).

Particular operating conditions (ambient temperature, ripple current, voltage, thermal resistance, etc.) as well as storage, production or assembly may affect the performance and the lifetime of the capacitor. Please consult CapXon for lifetime estimation, failure mode considerations or worst-case scenarios according to the product technology, product tolerances / deviations or change of the characteristics of the capacitor due to shipment, storage, handling, production and usage.

For aerospace or military application, life-saving, life-sustaining, safety critical applications or any application where failure may cause severe personal injury or death, please consult us before design-in the capacitor in your application.

Except for the written expressed warranties, CapXon does not impliedly, by assumption or whatever else, warrant, undertake, promise any other warranty or guaranty for any CapXon product.

For further information, please visit our website www.capxongroup.com or contact CapXon directly.

SH SERIES ▪ 7MM, LONG LIFE 85°C TYPE

KEY FEATURES

LOW HEIGHT LONG LIFE



- **ALUMINUM ELECTROLYTIC CAPACITOR** ▪ THT type
- Endurance: 85°C ▪ 2000 hours
- Optimized for high density insertion
- Low height ▪ 7mm
- Miniaturized for space critical applications

SPECIFICATIONS

Items		Performance Characteristics								
Operating Temperature Range		-40 ~ +85°C								
Rated Voltage Range	V_R	4 ~ 63V DC								
Surge Voltage	V_S	$V_S = 1.15 \cdot V_R$								
Capacitance Range	C_R	0.1 ~ 470µF								
Cap. Tolerance	ΔC	±20% (120Hz ▪ 20°C)								
Leakage Current (20°C ▪ V_R applied)	I_{LEAK}	≤ $0.01 \cdot C_R \cdot V_R$ or 3µA, whichever is greater ▪ After 1 minute [I_{LEAK} (µA) ; C_R (µF) ; V_R (V)]								
Dissipation Factor % (20°C ▪ 120Hz)	tanδ	V_R (V DC)	4	6.3	10	16	25	35	50	63
		tanδ (%)	25	22	20	16	14	12	10	9
Low Temperature Characteristics at 120Hz	Z ratio max.	V_R (V DC)	4	6.3	10	16	25	35	50	63
		Z-25°C/Z+20°C	7	4	3	2	2	2	2	2
		Z-40°C/Z+20°C	15	8	6	4	4	3	3	3

Lifetime Test			
Endurance 85°C (V_R applied)	Test	**2000 hours**	
	△C/C_R	≤ ±20% of initial measured value	6.3 ~ 63 V
		≤ ±30% of initial measured value	4V
	tanδ	≤ 200% of initial specified value	
	I_{Leak}	≤ the initial specified value	
Shelf Life 85°C (V_R = 0)	Test	**1000 hours**	
	△C/C_R	≤ ±20% of initial measured value	6.3 ~ 63 V
		≤ ±30% of initial measured value	4V
	tanδ	≤ 200% of initial specified value	
	I_{Leak}	≤ the initial specified value	
	Before measurement: Restore capacitor to 20°C, apply V_R for 30 min according JIS-C-5101-4		

MULTIPLIER K_f for RIPPLE CURRENT vs. FREQUENCY

C_R (µF) / Frequency (Hz)	50/60	100/120	400	1k	10k	50k - 100k
$C_R \leq 10$	0.8	1	1.3	1.45	1.65	1.7
$10 < C_R \leq 100$	0.8	1	1.23	1.36	1.48	1.53
$100 < C_R \leq 470$	0.8	1	1.16	1.25	1.35	1.38

For further information please contact sales@capxon.org

STANDARD RATINGS

Part number shows bulk version with straight leads

V_R (V)	C_R (µF)	ø D (mm)	L (mm)	I_R ▪ Max. Ripple Current +85°C ▪ 120Hz (mA rms)	CapXon Part Number
4	22	4	7	23	SH220M004B070A
	33	4	7	26	SH330M004B070A
	47	4	7	35	SH470M004B070A
	68	5	7	55	SH680M004C070A
	100	5	7	58	SH101M004C070A
	220	6.3	7	65	SH221M004E070A
	330	6.3	7	90	SH331M004E070A
	470	8	7	120	SH471M004F070A
6.3	22	4	7	31	SH220M6R3B070A
	33	4	7	32	SH330M6R3B070A
	33	5	7	35	SH330M6R3C070A
	47	4	7	40	SH470M6R3B070A
	47	5	7	47	SH470M6R3C070A
	68	5	7	55	SH680M6R3C070A
	100	5	7	65	SH101M6R3C070A
	100	6.3	7	75	SH101M6R3E070A
	220	6.3	7	70	SH221M6R3E070A
	220	8	7	90	SH221M6R3F070A
	330	8	7	120	SH331M6R3F070A
10	15	4	7	28	SH150M010B070A
	22	4	7	35	SH220M010B070A
	33	4	7	40	SH330M010B070A
	33	5	7	45	SH330M010C070A
	47	4	7	47	SH470M010B070A
	47	5	7	51	SH470M010C070A
	68	5	7	60	SH680M010C070A
	68	6.3	7	68	SH680M010E070A
	100	5	7	80	SH101M010C070A
	100	6.3	7	90	SH101M010E070A
	220	6.3	7	105	SH221M010E070A
	220	8	7	125	SH221M010F070A
16	6.8	4	7	20	SH6R8M016B070A
	10	4	7	30	SH100M016B070A
	15	4	7	32	SH150M016B070A
	22	4	7	37	SH220M016B070A
	22	5	7	42	SH220M016C070A
	33	4	7	45	SH330M016B070A
	33	5	7	50	SH330M016C070A
	47	5	7	61	SH470M016C070A
	47	6.3	7	67	SH470M016E070A
	68	6.3	7	72	SH680M016E070A
	100	6.3	7	95	SH101M016E070A
	100	8	7	105	SH101M016F070A

See "PACKAGING INFORMATION" to taped or formed products.

STANDARD RATINGS

Part number shows bulk version with straight leads

V_R (V)	C_R (µF)	ø D (mm)	L (mm)	I_R ▪ Max. Ripple Current +85°C ▪ 120Hz (mA rms)	CapXon Part Number
25	4.7	4	7	17	SH4R7M025B070A
	6.8	4	7	21	SH6R8M025B070A
	10	4	7	30	SH100M025B070A
	10	5	7	33	SH100M025C070A
	15	5	7	38	SH150M025C070A
	22	5	7	45	SH220M025C070A
	22	6.3	7	48	SH220M025E070A
	33	5	7	52	SH330M025C070A
	33	6.3	7	60	SH330M025E070A
	47	6.3	7	68	SH470M025E070A
	47	8	7	72	SH470M025F070A
	68	6.3	7	75	SH680M025E070A
	100	8	7	115	SH101M025F070A
35	4.7	4	7	22	SH4R7M035B070A
	6.8	4	7	24	SH6R8M035B070A
	6.8	5	7	28	SH6R8M035C070A
	10	4	7	30	SH100M035B070A
	10	5	7	35	SH100M035C070A
	15	5	7	38	SH150M035C070A
	15	6.3	7	45	SH150M035E070A
	22	5	7	50	SH220M035C070A
	22	6.3	7	58	SH220M035E070A
	33	6.3	7	54	SH330M035E070A
	33	8	7	68	SH330M035F070A
	47	8	7	80	SH470M035F070A
	68	8	7	85	SH680M035F070A
50	0.1	4	7	1.5	SH0R1M050B070A
	0.15	4	7	1.8	SHR15M050B070A
	0.22	4	7	2.5	SHR22M050B070A
	0.33	4	7	3.5	SHR33M050B070A
	0.47	4	7	5	SHR47M050B070A
	0.68	4	7	7	SHR68M050B070A
	1	4	7	10	SH010M050B070A
	1.5	4	7	13	SH1R5M050B070A
	2.2	4	7	19	SH2R2M050B070A
	3.3	4	7	24	SH3R3M050B070A
	4.7	4	7	27	SH4R7M050B070A
	4.7	5	7	29	SH4R7M050C070A
	6.8	5	7	32	SH6R8M050C070A
	6.8	6.3	7	33	SH6R8M050E070A
	10	5	7	35	SH100M050C070A
	10	6.3	7	38	SH100M050E070A
	15	6.3	7	52	SH150M050E070A

See "PACKAGING INFORMATION" to taped or formed products.

For further information please contact sales@capxon.org

STANDARD RATINGS

Part number shows bulk version with straight leads

V_R (V)	C_R (µF)	ø D (mm)	L (mm)	I_R ▪ Max. Ripple Current +85°C ▪ 120Hz (mA rms)	CapXon Part Number
50	22	6.3	7	60	SH220M050E070A
	22	8	7	63	SH220M050F070A
	33	8	7	78	SH330M050F070A
63	0.1	4	7	1.5	SH0R1M063B070A
	0.15	4	7	1.8	SHR15M063B070A
	0.22	4	7	2.5	SHR22M063B070A
	0.33	4	7	3.5	SHR33M063B070A
	0.47	4	7	6	SHR47M063B070A
	0.68	4	7	7	SHR68M063B070A
	1	4	7	12	SH010M063B070A
	1.5	4	7	14	SH1R5M063B070A
	2.2	4	7	19	SH2R2M063B070A
	3.3	5	7	25	SH3R3M063C070A
	4.7	5	7	29	SH4R7M063C070A
	4.7	6.3	7	33	SH4R7M063E070A
	6.8	6.3	7	35	SH6R8M063E070A
	10	6.3	7	40	SH100M063E070A
	15	8	7	55	SH150M063F070A
	22	8	7	65	SH220M063F070A

See "PACKAGING INFORMATION" to taped or formed products

DIMENSIONS ▪ All dimensions in mm

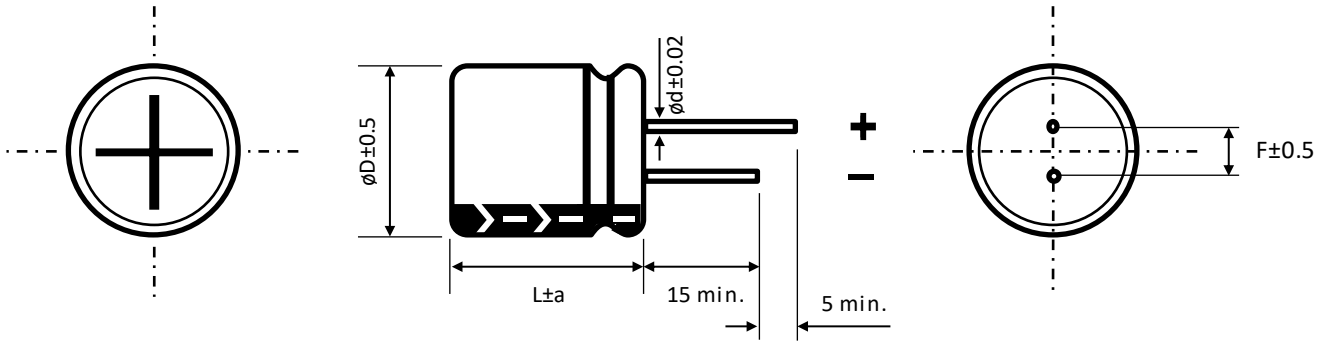

ø D	4	5	6.3	8
F	1.5	2	2.5	3.5
ø d	0.45	0.45	0.5	0.5
a	1	1	1	1

For further information please contact sales@capxon.org

PRECAUTIONS, GUIDELINES AND PACKAGING INFORMATON

Unless otherwise agreed in individual specifications, all products are subject to our “General Precautions and Guidelines” as well as our “Packaging Information”. Please refer to the following links in the table.

General Precautions and Guidelines	Packaging Information Liquid Radial
Page 837	Page 336

DISCLAIMER

All product related data (e.g. specification, statements and general information) are subject to change without any notice. It is necessary that the customer observes all product related technical / application information and handling instructions.

CapXon products are designed and manufactured according to severe quality and safety standards. Under no circumstance, CapXon warrants that any CapXon product is suitable for the purposes intended for your application, even CapXon knows the application. It is customer's duty and obligation to check and make sure that CapXon products are suitable for the purposes intended and select the correct and proper CapXon product. Customers are requested to perform a sufficient validation and reliability evaluation to assure needed safety level and reliability performance by suitable designs and to apply proper safeguards (e.g. redundancies, protective circuits).

Particular operating conditions (ambient temperature, ripple current, voltage, thermal resistance, etc.) as well as storage, production or assembly may affect the performance and the lifetime of the capacitor. Please consult CapXon for lifetime estimation, failure mode considerations or worst-case scenarios according to the product technology, product tolerances / deviations or change of the characteristics of the capacitor due to shipment, storage, handling, production and usage.

For aerospace or military application, life-saving, life-sustaining, safety critical applications or any application where failure may cause severe personal injury or death, please consult us before design-in the capacitor in your application.

Except for the written expressed warranties, CapXon does not impliedly, by assumption or whatever else, warrant, undertake, promise any other warranty or guaranty for any CapXon product.

For further information, please visit our website www.capxongroup.com or contact CapXon directly.

RW SERIES ▪ STANDARD, AUDIO 85°C TYPE



KEY FEATURES

AUDIO

- **ALUMINUM ELECTROLYTIC CAPACITOR** ▪ THT type
- Endurance: 85°C ▪ 2000 hours
- Optimized for cost effective applications
- High capacitance range
- Especially for audio applications

SPECIFICATIONS

Items		Performance Characteristics								
Operating Temperature Range		-40 ~ +85°C								
Rated Voltage Range	V_R	6.3 ~ 100V DC								
Surge Voltage	V_S	$V_S = 1.15 \cdot V_R$								
Capacitance Range	C_R	0.1 ~ 33000µF								
Cap. Tolerance	ΔC	±20% (120Hz ▪ 20°C)								
Leakage Current (20°C ▪ V_R applied)	I_{LEAK}	≤ $0.01 \cdot C_R \cdot V_R$ or 3µA, whichever is greater ▪ After 1 minute [I_{LEAK} (µA) ; C_R (µF) ; V_R (V)]								
Dissipation Factor % (20°C ▪ 120Hz)	tanδ	V_R (V DC)	6.3	10	16	25	35	50	63	100
		tanδ (%)	28	24	20	16	14	12	10	8
		For C_R ≥ 1000µF, add 2% per every multiple 1000µF of rated capacitance value								
Low Temperature Characteristics at 120Hz	Z ratio max.	V_R (V DC)	6.3	10	16	25	35	50	63	100
		Z-25°C/Z+20°C	5	4	3	2	2	2	2	2
		Z-40°C/Z+20°C	12	10	8	5	4	3	3	3
		For capacitance > 1000µF								
		Z-25°C/Z+20°C	Add 0.5 for every multiple 1000µF of rated capacitance value							
		Z-40°C/Z+20°C	Add 1 for every multiple 1000µF of rated capacitance value							

Lifetime Test		
Endurance 85°C (V_R applied)	Test	**2000 hours**
	△C/C_R	≤ ±20% of initial measured value
	tanδ	≤ 200% of initial specified value
	I_{Leak}	≤ the initial specified value
Shelf Life 85°C (V_R = 0)	Test	**1000 hours**
	△C/C_R	≤ ±20% of initial measured value
	tanδ	≤ 200% of initial specified value
	I_{Leak}	≤ the initial specified value
	Before measurement: Restore capacitor to 20°C, apply V_R for 30 min according JIS-C-5101-4	

MULTIPLIER K_f for RIPPLE CURRENT vs. FREQUENCY

C_R (µF) / Frequency (Hz)	50/60	100/120	300	1k	10k
$C_R \leq 47$	0.75	1	1.35	1.57	1.2
$100 < C_R \leq 470$	0.8	1	1.23	1.34	1.5
$1000 < C_R \leq 33000$	0.85	1	1.1	1.13	1.15

For further information please contact sales@capxon.org

STANDARD RATINGS

Part number shows bulk version with straight leads

V_R (V)	C_R (µF)	ø D (mm)	L (mm)	I_R ▪ Max. Ripple Current +85°C ▪ 120Hz (mA rms)	CapXon Part Number
6.3	330	6.3	11	282	RW331M6R3E110A
	470	6.3	11	330	RW471M6R3E110A
	1000	8	11.5	560	RW102M6R3F115A
	2200	10	20	1015	RW222M6R3G200A
	3300	10	20	1245	RW332M6R3G200A
	4700	13	20	1435	RW472M6R3I200A
	6800	13	25	1600	RW682M6R3I250A
	10000	16	25	2000	RW103M6R3J250A
	15000	16	35.5	2620	RW153M6R3J355A
	22000	18	40	3220	RW223M6R3K400A
	33000	22	50	3900	RW333M6R3M500A
10	100	5	11	162	RW101M010C110A
	220	6.3	11	247	RW221M010E110A
	330	6.3	11	300	RW331M010E110A
	470	6.3	11	355	RW471M010E110A
	1000	10	12.5	600	RW102M010G125A
	2200	10	20	1075	RW222M010G200A
	3300	13	20	1410	RW332M010I200A
	4700	13	25	1800	RW472M010I250A
	6800	16	25	2200	RW682M010J250A
	10000	16	35.5	2450	RW103M010J355A
	15000	18	35.5	2900	RW153M010K355A
	22000	22	40	3700	RW223M010M400A
	33000	22	50	4300	RW333M010M500A
16	100	5	11	155	RW101M016C110A
	220	6.3	11	265	RW221M016E110A
	330	8	11.5	365	RW331M016F115A
	470	8	11.5	445	RW471M016F115A
	1000	10	16	780	RW102M016G160A
	2200	13	20	1300	RW222M016I200A
	3300	13	25	1700	RW332M016I250A
	4700	16	25	2100	RW472M016J250A
	6800	16	35.5	2520	RW682M016J355A
	10000	18	35.5	2670	RW103M016K355A
	15000	22	40	3400	RW153M016M400A
	22000	22	50	4200	RW223M016M500A
25	47	5	11	117	RW470M025C110A
	100	6.3	11	187	RW101M025E110A
	220	8	11.5	325	RW221M025F115A
	330	10	12.5	415	RW331M025G125A
	470	10	12.5	535	RW471M025G125A
	1000	10	20	950	RW102M025G200A
	2200	13	25	1550	RW222M025I250A
	3300	16	25	1675	RW332M025J250A

See "PACKAGING INFORMATION" to taped or formed products.

STANDARD RATINGS

Part number shows bulk version with straight leads

V_R (V)	C_R (µF)	ø D (mm)	L (mm)	I_R ▪ Max. Ripple Current +85°C ▪ 120Hz (mA rms)	CapXon Part Number
25	4700	16	31.5	2380	RW472M025J315A
	6800	18	35.5	2650	RW682M025K355A
	10000	22	40	3000	RW103M025M400A
	15000	22	50	3800	RW153M025M500A
35	33	5	11	107	RW330M035C110A
	47	5	11	125	RW470M035C110A
	100	6.3	11	205	RW101M035E110A
	220	10	12.5	370	RW221M035G125A
	330	10	12.5	475	RW331M035G125A
	470	10	16	630	RW471M035G160A
	1000	13	20	1120	RW102M035I200A
	2200	16	25	1650	RW222M035J250A
	3300	16	35.5	2270	RW332M035J355A
	4700	18	35.5	2540	RW472M035K355A
	6800	22	40	3000	RW682M035M400A
50	0.1	5	11	2.1	RW0R1M050C110A
	0.22	5	11	2.7	RWR22M050C110A
	0.33	5	11	4.2	RWR33M050C110A
	0.47	5	11	6	RWR47M050C110A
	1	5	11	12	RW010M050C110A
	2.2	5	11	24	RW2R2M050C110A
	3.3	5	11	35	RW3R3M050C110A
	4.7	5	11	41	RW4R7M050C110A
	10	5	11	65	RW100M050C110A
	22	5	11	97	RW220M050C110A
	33	5	11	120	RW330M050C110A
	47	6.3	11	150	RW470M050E110A
	100	8	11.5	255	RW101M050F115A
	220	10	12.5	417	RW221M050G125A
	330	10	16	580	RW331M050G160A
	470	13	20	770	RW471M050I200A
	1000	13	25	1320	RW102M050I250A
	2200	16	35.5	2090	RW222M050J355A
	3300	18	35.5	2430	RW332M050K355A
	4700	22	40	2900	RW472M050M400A
	6800	22	50	3500	RW682M050M500A
63	0.1	5	11	1.5	RW0R1M063C110A
	0.22	5	11	3	RWR22M063C110A
	0.33	5	11	5	RWR33M063C110A
	0.47	5	11	7	RWR47M063C110A
	1	5	11	15	RW010M063C110A
	2.2	5	11	28	RW2R2M063C110A
	3.3	5	11	35	RW3R3M063C110A
	4.7	5	11	45	RW4R7M063C110A

See "PACKAGING INFORMATION" to taped or formed products.

STANDARD RATINGS

Part number shows bulk version with straight leads

V_R (V)	C_R (µF)	ø D (mm)	L (mm)	I_R ▪ Max. Ripple Current +85°C ▪ 120Hz (mA rms)	CapXon Part Number
63	10	5	11	70	RW100M063C110A
	22	5	11	107	RW220M063C110A
	33	6.3	11	137	RW330M063E110A
	47	6.3	11	172	RW470M063E110A
	100	10	12.5	300	RW101M063G125A
	220	10	16	485	RW221M063G160A
	330	10	20	670	RW331M063G200A
	470	13	20	880	RW471M063I200A
	1000	16	25	1350	RW102M063J250A
	2200	18	35.5	2220	RW222M063K355A
	3300	22	40	2700	RW332M063M400A
	4700	22	50	3400	RW472M063M500A
100	0.1	5	11	2.1	RW0R1M100C110A
	0.22	5	11	4.7	RWR22M100C110A
	0.33	5	11	7.5	RWR33M100C110A
	0.47	5	11	11	RWR47M100C110A
	1	5	11	21	RW010M100C110A
	2.2	5	11	31	RW2R2M100C110A
	3.3	5	11	40	RW3R3M100C110A
	4.7	5	11	46	RW4R7M100C110A
	10	6.3	11	75	RW100M100E110A
	22	6.3	11	125	RW220M100E110A
	33	8	11.5	165	RW330M100F115A
	47	10	12.5	220	RW470M100G125A
	100	10	20	370	RW101M100G200A
	220	13	25	615	RW221M100I250A
	330	13	25	755	RW331M100I250A
	470	16	25	1000	RW471M100J250A
	1000	18	40	1500	RW102M100K400A
	2200	22	50	2400	RW222M100M500A

See "PACKAGING INFORMATION" to taped or formed products.

DIMENSIONS ▪ All dimensions in mm

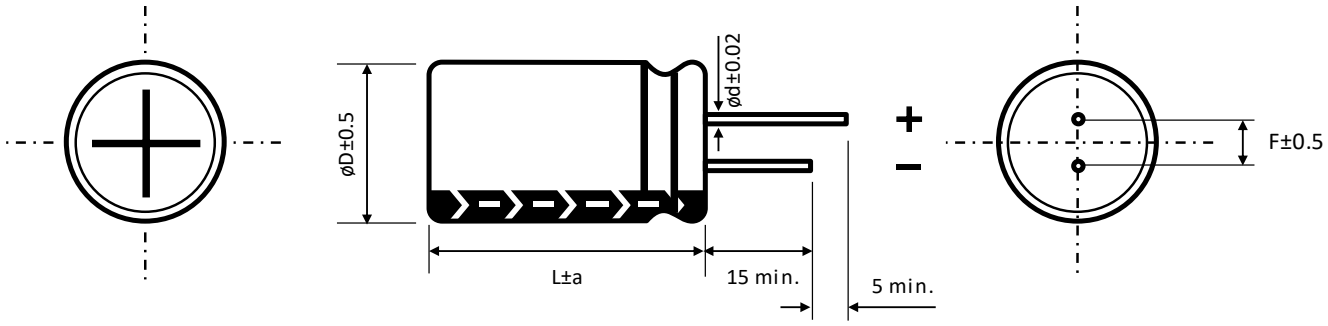

ø D	5	6.3	8		10	13	16	18	22
F	2	2.5	3.5		5	5	7.5	7.5	10
ø d	0.5		L < 20	L ≥ 20	0.6		0.8		
			0.5	0.6					

a	ø D < 16	ø D = 16		ø D = 18		ø D > 18
	1.5	L = 25 to 35.5	L < 25 and L ≥ 40	L = 25 to 31.5	L < 25 and L ≥ 35.5	2
		1.5	2	1.5	2	

PRECAUTIONS, GUIDELINES AND PACKAGING INFORMATON

Unless otherwise agreed in individual specifications, all products are subject to our “General Precautions and Guidelines” as well as our “Packaging Information”. Please refer to the following links in the table.

General Precautions and Guidelines	Packaging Information Liquid Radial
Page 837	Page 336

DISCLAIMER

All product related data (e.g. specification, statements and general information) are subject to change without any notice. It is necessary that the customer observes all product related technical / application information and handling instructions.

CapXon products are designed and manufactured according to severe quality and safety standards. Under no circumstance, CapXon warrants that any CapXon product is suitable for the purposes intended for your application, even CapXon knows the application. It is customer's duty and obligation to check and make sure that CapXon products are suitable for the purposes intended and select the correct and proper CapXon product. Customers are requested to perform a sufficient validation and reliability evaluation to assure needed safety level and reliability performance by suitable designs and to apply proper safeguards (e.g. redundancies, protective circuits).

Particular operating conditions (ambient temperature, ripple current, voltage, thermal resistance, etc.) as well as storage, production or assembly may affect the performance and the lifetime of the capacitor. Please consult CapXon for lifetime estimation, failure mode considerations or worst-case scenarios according to the product technology, product tolerances / deviations or change of the characteristics of the capacitor due to shipment, storage, handling, production and usage.

For aerospace or military application, life-saving, life-sustaining, safety critical applications or any application where failure may cause severe personal injury or death, please consult us before design-in the capacitor in your application.

Except for the written expressed warranties, CapXon does not impliedly, by assumption or whatever else, warrant, undertake, promise any other warranty or guaranty for any CapXon product.

For further information, please visit our website www.capxongroup.com or contact CapXon directly.

NR SERIES ▪ STANDARD, BI-POLAR, AUDIO 85°C TYPE



KEY FEATURES

BI-POLAR AUDIO

- **ALUMINUM ELECTROLYTIC CAPACITOR** ▪ THT type
- Endurance: 85°C ▪ 2000 hours
- Bi-Polar, Non-polarized type
- Excellent frequency characteristics
- Especially for audio applications

SPECIFICATIONS

Items		Performance Characteristics								
Operating Temperature Range		-40 ~ +85°C								
Rated Voltage Range	V_R	6.3 ~ 100V DC								
Surge Voltage	V_S	$V_S = 1.15 \cdot V_R$								
Capacitance Range	C_R	0.15 ~ 1000µF								
Cap. Tolerance	ΔC	±20% (120Hz ▪ 20°C)								
Leakage Current (20°C ▪ V_R applied)	I_{LEAK}	≤ $0.03 \cdot C_R \cdot V_R$ or 3µA, whichever is greater ▪ After 1 minute [I_{LEAK} (µA) ; C_R (µF) ; V_R (V)]								
Dissipation Factor % (20°C ▪ 120Hz)	tanδ	V_R (V DC)	6.3	10	16	25	35	50	63	100
		tanδ (%)	24	20	16	16	14	12	10	10
		For C_R ≥ 1000µF, add 2% per every multiple 1000µF of rated capacitance value								
Low Temperature Characteristics at 120Hz	Z ratio max.	V_R (V DC)	6.3	10	16	25	35	50	63	100
		Z-25°C/Z+20°C	4	3	2	2	2	2	2	2
		Z-40°C/Z+20°C	8	6	4	4	3	3	3	3
		For capacitance > 1000µF								
		Z-25°C/Z+20°C	Add 0.5 for every multiple 1000µF of rated capacitance value							
		Z-40°C/Z+20°C	Add 1 for every multiple 1000µF of rated capacitance value							

Lifetime Test		
Endurance 85°C (V_R applied)	Test	**2000 hours**
	△C/C_R	≤ ±20% of initial measured value
	tanδ	≤ 200% of initial specified value
	I_{Leak}	≤ the initial specified value
Shelf Life 85°C (V_R = 0)	Test	**1000 hours**
	△C/C_R	≤ ±20% of initial measured value
	tanδ	≤ 200% of initial specified value
	I_{Leak}	≤ the initial specified value
	Before measurement: Restore capacitor to 20°C, apply V_R for 30 min according JIS-C-5101-4	

MULTIPLIER K_f for RIPPLE CURRENT vs. FREQUENCY

C_R (µF) / Frequency (Hz)	50/60	100/120	400	1k	10k	50k - 100k
C_R ≤ 10	0.8	1	1.3	1.45	1.65	1.7
10 < C_R ≤ 100	0.8	1	1.23	1.36	1.48	1.53
100 < C_R ≤ 1000	0.8	1	1.16	1.25	1.35	1.38

For further information please contact sales@capxon.org

STANDARD RATINGS

Part number shows bulk version with straight leads

V_R (V)	C_R (µF)	ø D (mm)	L (mm)	I_R ▪ Max. Ripple Current +85°C ▪ 120Hz (mA rms)	CapXon Part Number
6.3	33	5	11	62	NR330M6R3C110A
	47	6.3	11	76	NR470M6R3E110A
	100	8	11.5	154	NR101M6R3F115A
	220	10	12.5	245	NR221M6R3G125A
	330	10	16	330	NR331M6R3G160A
	470	10	20	360	NR471M6R3G200A
	1000	13	25	910	NR102M6R3I250A
10	22	5	11	60	NR220M010C110A
	33	6.3	11	70	NR330M010E110A
	47	6.3	11	95	NR470M010E110A
	100	10	12.5	188	NR101M010G125A
	220	10	16	294	NR221M010G160A
	330	10	20	360	NR331M010G200A
	470	13	20	538	NR471M010I200A
	1000	16	25	940	NR102M010J250A
16	10	5	11	43	NR100M016C110A
	22	6.3	11	71	NR220M016E110A
	33	6.3	11	90	NR330M016E110A
	47	8	11.5	122	NR470M016F115A
	100	10	12.5	208	NR101M016G125A
	220	10	20	360	NR221M016G200A
	330	13	20	480	NR331M016I200A
	470	13	25	638	NR471M016I250A
	1000	16	31.5	1090	NR102M016J315A
25	4.7	5	11	26	NR4R7M025C110A
	10	5	11	44	NR100M025C110A
	22	6.3	11	71	NR220M025E110A
	33	8	11.5	110	NR330M025F115A
	47	10	12.5	150	NR470M025G125A
	100	10	16	250	NR101M025G160A
	220	13	25	478	NR221M025I250A
	330	13	25	615	NR331M025I250A
	470	16	25	720	NR471M025J250A
35	4.7	5	11	34	NR4R7M035C110A
	10	6.3	11	48	NR100M035E110A
	22	8	11.5	96	NR220M035F115A
	33	10	12.5	135	NR330M035G125A
	47	10	12.5	154	NR470M035G125A
	100	10	20	275	NR101M035G200A
	220	13	25	560	NR221M035I250A
	330	16	25	670	NR331M035J250A

See "PACKAGING INFORMATION" to taped or formed products.

STANDARD RATINGS

Part number shows bulk version with straight leads

V_R (V)	C_R (µF)	ø D (mm)	L (mm)	I_R ▪ Max. Ripple Current +85°C ▪ 120Hz (mA rms)	CapXon Part Number
50	0.47	5	11	12	NRR47M050C110A
	1	5	11	18	NR010M050C110A
	1.8	5	11	22	NR1R8M050C110A
	2.2	5	11	27	NR2R2M050C110A
	3.3	5	11	29	NR3R3M050C110A
	4.7	6.3	11	42	NR4R7M050E110A
	10	8	11.5	65	NR100M050F115A
	22	10	12.5	118	NR220M050G125A
	33	10	16	155	NR330M050G160A
	47	10	20	200	NR470M050G200A
	100	13	25	370	NR101M050I250A
	220	16	25	645	NR221M050J250A
	330	16	31.5	760	NR331M050J315A
63	0.47	6.3	11	14	NRR47M063E110A
	1	6.3	11	22	NR010M063E110A
	1.8	6.3	11	26	NR1R8M063E110A
	2.2	6.3	11	33	NR2R2M063E110A
	3.3	8	11.5	36	NR3R3M063F115A
	4.7	8	11.5	44	NR4R7M063F115A
	10	8	11.5	73	NR100M063F115A
	22	10	12.5	125	NR220M063G125A
	33	10	16	170	NR330M063G160A
	47	10	20	215	NR470M063G200A
	100	13	25	384	NR101M063I250A
100	0.15	6.3	11	13	NRR15M100E110A
	0.47	6.3	11	17	NRR47M100E110A
	1	6.3	11	25	NR010M100E110A
	1.8	6.3	11	32	NR1R8M100E110A
	2.2	6.3	11	39	NR2R2M100E110A
	3.3	8	11.5	49	NR3R3M100F115A
	4.7	10	12.5	60	NR4R7M100G125A
	10	10	16	98	NR100M100G160A
	22	10	20	165	NR220M100G200A
	33	13	20	275	NR330M100I200A

See "PACKAGING INFORMATION" to taped or formed products.

DIMENSIONS ▪ All dimensions in mm

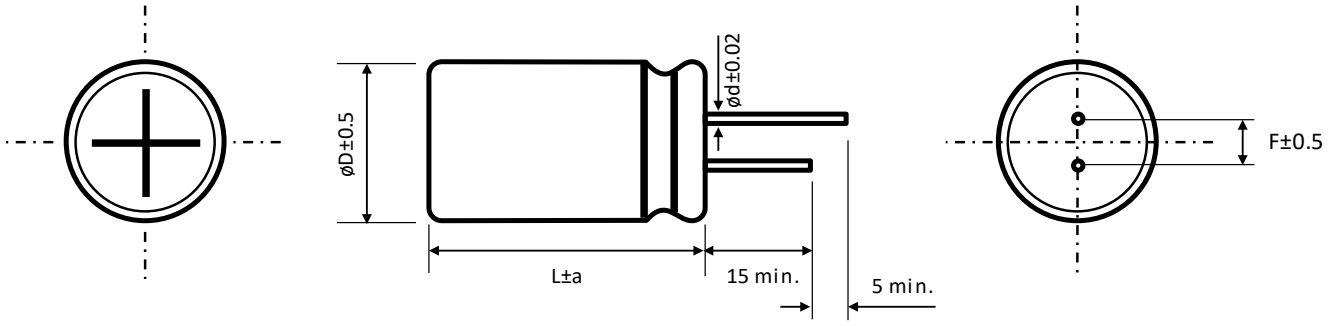

ø D	5	6.3	8	10	13	16
F	2	2.5	3.5	5	5	7.5
ø d	0.5			0.6		0.8
a	1.5			1.5		1.5

PRECAUTIONS, GUIDELINES AND PACKAGING INFORMATON

Unless otherwise agreed in individual specifications, all products are subject to our “General Precautions and Guidelines” as well as our “Packaging Information”. Please refer to the following links in the table.

General Precautions and Guidelines	Packaging Information Liquid Radial
Page 837	Page 336

DISCLAIMER

All product related data (e.g. specification, statements and general information) are subject to change without any notice. It is necessary that the customer observes all product related technical / application information and handling instructions.

CapXon products are designed and manufactured according to severe quality and safety standards. Under no circumstance, CapXon warrants that any CapXon product is suitable for the purposes intended for your application, even CapXon knows the application. It is customer's duty and obligation to check and make sure that CapXon products are suitable for the purposes intended and select the correct and proper CapXon product. Customers are requested to perform a sufficient validation and reliability evaluation to assure needed safety level and reliability performance by suitable designs and to apply proper safeguards (e.g. redundancies, protective circuits).

Particular operating conditions (ambient temperature, ripple current, voltage, thermal resistance, etc.) as well as storage, production or assembly may affect the performance and the lifetime of the capacitor. Please consult CapXon for lifetime estimation, failure mode considerations or worst-case scenarios according to the product technology, product tolerances / deviations or change of the characteristics of the capacitor due to shipment, storage, handling, production and usage.

For aerospace or military application, life-saving, life-sustaining, safety critical applications or any application where failure may cause severe personal injury or death, please consult us before design-in the capacitor in your application.

Except for the written expressed warranties, CapXon does not impliedly, by assumption or whatever else, warrant, undertake, promise any other warranty or guaranty for any CapXon product.

For further information, please visit our website www.capxongroup.com or contact CapXon directly.

GS SERIES ▪ STANDARD 85°C TYPE



KEY FEATURES

- **ALUMINUM ELECTROLYTIC CAPACITOR** ▪ THT type
- Endurance: 85°C ▪ 2000 hours
- Optimized for cost effective applications
- High capacitance range
- Wide voltage range, up to 450V

SPECIFICATIONS

Items		Performance Characteristics							
Operating Temperature Range		-40 ~ +85°C				-25 ~ +85°C			
Rated Voltage Range	V_R	6.3 ~ 100V DC				160 ~ 450V DC			
Surge Voltage	V_S	($V_R \le 315V$): $V_S = 1.15 \cdot V_R$				($V_R > 315V$): $V_S = 1.10 \cdot V_R$			
Capacitance Range	C_R	0.1 ~ 33000µF				0.47 ~ 560µF			
Cap. Tolerance	ΔC	±20% (120Hz ▪ 20°C)							
Leakage Current (20°C ▪ V_R applied)	I_{LEAK}	≤ $0.01 \cdot C_R \cdot V_R$ or 3µA, whichever is greater ▪ After 1 minute				≤ $0.03 \cdot C_R \cdot V_R$ or 3µA, whichever is greater ▪ After 1 minute			
		[I_{LEAK} (µA) ; C_R (µF) ; V_R (V)]							
Dissipation Factor % (20°C ▪ 120Hz)	tanδ	V_R (V DC)	6.3	10	16	25	35	50	63	100
		tanδ (%)	22	19	16	14	12	10	9	8
		V_R (V DC)	160	200	250	350	400	450		
		tanδ (%)	12	12	12	15	15	17		
		For $C_R \ge 1000µF$, add 2% per every multiple 1000µF of rated capacitance value								
Low Temperature Characteristics at 120Hz	Z ratio max.	V_R (V DC)	6.3	10	16	25	35	50	63	100
		Z-25°C/Z+20°C	4	3	2	2	2	2	2	2
		Z-40°C/Z+20°C	8	6	4	3	3	3	3	3
		V_R (V DC)	160	200	250	350	400	450		
		Z-25°C/Z+20°C	2	2	3	5	15	15		
		For capacitance > 1000µF								
		Z-25°C/Z+20°C	Add 0.5 for every multiple 1000µF of rated capacitance value							
		Z-40°C/Z+20°C	Add 1 for every multiple 1000µF of rated capacitance value							

Lifetime Test		
Endurance 85°C (V_R & I_R applied)	Test	**2000 hours**
	△C/C_R	≤ ±20% of initial measured value
	tanδ	≤ 200% of initial specified value
	I_{Leak}	≤ the initial specified value
Shelf Life 85°C (V_R = 0)	Test	**1000 hours**
	△C/C_R	≤ ±20% of initial measured value
	tanδ	≤ 200% of initial specified value
	I_{Leak}	≤ the initial specified value
	Before measurement: Restore capacitor to 20°C, apply V_R for 30 min according JIS-C-5101-4	

For further information please contact sales@capxon.org

STANDARD RATINGS

Part number shows bulk version with straight leads

V_R (V)	C_R (µF)	ø D (mm)	L (mm)	I_R ▪ Max. Ripple Current +85°C ▪ 120Hz (mA rms)	CapXon Part Number
6.3	33	5	11	72	GS330M6R3C110A
	47	5	11	88	GS470M6R3C110A
	68	5	11	110	GS680M6R3C110A
	100	5	11	143	GS101M6R3C110A
	120	5	11	165	GS121M6R3C110A
	150	5	11	198	GS151M6R3C110A
	180	5	11	220	GS181M6R3C110A
	220	5	11	242	GS221M6R3C110A
	220	6.3	11	264	GS221M6R3E110A
	330	6.3	11	330	GS331M6R3E110A
	470	6.3	11	385	GS471M6R3E110A
	470	8	11.5	418	GS471M6R3F115A
	560	8	11.5	473	GS561M6R3F115A
	680	8	11.5	539	GS681M6R3F115A
	820	8	11.5	605	GS821M6R3F115A
	1000	8	11.5	649	GS102M6R3F115A
	1000	10	12.5	715	GS102M6R3G125A
	1200	10	12.5	814	GS122M6R3G125A
	1500	10	16	935	GS152M6R3G160A
	1800	10	16	1035	GS182M6R3G160A
	2200	10	20	1135	GS222M6R3G200A
	2700	10	20	1353	GS272M6R3G200A
	3300	10	20	1430	GS332M6R3G200A
	3300	13	20	1485	GS332M6R3I200A
	3900	13	20	1529	GS392M6R3I200A
	4700	13	20	1672	GS472M6R3I200A
	4700	13	25	1870	GS472M6R3I250A
	5600	13	25	2002	GS562M6R3I250A
	6800	16	25	2310	GS682M6R3J250A
	8200	16	25	2332	GS822M6R3J250A
	10000	16	31.5	2530	GS103M6R3J315A
	12000	16	35.5	2783	GS123M6R3J355A
	15000	16	35.5	2948	GS153M6R3J355A
	15000	18	35.5	3168	GS153M6R3K355A
	18000	18	35.5	3300	GS183M6R3K355A
	22000	18	40	3575	GS223M6R3K400A
	33000	22	40	4290	GS333M6R3M400A
10	22	5	11	66	GS220M010C110A
	33	5	11	88	GS330M010C110A
	47	5	11	105	GS470M010C110A
	68	5	11	132	GS680M010C110A
	100	5	11	198	GS101M010C110A
	120	5	11	209	GS121M010C110A
	150	5	11	231	GS151M010C110A

See "PACKAGING INFORMATION" to taped or formed products.

STANDARD RATINGS

Part number shows bulk version with straight leads

V_R (V)	C_R (µF)	ø D (mm)	L (mm)	I_R ▪ Max. Ripple Current +85°C ▪ 120Hz (mA rms)	CapXon Part Number
10	180	6.3	11	253	GS181M010E110A
	220	6.3	11	294	GS221M010E110A
	330	6.3	11	363	GS331M010E110A
	470	6.3	11	418	GS471M010E110A
	470	8	11.5	440	GS471M010F115A
	560	8	11.5	506	GS561M010F115A
	680	8	11.5	572	GS681M010F115A
	820	10	12.5	671	GS821M010G125A
	1000	8	16	725	GS102M010F160A
	1000	8	20	803	GS102M010F200A
	1000	10	12.5	726	GS102M010G125A
	1200	10	16	902	GS122M010G160A
	1500	10	16	1001	GS152M010G160A
	1800	10	20	1089	GS182M010G200A
	2200	10	20	1210	GS222M010G200A
	2200	13	20	1330	GS222M010I200A
	2700	13	20	1419	GS272M010I200A
	3300	13	20	1540	GS332M010I200A
	3900	13	20	1760	GS392M010I200A
	4700	13	25	1980	GS472M010I250A
	5600	16	25	2189	GS562M010J250A
	6800	16	25	2475	GS682M010J250A
	8200	16	31.5	2541	GS822M010J315A
	10000	16	35.5	2640	GS103M010J355A
	10000	18	35.5	2915	GS103M010K355A
	12000	18	35.5	3025	GS123M010K355A
	15000	18	35.5	3310	GS153M010K355A
	18000	18	40	3410	GS183M010K400A
	22000	22	40	4092	GS223M010M400A
	33000	22	50	4620	GS333M010M500A
16	10	5	11	44	GS100M016C110A
	22	5	11	83	GS220M016C110A
	33	5	11	84	GS330M016C110A
	47	5	11	132	GS470M016C110A
	68	5	11	149	GS680M016C110A
	100	5	11	176	GS101M016C110A
	100	6.3	11	204	GS101M016E110A
	120	6.3	11	231	GS121M016E110A
	150	6.3	11	253	GS151M016E110A
	180	6.3	11	275	GS181M016E110A
	220	6.3	11	308	GS221M016E110A
	220	8	11.5	352	GS221M016F115A
	330	8	11.5	407	GS331M016F115A
	470	8	11.5	517	GS471M016F115A

See "PACKAGING INFORMATION" to taped or formed products.

STANDARD RATINGS

Part number shows bulk version with straight leads

V_R (V)	C_R (µF)	ø D (mm)	L (mm)	I_R ▪ Max. Ripple Current +85°C ▪ 120Hz (mA rms)	CapXon Part Number
16	560	10	12.5	572	GS561M016G125A
	680	8	16	640	GS681M016F160A
	680	10	12.5	682	GS681M016G125A
	820	10	16	803	GS821M016G160A
	1000	10	16	869	GS102M016G160A
	1200	10	16	979	GS122M016G160A
	1500	10	20	1100	GS152M016G200A
	1800	13	20	1298	GS182M016I200A
	2200	13	20	1485	GS222M016I200A
	2700	13	20	1716	GS272M016I200A
	3300	13	20	1750	GS332M016I200A
	3300	13	25	1870	GS332M016I250A
	3900	16	25	2002	GS392M016J250A
	4700	16	25	2310	GS472M016J250A
	5600	16	31.5	2453	GS562M016J315A
	6800	16	31.5	2805	GS682M016J315A
	8200	16	35.5	2893	GS822M016J355A
	10000	18	35.5	2970	GS103M016K355A
	10000	18	40	3190	GS103M016K400A
	12000	18	35.5	3058	GS123M016K355A
	12000	18	40	3212	GS123M016K400A
	15000	22	40	3905	GS153M016M400A
25	4.7	5	11	34	GS4R7M025C110A
	10	5	11	50	GS100M025C110A
	22	5	11	94	GS220M025C110A
	33	5	11	105	GS330M025C110A
	47	5	11	132	GS470M025C110A
	68	6.3	11	176	GS680M025E110A
	100	6.3	11	209	GS101M025E110A
	120	6.3	11	253	GS121M025E110A
	150	6.3	11	275	GS151M025E110A
	180	6.3	11	280	GS181M025E110A
	180	8	11.5	319	GS181M025F115A
	220	6.3	11	310	GS221M025E110A
	220	8	11.5	363	GS221M025F115A
	330	8	11.5	451	GS331M025F115A
	330	10	12.5	484	GS331M025G125A
	470	8	11.5	561	GS471M025F115A
	470	10	12.5	594	GS471M025G125A
	560	10	16	693	GS561M025G160A
	680	10	16	792	GS681M025G160A
	680	10	20	825	GS681M025G200A
	820	10	20	891	GS821M025G200A
	1000	10	20	1050	GS102M025G200A

See "PACKAGING INFORMATION" to taped or formed products.

STANDARD RATINGS

Part number shows bulk version with straight leads

V_R (V)	C_R (µF)	ø D (mm)	L (mm)	I_R ▪ Max. Ripple Current +85°C ▪ 120Hz (mA rms)	CapXon Part Number
25	1200	13	20	1155	GS122M025I200A
	1500	13	20	1353	GS152M025I200A
	1800	13	20	1496	GS182M025I200A
	2200	13	25	1705	GS222M025I250A
	2700	16	25	1804	GS272M025J250A
	3300	16	25	1870	GS332M025J250A
	3300	16	31.5	2145	GS332M025J315A
	3900	16	31.5	2343	GS392M025J315A
	4700	16	31.5	2640	GS472M025J315A
	5600	18	31.5	2816	GS562M025K315A
	6800	18	35.5	2970	GS682M025K355A
	8200	18	35.5	2981	GS822M025K355A
	10000	22	40	3960	GS103M025M400A
35	4.7	5	11	44	GS4R7M035C110A
	10	5	11	66	GS100M035C110A
	22	5	11	108	GS220M035C110A
	33	5	11	121	GS330M035C110A
	47	5	11	143	GS470M035C110A
	47	6.3	11	154	GS470M035E110A
	68	6.3	11	198	GS680M035E110A
	100	6.3	11	231	GS101M035E110A
	100	8	11.5	253	GS101M035F115A
	120	8	11.5	275	GS121M035F115A
	150	8	11.5	308	GS151M035F115A
	180	8	11.5	352	GS181M035F115A
	220	8	11.5	385	GS221M035F115A
	220	10	12.5	407	GS221M035G125A
	330	10	12.5	528	GS331M035G125A
	330	10	16	539	GS331M035G160A
	470	10	16	693	GS471M035G160A
	470	10	20	748	GS471M035G200A
	560	10	20	847	GS561M035G200A
	680	10	20	891	GS681M035G200A
	820	13	20	1045	GS821M035I200A
	1000	13	20	1265	GS102M035I200A
	1200	13	20	1375	GS122M035I200A
	1500	13	25	1570	GS152M035I250A
	1800	16	25	1749	GS182M035J250A
	2200	16	25	1870	GS222M035J250A
	2200	16	31.5	1980	GS222M035J315A
	2700	16	31.5	2178	GS272M035J315A
	3300	16	31.5	2365	GS332M035J315A
	3300	16	35.5	2552	GS332M035J355A
	3900	18	31.5	2640	GS392M035K315A

See "PACKAGING INFORMATION" to taped or formed products.

STANDARD RATINGS

Part number shows bulk version with straight leads

V_R (V)	C_R (µF)	ø D (mm)	L (mm)	I_R ▪ Max. Ripple Current +85°C ▪ 120Hz (mA rms)	CapXon Part Number
35	4700	18	35.5	2860	GS472M035K355A
	5600	18	40	2915	GS562M035K400A
	6800	22	40	3630	GS682M035M400A
50	0.1	5	11	3.3	GS0R1M050C110A
	0.22	5	11	3.3	GSR22M050C110A
	0.33	5	11	5.5	GSR33M050C110A
	0.47	5	11	7.5	GSR47M050C110A
	1	5	11	17	GS010M050C110A
	2.2	5	11	28	GS2R2M050C110A
	3.3	5	11	39	GS3R3M050C110A
	4.7	5	11	46	GS4R7M050C110A
	10	5	11	72	GS100M050C110A
	22	5	11	110	GS220M050C110A
	33	5	11	132	GS330M050C110A
	33	6.3	11	138	GS330M050E110A
	47	6.3	11	165	GS470M050E110A
	68	8	11.5	220	GS680M050F115A
	100	8	11.5	286	GS101M050F115A
	120	8	11.5	319	GS121M050F115A
	150	10	12.5	363	GS151M050G125A
	180	10	12.5	418	GS181M050G125A
	220	10	12.5	468	GS221M050G125A
	220	10	16	484	GS221M050G160A
	330	10	16	649	GS331M050G160A
	330	10	20	671	GS331M050G200A
	470	10	20	828	GS471M050G200A
	470	13	20	858	GS471M050I200A
	560	13	20	902	GS561M050I200A
	680	13	20	1056	GS681M050I200A
	820	13	25	1287	GS821M050I250A
	1000	13	25	1485	GS102M050I250A
	1000	16	25	1540	GS102M050J250A
	1200	16	25	1617	GS122M050J250A
	1500	16	31.5	1848	GS152M050J315A
	1800	16	31.5	2112	GS182M050J315A
	2200	16	35.5	2310	GS222M050J355A
	2700	18	31.5	2420	GS272M050K315A
	3300	18	35.5	2750	GS332M050K355A
	3900	18	40	2871	GS392M050K400A
	4700	22	40	3355	GS472M050M400A
63	0.1	5	11	4	GS0R1M063C110A
	0.22	5	11	4	GSR22M063C110A
	0.33	5	11	6	GSR33M063C110A
	0.47	5	11	8	GSR47M063C110A

See "PACKAGING INFORMATION" to taped or formed products.

For further information please contact sales@capxon.org

STANDARD RATINGS

Part number shows bulk version with straight leads

V_R (V)	C_R (µF)	ø D (mm)	L (mm)	I_R ▪ Max. Ripple Current +85°C ▪ 120Hz (mA rms)	CapXon Part Number
63	1	5	11	17	GS010M063C110A
	2.2	5	11	31	GS2R2M063C110A
	3.3	5	11	39	GS3R3M063C110A
	4.7	5	11	50	GS4R7M063C110A
	10	5	11	77	GS100M063C110A
	22	6.3	11	127	GS220M063E110A
	33	6.3	11	149	GS330M063E110A
	33	8	11.5	160	GS330M063F115A
	47	6.3	11	198	GS470M063E110A
	47	8	11.5	209	GS470M063F115A
	68	8	11.5	253	GS680M063F115A
	100	10	12.5	330	GS101M063G125A
	120	10	16	396	GS121M063G160A
	150	10	16	462	GS151M063G160A
	180	10	16	528	GS181M063G160A
	220	10	16	550	GS221M063G160A
	220	10	20	583	GS221M063G200A
	330	10	20	759	GS331M063G200A
	330	13	20	781	GS331M063I200A
	470	13	20	968	GS471M063I200A
	470	13	25	1023	GS471M063I250A
	560	13	25	1056	GS561M063I250A
	560	16	25	1089	GS561M063J250A
	680	16	25	1265	GS681M063J250A
	820	16	25	1430	GS821M063J250A
	1000	16	25	1540	GS102M063J250A
	1000	16	31.5	1705	GS102M063J315A
	1200	16	31.5	1837	GS122M063J315A
	1500	16	35.5	2090	GS152M063J355A
	1800	16	35.5	2255	GS182M063J355A
	2200	18	35.5	2475	GS222M063K355A
	2200	18	40	2750	GS222M063K400A
	2700	22	40	2860	GS272M063M400A
	3300	22	40	3080	GS332M063M400A
100	0.1	5	11	4.5	GS0R1M100C110A
	0.22	5	11	6	GSR22M100C110A
	0.33	5	11	10	GSR33M100C110A
	0.47	5	11	14	GSR47M100C110A
	1	5	11	27	GS010M100C110A
	2.2	5	11	40	GS2R2M100C110A
	3.3	5	11	48	GS3R3M100C110A
	4.7	5	11	58	GS4R7M100C110A
	10	5	11	85	GS100M100C110A
	10	6.3	11	92	GS100M100E110A

See "PACKAGING INFORMATION" to taped or formed products.

STANDARD RATINGS

Part number shows bulk version with straight leads

V_R (V)	C_R (µF)	ø D (mm)	L (mm)	I_R ▪ Max. Ripple Current +85°C ▪ 120Hz (mA rms)	CapXon Part Number
100	22	6.3	11	157	GS220M100E110A
	22	8	11.5	164	GS220M100F115A
	33	8	11.5	206	GS330M100F115A
	33	10	12.5	218	GS330M100G125A
	47	10	12.5	278	GS470M100G125A
	47	10	16	303	GS470M100G160A
	68	10	16	387	GS680M100G160A
	100	10	20	472	GS101M100G200A
	120	10	20	532	GS121M100G200A
	150	13	20	629	GS151M100I200A
	180	13	20	667	GS181M100I200A
	220	13	25	740	GS221M100I250A
	220	16	25	872	GS221M100J250A
	330	13	25	920	GS331M100I250A
	330	16	25	1040	GS331M100J250A
	470	16	25	1210	GS471M100J250A
	470	16	31.5	1330	GS471M100J315A
	560	16	35.5	1465	GS561M100J355A
	680	16	35.5	1634	GS681M100J355A
	820	18	35.5	1815	GS821M100K355A
	1000	18	40	1940	GS102M100K400A
160	0.47	5	11	12	GSR47M160C110A
	1	5	11	17	GS010M160C110A
	2.2	6.3	11	30	GS2R2M160E110A
	3.3	6.3	11	36	GS3R3M160E110A
	4.7	6.3	11	40	GS4R7M160E110A
	4.7	8	11.5	48	GS4R7M160F115A
	10	8	11.5	80	GS100M160F115A
	22	10	12.5	135	GS220M160G125A
	33	10	16	180	GS330M160G160A
	47	10	20	230	GS470M160G200A
	68	13	20	360	GS680M160I200A
	100	13	25	430	GS101M160I250A
	120	16	25	530	GS121M160J250A
	150	16	25	560	GS151M160J250A
	180	16	31.5	650	GS181M160J315A
	220	16	31.5	850	GS221M160J315A
	220	16	35.5	890	GS221M160J355A
	330	18	31.5	890	GS331M160K315A
	330	18	35.5	920	GS331M160K355A
	470	18	35.5	1180	GS471M160K355A
	470	18	40	1250	GS471M160K400A
	560	18	45	1320	GS561M160K450A

See "PACKAGING INFORMATION" to taped or formed products.

For further information please contact sales@capxon.org

STANDARD RATINGS

Part number shows bulk version with straight leads

V_R (V)	C_R (µF)	ø D (mm)	L (mm)	I_R ▪ Max. Ripple Current +85°C ▪ 120Hz (mA rms)	CapXon Part Number
200	0.47	5	11	12	GSR47M200C110A
	1	6.3	11	17	GS010M200E110A
	2.2	6.3	11	30	GS2R2M200E110A
	3.3	6.3	11	36	GS3R3M200E110A
	4.7	8	11.5	51	GS4R7M200F115A
	10	10	12.5	83	GS100M200G125A
	10	10	16	88	GS100M200G160A
	22	10	20	135	GS220M200G200A
	33	13	20	205	GS330M200I200A
	47	13	20	250	GS470M200I200A
	47	13	25	280	GS470M200I250A
	68	13	25	370	GS680M200I250A
	100	16	25	460	GS101M200J250A
	120	16	25	550	GS121M200J250A
	150	16	31.5	580	GS151M200J315A
	180	16	31.5	660	GS181M200J315A
	220	18	31.5	750	GS221M200K315A
	220	18	35.5	800	GS221M200K355A
	330	18	35.5	940	GS331M200K355A
	330	18	40	1000	GS331M200K400A
	470	18	40	1330	GS471M200K400A
250	0.47	5	11	12	GSR47M250C110A
	1	6.3	11	17	GS010M250E110A
	2.2	6.3	11	20	GS2R2M250E110A
	2.2	8	11.5	33	GS2R2M250F115A
	3.3	8	11.5	38	GS3R3M250F115A
	3.3	10	12.5	43	GS3R3M250G125A
	4.7	8	11.5	48	GS4R7M250F115A
	4.7	10	12.5	51	GS4R7M250G125A
	10	10	12.5	90	GS100M250G125A
	22	10	20	135	GS220M250G200A
	22	13	20	165	GS220M250I200A
	33	13	20	210	GS330M250I200A
	33	13	25	220	GS330M250I250A
	47	13	20	240	GS470M250I200A
	47	13	25	260	GS470M250I250A
	68	13	25	340	GS680M250I250A
	68	16	25	390	GS680M250J250A
	100	16	25	410	GS101M250J250A
	100	16	31.5	450	GS101M250J315A
	120	16	31.5	560	GS121M250J315A
	150	18	31.5	600	GS151M250K315A
	180	18	31.5	680	GS181M250K315A

See "PACKAGING INFORMATION" to taped or formed products.

STANDARD RATINGS

Part number shows bulk version with straight leads

V_R (V)	C_R (µF)	ø D (mm)	L (mm)	I_R ▪ Max. Ripple Current +85°C ▪ 120Hz (mA rms)	CapXon Part Number
350	0.47	6.3	11	15	GSR47M350E110A
	1	6.3	11	22	GS010M350E110A
	2.2	8	11.5	30	GS2R2M350F115A
	2.2	10	12.5	32	GS2R2M350G125A
	3.3	8	11.5	46	GS3R3M350F115A
	3.3	10	12.5	51	GS3R3M350G125A
	4.7	8	11.5	55	GS4R7M350F115A
	4.7	10	12.5	63	GS4R7M350G125A
	4.7	10	16	66	GS4R7M350G160A
	10	10	16	115	GS100M350G160A
	10	10	20	125	GS100M350G200A
	22	13	20	180	GS220M350I200A
	33	13	20	225	GS330M350I200A
	33	13	25	250	GS330M350I250A
	47	16	25	290	GS470M350J250A
	68	16	31.5	400	GS680M350J315A
	100	18	31.5	430	GS101M350K315A
	120	18	35.5	550	GS121M350K355A
	150	18	40	570	GS151M350K400A
400	0.47	6.3	11	12	GSR47M400E110A
	0.47	8	11.5	12	GSR47M400F115A
	1	6.3	11	20	GS010M400E110A
	1	8	11.5	22	GS010M400F115A
	2.2	8	11.5	32	GS2R2M400F115A
	2.2	10	12.5	35	GS2R2M400G125A
	3.3	8	11.5	45	GS3R3M400F115A
	3.3	10	12.5	53	GS3R3M400G125A
	4.7	8	11.5	55	GS4R7M400F115A
	4.7	10	12.5	66	GS4R7M400G125A
	4.7	10	16	70	GS4R7M400G160A
	10	10	16	100	GS100M400G160A
	10	10	20	115	GS100M400G200A
	10	13	20	120	GS100M400I200A
	22	13	20	190	GS220M400I200A
	22	13	25	200	GS220M400I250A
	33	13	25	230	GS330M400I250A
	33	16	25	250	GS330M400J250A
	47	16	25	270	GS470M400J250A
	47	16	31.5	290	GS470M400J315A
	68	16	35.5	410	GS680M400J355A
	68	18	25	380	GS680M400K250A
	68	18	31.5	420	GS680M400K315A
	100	18	31.5	440	GS101M400K315A
	100	18	35.5	450	GS101M400K355A
	120	18	40	520	GS121M400K400A

See "PACKAGING INFORMATION" to taped or formed products.

STANDARD RATINGS

Part number shows bulk version with straight leads

V_R (V)	C_R (µF)	ø D (mm)	L (mm)	I_R ▪ Max. Ripple Current +85°C ▪ 120Hz (mA rms)	CapXon Part Number
450	0.47	6.3	11	12	GSR47M450E110A
	1	8	11.5	22	GS010M450F115A
	2.2	8	11.5	32	GS2R2M450F115A
	2.2	10	12.5	35	GS2R2M450G125A
	3.3	8	11.5	35	GS3R3M450F115A
	3.3	10	12.5	37	GS3R3M450G125A
	3.3	10	16	40	GS3R3M450G160A
	4.7	10	12.5	50	GS4R7M450G125A
	4.7	10	16	56	GS4R7M450G160A
	10	10	20	90	GS100M450G200A
	10	13	20	105	GS100M450I200A
	10	13	25	110	GS100M450I250A
	22	13	20	140	GS220M450I200A
	22	13	25	150	GS220M450I250A
	22	16	25	165	GS220M450J250A
	33	16	25	190	GS330M450J250A
	33	16	31.5	210	GS330M450J315A
	47	16	31.5	260	GS470M450J315A
	47	16	35.5	280	GS470M450J355A
	68	18	31.5	370	GS680M450K315A
	68	18	35.5	390	GS680M450K355A
	100	18	40	420	GS101M450K400A
	120	18	45	510	GS121M450K450A

See "PACKAGING INFORMATION" to taped or formed products.

DIMENSIONS ▪ All dimensions in mm

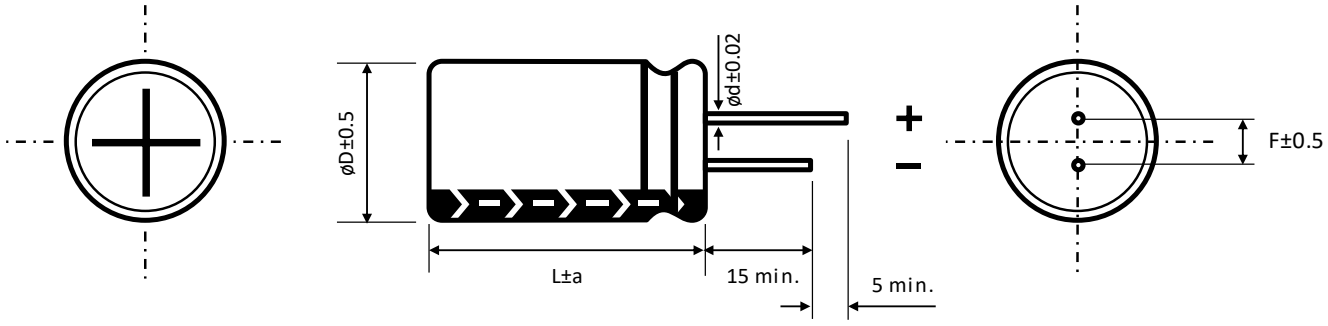

ø D	5	6.3	8		10	13	16	18	22
F	2	2.5	3.5		5	5	7.5	7.5	10
ø d	0.5		L < 20	L ≥ 20	0.6		0.8		
			0.5	0.6					

a	ø D < 16	ø D = 16		ø D = 18		ø D > 18
	1.5	L = 25 to 35.5	L < 25 and L ≥ 40	L = 25 to 31.5	L < 25 and L ≥ 35.5	2
		1.5	2	1.5	2	

For further information please contact sales@capxon.org

MULTIPLIER K_f for RIPPLE CURRENT vs. FREQUENCY

C_R (µF) / Frequency (Hz)	50/60	100/120	400	1k	10k	50k - 100k
$C_R \leq 10$	0.8	1	1.3	1.45	1.65	1.7
$10 < C_R \leq 100$	0.8	1	1.23	1.36	1.48	1.53
$100 < C_R \leq 1000$	0.8	1	1.16	1.25	1.35	1.38
$1000 \leq C_R$	0.8	1	1.11	1.17	1.25	1.28

PRECAUTIONS, GUIDELINES AND PACKAGING INFORMATON

Unless otherwise agreed in individual specifications, all products are subject to our “General Precautions and Guidelines” as well as our “Packaging Information”. Please refer to the following links in the table.

General Precautions and Guidelines	Packaging Information Liquid Radial
Page 837	Page 336

DISCLAIMER

All product related data (e.g. specification, statements and general information) are subject to change without any notice. It is necessary that the customer observes all product related technical / application information and handling instructions.

CapXon products are designed and manufactured according to severe quality and safety standards. Under no circumstance, CapXon warrants that any CapXon product is suitable for the purposes intended for your application, even CapXon knows the application. It is customer's duty and obligation to check and make sure that CapXon products are suitable for the purposes intended and select the correct and proper CapXon product. Customers are requested to perform a sufficient validation and reliability evaluation to assure needed safety level and reliability performance by suitable designs and to apply proper safeguards (e.g. redundancies, protective circuits).

Particular operating conditions (ambient temperature, ripple current, voltage, thermal resistance, etc.) as well as storage, production or assembly may affect the performance and the lifetime of the capacitor. Please consult CapXon for lifetime estimation, failure mode considerations or worst-case scenarios according to the product technology, product tolerances / deviations or change of the characteristics of the capacitor due to shipment, storage, handling, production and usage.

For aerospace or military application, life-saving, life-sustaining, safety critical applications or any application where failure may cause severe personal injury or death, please consult us before design-in the capacitor in your application.

Except for the written expressed warranties, CapXon does not impliedly, by assumption or whatever else, warrant, undertake, promise any other warranty or guaranty for any CapXon product.

For further information, please visit our website www.capxongroup.com or contact CapXon directly.

NP SERIES ▪ BI-POLAR 85°C TYPE



KEY FEATURES

BI-POLAR

- **ALUMINUM ELECTROLYTIC CAPACITOR** ▪ THT type
- Endurance: 85°C ▪ 2000 hours
- Bi-Polar, Non-polarized type
- Excellent frequency characteristics
- Minimal capacitance deviation

HF Halogen Free

RoHS & REACH COMPLIANT

SPECIFICATIONS

Items		Performance Characteristics						
Operating Temperature Range		-40 ~ +85°C				-25 ~ +85°C		
Rated Voltage Range	V_R	6.3 ~ 100V DC				160 ~ 250V DC		
Surge Voltage	V_S	$V_S = 1.15 \cdot V_R$						
Capacitance Range	C_R	0.47 ~ 3300µF				0.47 ~ 47µF		
Cap. Tolerance	ΔC	±20% (120Hz ▪ 20°C)						
Leakage Current (20°C ▪ V_R applied)	I_{LEAK}	≤ $0.03 \cdot C_R \cdot V_R$ or 3µA, whichever is greater ▪ After 2 minutes [I_{LEAK} (µA) ; C_R (µF) ; V_R (V)]						
Dissipation Factor % (20°C ▪ 120Hz)	tanδ	V_R (V DC)	6.3	10	16	25	35	50
		tanδ (%)	25	25	20	15	15	13
		V_R (V DC)	63	100	160	200	250	
		tanδ (%)	10	10	15	15	20	
		For C_R ≥ 1000µF, add 2% per every multiple 1000µF of rated capacitance value						
Low Temperature Characteristics at 120Hz	Z ratio max.	V_R (V DC)	6.3	10	16	25	35	50
		Z-25°C/Z+20°C	4	3	2	2	2	2
		Z-40°C/Z+20°C	8	6	4	3	3	3
		V_R (V DC)	63	100	160	200	250	
		Z-25°C/Z+20°C	2	2	2	2	3	
		Z-40°C/Z+20°C	3	3	-	-	-	
		For capacitance > 1000µF						
		Z-25°C/Z+20°C	Add 0.5 for every multiple 1000µF of rated capacitance value					
		Z-40°C/Z+20°C	Add 1 for every multiple 1000µF of rated capacitance value					

Lifetime Test		
Endurance 85°C (V_R applied)	Test	**2000 hours**
	ΔC/C_R	≤ ±20% of initial measured value
	tanδ	≤ 150% of initial specified value
	I_{Leak}	≤ the initial specified value
Shelf Life 85°C (V_R = 0)	Test	**1000 hours**
	ΔC/C_R	≤ ±20% of initial measured value
	tanδ	≤ 150% of initial specified value
	I_{Leak}	≤ the initial specified value
	Before measurement: Restore capacitor to 20°C, apply V_R for 30 min according JIS-C-5101-4	

For further information please contact sales@capxon.org

STANDARD RATINGS

Part number shows bulk version with straight leads

V_R (V)	C_R (µF)	ø D (mm)	L (mm)	I_R ▪ Max. Ripple Current +85°C ▪ 120Hz (mA rms)	CapXon Part Number
6.3	100	6.3	11	120	NP101M6R3E110A
	220	6.3	11	175	NP221M6R3E110A
	330	8	11.5	250	NP331M6R3F115A
	470	10	12.5	330	NP471M6R3G125A
	1000	10	20	650	NP102M6R3G200A
	2200	13	20	850	NP222M6R3I200A
	3300	16	25	970	NP332M6R3J250A
10	22	5	11	55	NP220M010C110A
	33	5	11	66	NP330M010C110A
	47	5	11	82	NP470M010C110A
	100	6.3	11	125	NP101M010E110A
	220	8	11.5	205	NP221M010F115A
	330	10	12.5	270	NP331M010G125A
	330	10	16	300	NP331M010G160A
	470	10	16	388	NP471M010G160A
	1000	13	20	700	NP102M010I200A
	2200	16	25	1000	NP222M010J250A
	3300	18	35.5	1300	NP332M010K355A
16	22	5	11	57	NP220M016C110A
	33	5	11	75	NP330M016C110A
	47	6.3	11	97	NP470M016E110A
	100	8	11.5	162	NP101M016F115A
	220	10	12.5	270	NP221M016G125A
	330	10	16	350	NP331M016G160A
	470	10	20	455	NP471M016G200A
	1000	13	20	730	NP102M016I200A
	1000	13	25	800	NP102M016I250A
	2200	16	31.5	1100	NP222M016J315A
25	10	5	11	34	NP100M025C110A
	22	6.3	11	65	NP220M025E110A
	33	6.3	11	86	NP330M025E110A
	47	6.3	11	100	NP470M025E110A
	100	8	11.5	175	NP101M025F115A
	220	10	12.5	295	NP221M025G125A
	220	10	16	310	NP221M025G160A
	330	10	20	440	NP331M025G200A
	470	13	20	530	NP471M025I200A
35	10	5	11	43	NP100M035C110A
	22	6.3	11	75	NP220M035E110A
	33	8	11.5	105	NP330M035F115A
	47	8	11.5	120	NP470M035F115A
	100	10	12.5	210	NP101M035G125A
	100	10	16	230	NP101M035G160A
	220	10	20	400	NP221M035G200A

See "PACKAGING INFORMATION" to taped or formed products.

STANDARD RATINGS

Part number shows bulk version with straight leads

V_R (V)	C_R (µF)	ø D (mm)	L (mm)	I_R ▪ Max. Ripple Current +85°C ▪ 120Hz (mA rms)	CapXon Part Number
35	330	13	20	495	NP331M035I200A
	470	13	25	655	NP471M035I250A
50	0.47	5	11	11	NPR47M050C110A
	1	5	11	17	NP010M050C110A
	2.2	5	11	25	NP2R2M050C110A
	3.3	5	11	27	NP3R3M050C110A
	4.7	5	11	34	NP4R7M050C110A
	10	6.3	11	52	NP100M050E110A
	22	8	11.5	92	NP220M050F115A
	33	8	11.5	109	NP330M050F115A
	47	10	12.5	150	NP470M050G125A
	100	10	20	265	NP101M050G200A
	220	13	20	475	NP221M050I200A
	330	13	25	560	NP331M050I250A
63	0.47	5	11	12	NPR47M063C110A
	1	5	11	18	NP010M063C110A
	2.2	5	11	26	NP2R2M063C110A
	3.3	6.3	11	28	NP3R3M063E110A
	4.7	6.3	11	34	NP4R7M063E110A
	10	6.3	11	57	NP100M063E110A
	22	8	11.5	97	NP220M063F115A
	33	10	12.5	140	NP330M063G125A
	47	10	16	180	NP470M063G160A
	100	13	20	320	NP101M063I200A
	220	13	25	510	NP221M063I250A
100	0.47	5	11	14	NPR47M100C110A
	1	5	11	21	NP010M100C110A
	2.2	5	11	34	NP2R2M100C110A
	3.3	6.3	11	39	NP3R3M100E110A
	4.7	8	11.5	47	NP4R7M100F115A
	10	8	11.5	71	NP100M100F115A
	22	10	16	140	NP220M100G160A
	33	10	16	190	NP330M100G160A
	33	10	20	220	NP330M100G200A
	47	10	20	195	NP470M100G200A
	47	13	20	240	NP470M100I200A
	100	16	25	425	NP101M100J250A
	220	16	25	520	NP221M100J250A
	220	16	31.5	550	NP221M100J315A
160	0.47	5	11	17	NPR47M160C110A
	1	6.3	11	25	NP010M160E110A
	2.2	8	11.5	38	NP2R2M160F115A
	3.3	8	11.5	43	NP3R3M160F115A
	4.7	10	12.5	52	NP4R7M160G125A

See "PACKAGING INFORMATION" to taped or formed products.

STANDARD RATINGS

Part number shows bulk version with straight leads

V_R (V)	C_R (µF)	ø D (mm)	L (mm)	I_R ▪ Max. Ripple Current +85°C ▪ 120Hz (mA rms)	CapXon Part Number
160	10	10	16	89	NP100M160G160A
	22	13	20	155	NP220M160I200A
	33	13	20	230	NP330M160I200A
	47	13	25	250	NP470M160I250A
200	0.47	6.3	11	21	NPR47M200E110A
	1	8	11.5	28	NP010M200F115A
	2.2	8	11.5	42	NP2R2M200F115A
	3.3	10	12.5	46	NP3R3M200G125A
	4.7	10	16	56	NP4R7M200G160A
	10	10	20	95	NP100M200G200A
	22	13	20	180	NP220M200I200A
	33	13	25	250	NP330M200I250A
250	0.47	6.3	11	28	NPR47M250E110A
	1	8	11.5	32	NP010M250F115A
	2.2	10	12.5	48	NP2R2M250G125A
	3.3	10	16	57	NP3R3M250G160A
	4.7	10	20	88	NP4R7M250G200A
	10	10	20	130	NP100M250G200A
	22	13	25	224	NP220M250I250A
	33	16	25	305	NP330M250J250A
	33	16	25	305	NP330M250J250A

See "PACKAGING INFORMATION" to taped or formed products.

DIMENSIONS ▪ All dimensions in mm

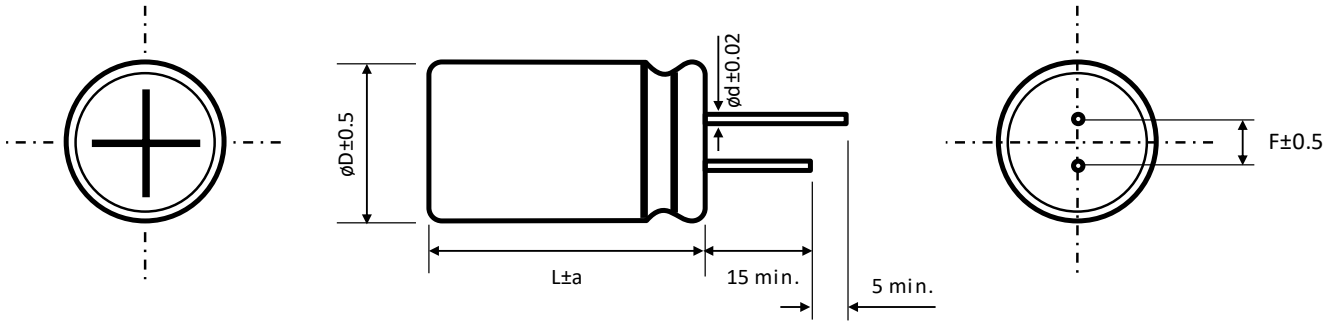

ø D	5	6.3	8		10	13	16	18
F	2	2.5	3.5		5	5	7.5	7.5
ø d	0.5		L < 20	L ≥ 20	0.6		0.8	
			0.5	0.6				

a	ø D < 16	ø D = 16		ø D = 18	
	1.5	L = 25 to 35.5	L < 25 and L ≥ 40	L = 25 to 31.5	L < 25 and L ≥ 35.5
		1.5	2	1.5	2

For further information please contact sales@capxon.org

MULTIPLIER K_f for RIPPLE CURRENT vs. FREQUENCY

C_R (µF) / Frequency (Hz)	50/60	100/120	400	1k	10k	50k - 100k
$C_R \leq 10$	0.8	1	1.3	1.45	1.65	1.7
$10 < C_R \leq 100$	0.8	1	1.23	1.36	1.48	1.53
$100 < C_R \leq 1000$	0.8	1	1.16	1.25	1.35	1.38
$1000 \leq C_R$	0.8	1	1.11	1.17	1.25	1.28

PRECAUTIONS, GUIDELINES AND PACKAGING INFORMATON

Unless otherwise agreed in individual specifications, all products are subject to our “General Precautions and Guidelines” as well as our “Packaging Information”. Please refer to the following links in the table.

General Precautions and Guidelines	Packaging Information Liquid Radial
Page 837	Page 336

DISCLAIMER

All product related data (e.g. specification, statements and general information) are subject to change without any notice. It is necessary that the customer observes all product related technical / application information and handling instructions.

CapXon products are designed and manufactured according to severe quality and safety standards. Under no circumstance, CapXon warrants that any CapXon product is suitable for the purposes intended for your application, even CapXon knows the application. It is customer's duty and obligation to check and make sure that CapXon products are suitable for the purposes intended and select the correct and proper CapXon product. Customers are requested to perform a sufficient validation and reliability evaluation to assure needed safety level and reliability performance by suitable designs and to apply proper safeguards (e.g. redundancies, protective circuits).

Particular operating conditions (ambient temperature, ripple current, voltage, thermal resistance, etc.) as well as storage, production or assembly may affect the performance and the lifetime of the capacitor. Please consult CapXon for lifetime estimation, failure mode considerations or worst-case scenarios according to the product technology, product tolerances / deviations or change of the characteristics of the capacitor due to shipment, storage, handling, production and usage.

For aerospace or military application, life-saving, life-sustaining, safety critical applications or any application where failure may cause severe personal injury or death, please consult us before design-in the capacitor in your application.

Except for the written expressed warranties, CapXon does not impliedly, by assumption or whatever else, warrant, undertake, promise any other warranty or guaranty for any CapXon product.

For further information, please visit our website www.capxongroup.com or contact CapXon directly.

ST SERIES ▪ 5MM HEIGHT, STANDARD 105°C TYPE



KEY FEATURES

LOW HEIGHT

- **ALUMINUM ELECTROLYTIC CAPACITOR** ▪ THT type
- Endurance: 105°C ▪ 1000 hours
- Optimized for high density insertion
- Low height ▪ 5mm
- Miniaturized for space critical applications

SPECIFICATIONS

Items		Performance Characteristics							
Operating Temperature Range		-40 ~ +105°C							
Rated Voltage Range	V_R	4 ~ 50V DC							
Surge Voltage	V_S	$V_S = 1.15 \cdot V_R$							
Capacitance Range	C_R	0.1 ~ 220µF							
Cap. Tolerance	ΔC	±20% (120Hz ▪ 20°C)							
Leakage Current (20°C ▪ V_R applied)	I_{LEAK}	≤ $0.01 \cdot C_R \cdot V_R$ or 3µA, whichever is greater ▪ After 2 minutes [I_{LEAK} (µA) ; C_R (µF) ; V_R (V)]							
Dissipation Factor % (20°C ▪ 120Hz)	tanδ	V_R (V DC)	4	6.3	10	16	25	35	50
		tanδ (%)	35	24	20	16	14	12	10
Low Temperature Characteristics at 120Hz	Z ratio max.	V_R (V DC)	4	6.3	10	16	25	35	50
		Z-25°C/Z+20°C	6	3	3	2	2	2	2
		Z-40°C/Z+20°C	12	8	5	4	3	3	3

Lifetime Test			
Endurance 105°C (V_R applied)	Test	**1000 hours**	
	△C/C_R	≤ ±20% of initial measured value	6.3 ~ 50 V
		≤ ±30% of initial measured value	4V
	tanδ	≤ 200% of initial specified value	
	I_{Leak}	≤ the initial specified value	
Shelf Life 105°C (V_R = 0)	Test	**1000 hours**	
	△C/C_R	≤ ±20% of initial measured value	6.3 ~ 50 V
		≤ ±30% of initial measured value	4V
	tanδ	≤ 200% of initial specified value	
	I_{Leak}	≤ the initial specified value	
	Before measurement: Restore capacitor to 20°C, apply V_R for 30 min according JIS-C-5101-4		

MULTIPLIER K_f for RIPPLE CURRENT vs. FREQUENCY

C_R (µF) / Frequency (Hz)	50/60	100/120	1k	≥ 10k
0.1 ~ 68	0.8	1	1.3	1.5
100 ~ 220	0.8	1	1.15	1.2

For further information please contact sales@capxon.org

STANDARD RATINGS

Part number shows bulk version with straight leads

V_R (V)	C_R (µF)	ø D (mm)	L (mm)	I_R ▪ Max. Ripple Current +105°C ▪ 120Hz (mA rms)	CapXon Part Number
4	10	4	5	10	ST100M004B050A
	15	4	5	13	ST150M004B050A
	22	4	5	22	ST220M004B050A
	33	5	5	30	ST330M004C050A
	47	5	5	36	ST470M004C050A
	68	6.3	5	52	ST680M004E050A
	100	6.3	5	60	ST101M004E050A
	220	6.3	5	80	ST221M004E050A
6.3	10	4	5	12	ST100M6R3B050A
	15	4	5	15	ST150M6R3B050A
	22	4	5	22	ST220M6R3B050A
	33	5	5	30	ST330M6R3C050A
	47	5	5	36	ST470M6R3C050A
	68	6.3	5	52	ST680M6R3E050A
	100	6.3	5	60	ST101M6R3E050A
	220	6.3	5	80	ST221M6R3E050A
10	6.8	4	5	11	ST6R8M010B050A
	10	4	5	15	ST100M010B050A
	15	4	5	18	ST150M010B050A
	22	5	5	27	ST220M010C050A
	33	5	5	35	ST330M010C050A
	47	6.3	5	48	ST470M010E050A
	68	6.3	5	53	ST680M010E050A
	100	8	5	65	ST101M010F050A
	220	8	5	83	ST221M010F050A
16	4.7	4	5	9	ST4R7M016B050A
	6.8	4	5	13	ST6R8M016B050A
	10	4	5	18	ST100M016B050A
	15	5	5	23	ST150M016C050A
	22	5	5	30	ST220M016C050A
	33	6.3	5	45	ST330M016E050A
	47	6.3	5	50	ST470M016E050A
	68	8	5	55	ST680M016F050A
	100	8	5	68	ST101M016F050A
25	3.3	4	5	8.5	ST3R3M025B050A
	4.7	4	5	13	ST4R7M025B050A
	6.8	4	5	15	ST6R8M025B050A
	10	5	5	23	ST100M025C050A
	15	6.3	5	32	ST150M025E050A
	22	6.3	5	39	ST220M025E050A
	33	6.3	5	48	ST330M025E050A
	47	6.3	5	50	ST470M025E050A
	47	8	5	55	ST470M025F050A

See "PACKAGING INFORMATION" to taped or formed products.

STANDARD RATINGS

Part number shows bulk version with straight leads

V_R (V)	C_R (µF)	ø D (mm)	L (mm)	I_R ▪ Max. Ripple Current +105°C ▪ 120Hz (mA rms)	CapXon Part Number
35	2.2	4	5	7.5	ST2R2M035B050A
	3.3	4	5	11	ST3R3M035B050A
	4.7	4	5	15	ST4R7M035B050A
	6.8	5	5	19	ST6R8M035C050A
	10	5	5	25	ST100M035C050A
	15	6.3	5	32	ST150M035E050A
	22	6.3	5	48	ST220M035E050A
	33	8	5	50	ST330M035F050A
50	0.1	4	5	1.5	ST0R1M050B050A
	0.15	4	5	2	STR15M050B050A
	0.22	4	5	2.6	STR22M050B050A
	0.33	4	5	3.2	STR33M050B050A
	0.47	4	5	3.8	STR47M050B050A
	0.68	4	5	5	STR68M050B050A
	1	4	5	6.2	ST010M050B050A
	1.5	4	5	7	ST1R5M050B050A
	2.2	4	5	11	ST2R2M050B050A
	3.3	4	5	14	ST3R3M050B050A
	4.7	5	5	19	ST4R7M050C050A
	6.8	5	5	22	ST6R8M050C050A
	6.8	6.3	5	25	ST6R8M050E050A
	10	6.3	5	30	ST100M050E050A
	15	8	5	35	ST150M050F050A
	22	8	5	50	ST220M050F050A

See "PACKAGING INFORMATION" to taped or formed products.

DIMENSIONS ▪ All dimensions in mm

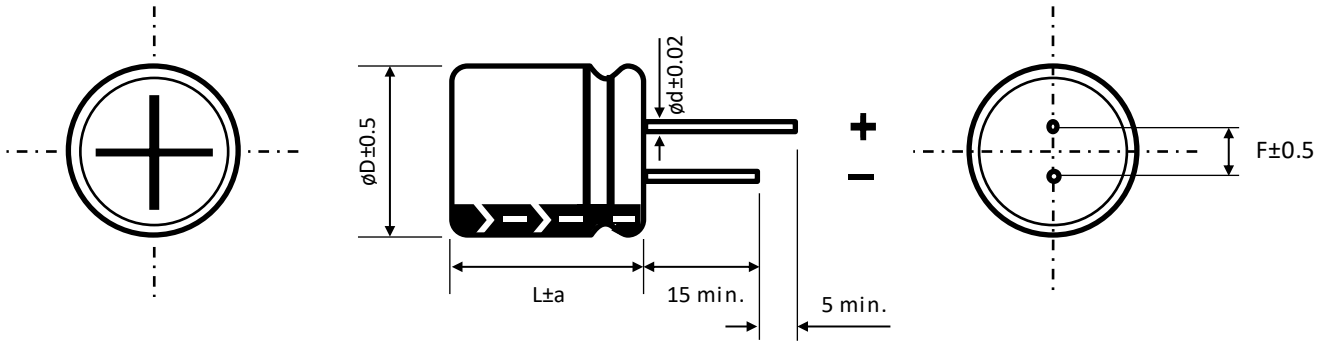

ø D	4	5	6.3	8
F	1.5	2	2.5	3.5
ø d	0.45	0.45	0.45	0.45
a	1	1	1	1

For further information please contact sales@capxon.org

PRECAUTIONS, GUIDELINES AND PACKAGING INFORMATON

Unless otherwise agreed in individual specifications, all products are subject to our “General Precautions and Guidelines” as well as our “Packaging Information”. Please refer to the following links in the table.

General Precautions and Guidelines	Packaging Information Liquid Radial
Page 837	Page 336

DISCLAIMER

All product related data (e.g. specification, statements and general information) are subject to change without any notice. It is necessary that the customer observes all product related technical / application information and handling instructions.

CapXon products are designed and manufactured according to severe quality and safety standards. Under no circumstance, CapXon warrants that any CapXon product is suitable for the purposes intended for your application, even CapXon knows the application. It is customer's duty and obligation to check and make sure that CapXon products are suitable for the purposes intended and select the correct and proper CapXon product. Customers are requested to perform a sufficient validation and reliability evaluation to assure needed safety level and reliability performance by suitable designs and to apply proper safeguards (e.g. redundancies, protective circuits).

Particular operating conditions (ambient temperature, ripple current, voltage, thermal resistance, etc.) as well as storage, production or assembly may affect the performance and the lifetime of the capacitor. Please consult CapXon for lifetime estimation, failure mode considerations or worst-case scenarios according to the product technology, product tolerances / deviations or change of the characteristics of the capacitor due to shipment, storage, handling, production and usage.

For aerospace or military application, life-saving, life-sustaining, safety critical applications or any application where failure may cause severe personal injury or death, please consult us before design-in the capacitor in your application.

Except for the written expressed warranties, CapXon does not impliedly, by assumption or whatever else, warrant, undertake, promise any other warranty or guaranty for any CapXon product.

For further information, please visit our website www.capxongroup.com or contact CapXon directly.

SK SERIES ▪ 7MM HEIGHT, STANDARD 105°C TYPE



KEY FEATURES

LOW HEIGHT

- **ALUMINUM ELECTROLYTIC CAPACITOR** ▪ THT type
- Endurance: 105°C ▪ 1000 hours
- Optimized for high density insertion
- Low height ▪ 7mm
- Miniaturized for space critical applications

SPECIFICATIONS

Items		Performance Characteristics								
Operating Temperature Range		-40 ~ +105°C								
Rated Voltage Range	V_R	4 ~ 63V DC								
Surge Voltage	V_S	$V_S = 1.15 \cdot V_R$								
Capacitance Range	C_R	0.1 ~ 470µF								
Cap. Tolerance	ΔC	±20% (120Hz ▪ 20°C)								
Leakage Current (20°C ▪ V_R applied)	I_{LEAK}	≤ $0.01 \cdot C_R \cdot V_R$ or 3µA, whichever is greater ▪ After 2 minutes [I_{LEAK} (µA) ; C_R (µF) ; V_R (V)]								
Dissipation Factor % (20°C ▪ 120Hz)	tanδ	V_R (V DC)	4	6.3	10	16	25	35	50	63
		tanδ (%)	25	22	20	16	14	12	10	9
Low Temperature Characteristics at 120Hz	Z ratio max.	V_R (V DC)	4	6.3	10	16	25	35	50	63
		Z-25°C/Z+20°C	7	4	3	2	2	2	2	2
		Z-40°C/Z+20°C	15	8	6	4	4	3	3	3

Lifetime Test			
Endurance 105°C (V_R applied)	Test	**1000 hours**	
	△C/C_R	≤ ±20% of initial measured value	6.3 ~ 63 V
		≤ ±30% of initial measured value	4V
	tanδ	≤ 200% of initial specified value	
	I_{Leak}	≤ the initial specified value	
Shelf Life 105°C (V_R = 0)	Test	**1000 hours**	
	△C/C_R	≤ ±20% of initial measured value	6.3 ~ 63 V
		≤ ±30% of initial measured value	4V
	tanδ	≤ 200% of initial specified value	
	I_{Leak}	≤ the initial specified value	
	Before measurement: Restore capacitor to 20°C, apply V_R for 30 min according JIS-C-5101-4		

MULTIPLIER K_f for RIPPLE CURRENT vs. FREQUENCY

C_R (µF) / Frequency (Hz)	50/60	100/120	400	1k	10k	50k - 100k
$C_R \leq 10$	0.8	1	1.3	1.45	1.65	1.7
$10 < C_R \leq 100$	0.8	1	1.23	1.36	1.48	1.53
$100 < C_R \leq 470$	0.8	1	1.16	1.25	1.35	1.38

For further information please contact sales@capxon.org

STANDARD RATINGS

Part number shows bulk version with straight leads

V_R (V)	C_R (µF)	ø D (mm)	L (mm)	I_R ▪ Max. Ripple Current +105°C ▪ 120Hz (mA rms)	CapXon Part Number
4	22	4	7	23	SK220M004B070A
	33	4	7	26	SK330M004B070A
	47	4	7	35	SK470M004B070A
	68	5	7	55	SK680M004C070A
	100	5	7	58	SK101M004C070A
	220	6.3	7	65	SK221M004E070A
	330	6.3	7	90	SK331M004E070A
	470	8	7	120	SK471M004F070A
6.3	22	4	7	31	SK220M6R3B070A
	33	4	7	32	SK330M6R3B070A
	33	5	7	35	SK330M6R3C070A
	47	4	7	40	SK470M6R3B070A
	47	5	7	47	SK470M6R3C070A
	68	5	7	55	SK680M6R3C070A
	100	5	7	65	SK101M6R3C070A
	100	6.3	7	75	SK101M6R3E070A
	220	6.3	7	90	SK221M6R3E070A
	220	8	7	120	SK221M6R3F070A
	330	8	7	120	SK331M6R3F070A
10	15	4	7	28	SK150M010B070A
	22	4	7	35	SK220M010B070A
	33	4	7	40	SK330M010B070A
	33	5	7	45	SK330M010C070A
	47	4	7	47	SK470M010B070A
	47	5	7	51	SK470M010C070A
	68	5	7	60	SK680M010C070A
	68	6.3	7	68	SK680M010E070A
	100	5	7	80	SK101M010C070A
	100	6.3	7	90	SK101M010E070A
	220	6.3	7	105	SK221M010E070A
	220	8	7	150	SK221M010F070A
16	6.8	4	7	20	SK6R8M016B070A
	10	4	7	30	SK100M016B070A
	15	4	7	32	SK150M016B070A
	22	4	7	37	SK220M016B070A
	22	5	7	42	SK220M016C070A
	33	4	7	45	SK330M016B070A
	33	5	7	50	SK330M016C070A
	47	5	7	61	SK470M016C070A
	47	6.3	7	67	SK470M016E070A
	68	6.3	7	72	SK680M016E070A
	100	6.3	7	95	SK101M016E070A
	100	8	7	105	SK101M016F070A

See "PACKAGING INFORMATION" to taped or formed products.

STANDARD RATINGS

Part number shows bulk version with straight leads

V_R (V)	C_R (µF)	ø D (mm)	L (mm)	I_R ▪ Max. Ripple Current +105°C ▪ 120Hz (mA rms)	CapXon Part Number
25	4.7	4	7	17	SK4R7M025B070A
	6.8	4	7	21	SK6R8M025B070A
	10	4	7	30	SK100M025B070A
	10	5	7	33	SK100M025C070A
	15	5	7	38	SK150M025C070A
	22	5	7	45	SK220M025C070A
	22	6.3	7	48	SK220M025E070A
	33	5	7	52	SK330M025C070A
	33	6.3	7	60	SK330M025E070A
	47	6.3	7	68	SK470M025E070A
	47	8	7	72	SK470M025F070A
	68	6.3	7	75	SK680M025E070A
	100	8	7	115	SK101M025F070A
35	4.7	4	7	22	SK4R7M035B070A
	6.8	4	7	24	SK6R8M035B070A
	6.8	5	7	28	SK6R8M035C070A
	10	4	7	30	SK100M035B070A
	10	5	7	35	SK100M035C070A
	15	5	7	38	SK150M035C070A
	15	6.3	7	45	SK150M035E070A
	22	5	7	50	SK220M035C070A
	22	6.3	7	58	SK220M035E070A
	33	6.3	7	54	SK330M035E070A
	33	8	7	68	SK330M035F070A
	47	8	7	80	SK470M035F070A
	68	8	7	85	SK680M035F070A
50	0.1	4	7	1.5	SK0R1M050B070A
	0.15	4	7	1.8	SKR15M050B070A
	0.22	4	7	2.5	SKR22M050B070A
	0.33	4	7	3.5	SKR33M050B070A
	0.47	4	7	5	SKR47M050B070A
	0.68	4	7	7	SKR68M050B070A
	1	4	7	10	SK010M050B070A
	1.5	4	7	13	SK1R5M050B070A
	2.2	4	7	19	SK2R2M050B070A
	3.3	4	7	24	SK3R3M050B070A
	4.7	4	7	27	SK4R7M050B070A
	4.7	5	7	29	SK4R7M050C070A
	6.8	5	7	32	SK6R8M050C070A
	6.8	6.3	7	33	SK6R8M050E070A
	10	5	7	35	SK100M050C070A
	10	6.3	7	38	SK100M050E070A
	15	6.3	7	52	SK150M050E070A

See "PACKAGING INFORMATION" to taped or formed products.

For further information please contact sales@capxon.org

STANDARD RATINGS

Part number shows bulk version with straight leads

V_R (V)	C_R (µF)	ø D (mm)	L (mm)	I_R ▪ Max. Ripple Current +105°C ▪ 120Hz (mA rms)	CapXon Part Number
50	22	6.3	7	60	SK220M050E070A
	22	8	7	63	SK220M050F070A
	33	8	7	78	SK330M050F070A
63	0.1	4	7	1.5	SK0R1M063B070A
	0.15	4	7	1.8	SKR15M063B070A
	0.22	4	7	2.5	SKR22M063B070A
	0.33	4	7	3.5	SKR33M063B070A
	0.47	4	7	6	SKR47M063B070A
	0.68	4	7	7	SKR68M063B070A
	1	4	7	12	SK010M063B070A
	1.5	4	7	14	SK1R5M063B070A
	2.2	4	7	19	SK2R2M063B070A
	3.3	5	7	25	SK3R3M063C070A
	4.7	5	7	29	SK4R7M063C070A
	4.7	6.3	7	33	SK4R7M063E070A
	6.8	6.3	7	35	SK6R8M063E070A
	10	6.3	7	40	SK100M063E070A
	15	8	7	55	SK150M063F070A
	22	8	7	65	SK220M063F070A

See "PACKAGING INFORMATION" to taped or formed products.

DIMENSIONS ▪ All dimensions in mm

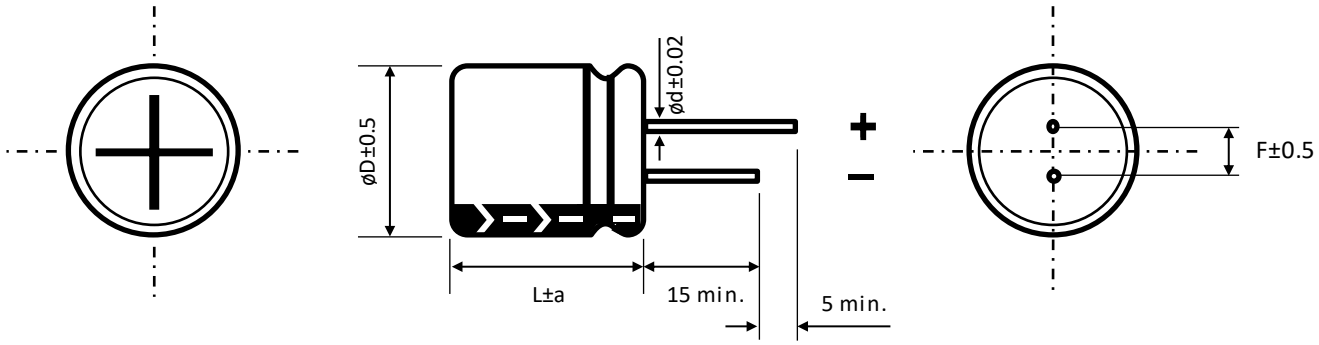

ø D	4	5	6.3	8
F	1.5	2	2.5	3.5
ø d	0.45	0.45	0.5	0.5
a	1	1	1	1

For further information please contact sales@capxon.org

PRECAUTIONS, GUIDELINES AND PACKAGING INFORMATON

Unless otherwise agreed in individual specifications, all products are subject to our “General Precautions and Guidelines” as well as our “Packaging Information”. Please refer to the following links in the table.

General Precautions and Guidelines	Packaging Information Liquid Radial
Page 837	Page 336

DISCLAIMER

All product related data (e.g. specification, statements and general information) are subject to change without any notice. It is necessary that the customer observes all product related technical / application information and handling instructions.

CapXon products are designed and manufactured according to severe quality and safety standards. Under no circumstance, CapXon warrants that any CapXon product is suitable for the purposes intended for your application, even CapXon knows the application. It is customer's duty and obligation to check and make sure that CapXon products are suitable for the purposes intended and select the correct and proper CapXon product. Customers are requested to perform a sufficient validation and reliability evaluation to assure needed safety level and reliability performance by suitable designs and to apply proper safeguards (e.g. redundancies, protective circuits).

Particular operating conditions (ambient temperature, ripple current, voltage, thermal resistance, etc.) as well as storage, production or assembly may affect the performance and the lifetime of the capacitor. Please consult CapXon for lifetime estimation, failure mode considerations or worst-case scenarios according to the product technology, product tolerances / deviations or change of the characteristics of the capacitor due to shipment, storage, handling, production and usage.

For aerospace or military application, life-saving, life-sustaining, safety critical applications or any application where failure may cause severe personal injury or death, please consult us before design-in the capacitor in your application.

Except for the written expressed warranties, CapXon does not impliedly, by assumption or whatever else, warrant, undertake, promise any other warranty or guaranty for any CapXon product.

For further information, please visit our website www.capxongroup.com or contact CapXon directly.

SZ SERIES ▪ 7/9MM HEIGHT, LOW IMPEDANCE, 105°C TYPE



KEY FEATURES

LOW IMPEDANCE LOW HEIGHT

- **ALUMINUM ELECTROLYTIC CAPACITOR** ▪ THT type
- Endurance: 105°C ▪ 1000 hours
- Miniaturized for space critical applications
- Low height ▪ 7 and 9mm
- Low impedance type

HF Halogen Free RoHS & REACH COMPLIANT

SPECIFICATIONS

Items		Performance Characteristics					
Operating Temperature Range		-55 ~ +105°C					
Rated Voltage Range	V_R	6.3 ~ 35V DC					
Surge Voltage	V_S	$V_S = 1.15 \cdot V_R$					
Capacitance Range	C_R	6.8 ~ 470µF					
Cap. Tolerance	ΔC	±20% (120Hz ▪ 20°C)					
Leakage Current (20°C ▪ V_R applied)	I_{LEAK}	≤ $0.01 \cdot C_R \cdot V_R$ or 3µA, whichever is greater ▪ After 2 minutes [I_{LEAK} (µA) ; C_R (µF) ; V_R (V)]					
Dissipation Factor % (20°C ▪ 120Hz)	tanδ	V_R (V DC)	6.3	10	16	25	35
		tanδ (%)	18	16	14	12	12
Low Temperature Characteristics at 120Hz	Z ratio max.	V_R (V DC)	6.3	10	16	25	35
		Z-25°C/Z+20°C	2	2	2	2	2
		Z-40°C/Z+20°C	3	3	2	2	2
		Z-55°C/Z+20°C	3	3	3	3	3

Lifetime Test		
Endurance 105°C (V_R applied)	Test	**1000 hours**
	△C/C_R	≤ ±20% of initial measured value
	tanδ	≤ 200% of initial specified value
	I_{Leak}	≤ the initial specified value
Shelf Life 105°C (V_R = 0)	Test	**1000 hours**
	△C/C_R	≤ ±20% of initial measured value
	tanδ	≤ 200% of initial specified value
	I_{Leak}	≤ the initial specified value
	Before measurement: Restore capacitor to 20°C, apply V_R for 30 min according JIS-C-5101-4	

MULTIPLIER K_f for RIPPLE CURRENT vs. FREQUENCY

C_R (µF) / Frequency (Hz)	50/60	100/120	400	1k	10k	50k - 100k
$C_R \leq 10$	0.47	0.59	0.76	0.85	0.91	1
$10 < C_R \leq 100$	0.52	0.65	0.8	0.89	0.97	1
$100 \leq C_R$	0.58	0.72	0.84	0.9	0.98	1

For further information please contact sales@capxon.org

STANDARD RATINGS

Part number shows bulk version with straight leads

V_R (V)	C_R (µF)	ø D (mm)	L (mm)	Z ▪ Max. Impedance +20°C ▪ 100kHz (mΩ)	I_R ▪ Max. Ripple Current +105°C ▪ 100kHz (mA rms)	CapXon Part Number
6.3	33	5	7	1700	110	SZ330M6R3C070A
	47	5	7	1700	110	SZ470M6R3C070A
	68	6.3	7	800	160	SZ680M6R3E070A
	100	6.3	7	800	160	SZ101M6R3E070A
	120	6.3	7	700	165	SZ121M6R3E070A
	150	6.3	7	600	178	SZ151M6R3E070A
	180	8	7	580	190	SZ181M6R3F070A
	220	8	7	500	200	SZ221M6R3F070A
	330	8	7	350	350	SZ331M6R3F070A
	470	8	9	300	400	SZ471M6R3F090A
10	22	4	7	3300	70	SZ220M010B070A
	33	5	7	1700	110	SZ330M010C070A
	47	5	7	800	160	SZ470M010C070A
	68	6.3	7	800	160	SZ680M010E070A
	100	6.3	7	500	200	SZ101M010E070A
	120	6.3	7	480	205	SZ121M010E070A
	150	8	7	450	230	SZ151M010F070A
	180	8	7	450	250	SZ181M010F070A
	220	8	7	350	280	SZ221M010F070A
	330	8	9	300	320	SZ331M010F090A
	470	10	9	220	430	SZ471M010G090A
16	22	5	7	1700	115	SZ220M016C070A
	33	6.3	7	800	160	SZ330M016E070A
	47	6.3	7	800	160	SZ470M016E070A
	68	8	7	500	200	SZ680M016F070A
	100	8	7	450	200	SZ101M016F070A
	120	8	7	350	350	SZ121M016F070A
	150	8	7	320	370	SZ151M016F070A
	180	8	7	300	400	SZ181M016F070A
	220	8	7	260	430	SZ221M016F070A
	330	8	9	220	500	SZ331M016F090A
25	10	4	7	3000	70	SZ100M025B070A
	22	5	7	1700	110	SZ220M025C070A
	33	6.3	7	800	160	SZ330M025E070A
	47	8	7	500	200	SZ470M025F070A
	68	8	7	500	200	SZ680M025F070A
	100	8	7	350	250	SZ101M025F070A
	150	8	7	400	340	SZ151M025F070A
	180	8	9	250	450	SZ181M025F090A
	220	8	9	220	600	SZ221M025F090A
	330	10	9	150	750	SZ331M025G090A

See "PACKAGING INFORMATION" to taped or formed products.

For further information please contact sales@capxon.org

STANDARD RATINGS

Part number shows bulk version with straight leads

V_R (V)	C_R (µF)	ø D (mm)	L (mm)	Z ▪ Max. Impedance +20°C ▪ 100kHz (mΩ)	I_R ▪ Max. Ripple Current +105°C ▪ 100kHz (mA rms)	CapXon Part Number
35	6.8	4	7	3300	70	SZ6R8M035B070A
	10	5	7	1700	110	SZ100M035C070A
	22	6.3	7	800	160	SZ220M035E070A
	33	8	7	500	200	SZ330M035F070A
	47	8	7	450	245	SZ470M035F070A
	68	8	7	420	280	SZ680M035F070A

See "PACKAGING INFORMATION" to taped or formed products.

DIMENSIONS ▪ All dimensions in mm

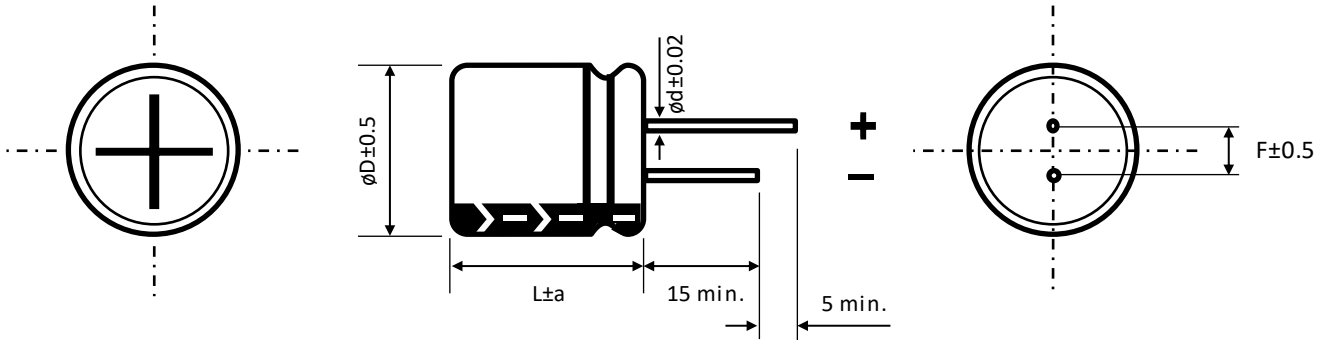

ø D	5	6.3	8		10	
F	2	2.5	3.5		5	
ø d	0.45	0.5	0.5		0.6	
a	1	1	L = 7	L = 9	L = 7	L = 9
			1	1.5	1	1.5

PRECAUTIONS, GUIDELINES AND PACKAGING INFORMATON

Unless otherwise agreed in individual specifications, all products are subject to our "General Precautions and Guidelines" as well as our "Packaging Information". Please refer to the following links in the table.

General Precautions and Guidelines	Packaging Information Liquid Radial
Page 837	Page 336

For further information please contact sales@capxon.org

DISCLAIMER

All product related data (e.g. specification, statements and general information) are subject to change without any notice. It is necessary that the customer observes all product related technical / application information and handling instructions.

CapXon products are designed and manufactured according to severe quality and safety standards. Under no circumstance, CapXon warrants that any CapXon product is suitable for the purposes intended for your application, even CapXon knows the application. It is customer's duty and obligation to check and make sure that CapXon products are suitable for the purposes intended and select the correct and proper CapXon product. Customers are requested to perform a sufficient validation and reliability evaluation to assure needed safety level and reliability performance by suitable designs and to apply proper safeguards (e.g. redundancies, protective circuits).

Particular operating conditions (ambient temperature, ripple current, voltage, thermal resistance, etc.) as well as storage, production or assembly may affect the performance and the lifetime of the capacitor. Please consult CapXon for lifetime estimation, failure mode considerations or worst-case scenarios according to the product technology, product tolerances / deviations or change of the characteristics of the capacitor due to shipment, storage, handling, production and usage.

For aerospace or military application, life-saving, life-sustaining, safety critical applications or any application where failure may cause severe personal injury or death, please consult us before design-in the capacitor in your application.

Except for the written expressed warranties, CapXon does not impliedly, by assumption or whatever else, warrant, undertake, promise any other warranty or guaranty for any CapXon product.

For further information, please visit our website www.capxongroup.com or contact CapXon directly.

KZ SERIES ▪ LOW IMPEDANCE 105°C TYPE



KEY FEATURES

LOW IMPEDANCE

- **ALUMINUM ELECTROLYTIC CAPACITOR** ▪ THT type
- Endurance: 105°C ▪ 1000 hours up to 2 000 hours
- Low impedance and high ripple current
- Wide capacitance range
- Small dimensions

HF Halogen Free

RoHS & REACH COMPLIANT

SPECIFICATIONS

Items		Performance Characteristics						
Operating Temperature Range		-40 ~ +105°C						
Rated Voltage Range	V_R	6.3 ~ 50V DC						
Surge Voltage	V_S	$V_S = 1.15 \cdot V_R$						
Capacitance Range	C_R	0.47 ~ 6800µF						
Cap. Tolerance	ΔC	±20% (120Hz ▪ 20°C)						
Leakage Current (20°C ▪ V_R applied)	I_{LEAK}	≤ $0.01 \cdot C_R \cdot V_R$ or 3µA, whichever is greater ▪ After 2 minutes [I_{LEAK} (µA) ; C_R (µF) ; V_R (V)]						
Dissipation Factor % (20°C ▪ 120Hz)	tanδ	V_R (V DC)	6.3	10	16	25	35	50
		tanδ (%)	18	16	14	12	10	9
		For C_R ≥ 1000µF, add 2% per every multiple 1000µF of rated capacitance value						
Low Temperature Characteristics at 120Hz	Z ratio max.	V_R (V DC)	6.3	10	16	25	35	50
		Z-25°C/Z+20°C	4	3	3	3	3	3
		Z-40°C/Z+20°C	8	6	4	3	3	3
		For capacitance > 1000µF						
		Z-25°C/Z+20°C	Add 0.5 for every multiple 1000µF of rated capacitance value					
		Z-40°C/Z+20°C	Add 1 for every multiple 1000µF of rated capacitance value					

Lifetime Test			
Endurance 105°C (V_R & I_R applied)	Test	**2000 hours**	≥ ø D 8 mm
		1000 hours	ø D 5 ~ 6.3 mm
	△C/C_R	≤ ±20% of initial measured value	
	tanδ	≤ 200% of initial specified value	
	I_{Leak}	≤ the initial specified value	
Shelf Life 105°C (V_R = 0)	Test	**1000 hours**	
	△C/C_R	≤ ±20% of initial measured value	
	tanδ	≤ 200% of initial specified value	
	I_{Leak}	≤ the initial specified value	
	Before measurement: Restore capacitor to 20°C, apply V_R for 30 min according JIS-C-5101-4		

For further information please contact sales@capxon.org

STANDARD RATINGS

Part number shows bulk version with straight leads

V_R (V)	C_R (µF)	ø D (mm)	L (mm)	Z ▪ Max. Impedance +20°C ▪ 100kHz (mΩ)	I_R ▪ Max. Ripple Current +105°C ▪ 100kHz (mA rms)	CapXon Part Number
6.3	22	5	11	3000	80	KZ220M6R3C110A
	33	5	11	2000	90	KZ330M6R3C110A
	47	5	11	1500	140	KZ470M6R3C110A
	56	5	11	1500	150	KZ560M6R3C110A
	68	5	11	1100	160	KZ680M6R3C110A
	100	5	11	1000	170	KZ101M6R3C110A
	120	5	11	900	173	KZ121M6R3C110A
	150	5	11	850	178	KZ151M6R3C110A
	180	6.3	11	720	215	KZ181M6R3E110A
	220	6.3	11	620	295	KZ221M6R3E110A
	270	6.3	11	500	320	KZ271M6R3E110A
	330	6.3	11	450	380	KZ331M6R3E110A
	470	8	11.5	220	460	KZ471M6R3F115A
	560	8	11.5	220	490	KZ561M6R3F115A
	680	8	11.5	190	520	KZ681M6R3F115A
	820	8	11.5	190	605	KZ821M6R3F115A
	1000	8	11.5	180	680	KZ102M6R3F115A
	1200	10	12.5	150	750	KZ122M6R3G125A
	1500	10	12.5	140	820	KZ152M6R3G125A
	1800	10	16	120	920	KZ182M6R3G160A
	2200	10	20	100	1150	KZ222M6R3G200A
	2700	10	20	75	1500	KZ272M6R3G200A
	3300	10	20	60	1620	KZ332M6R3G200A
	3900	13	25	58	1820	KZ392M6R3I250A
	4700	13	25	40	1920	KZ472M6R3I250A
	5600	13	30	38	2210	KZ562M6R3I300A
	6800	16	25	32	2380	KZ682M6R3J250A
10	22	5	11	2500	90	KZ220M010C110A
	33	5	11	2000	105	KZ330M010C110A
	47	5	11	1300	155	KZ470M010C110A
	56	5	11	1200	165	KZ560M010C110A
	68	5	11	1000	175	KZ680M010C110A
	100	5	11	750	215	KZ101M010C110A
	120	6.3	11	730	240	KZ121M010E110A
	150	6.3	11	600	225	KZ151M010E110A
	180	6.3	11	580	280	KZ181M010E110A
	220	6.3	11	430	300	KZ221M010E110A
	270	8	11.5	280	405	KZ271M010F115A
	330	8	11.5	250	465	KZ331M010F115A
	470	8	11.5	220	500	KZ471M010F115A
	560	8	11.5	170	620	KZ561M010F115A
	680	8	11.5	120	750	KZ681M010F115A
	820	10	12.5	100	805	KZ821M010G125A
	1000	10	12.5	80	1050	KZ102M010G125A

See "PACKAGING INFORMATION" to taped or formed products.

STANDARD RATINGS

Part number shows bulk version with straight leads

V_R (V)	C_R (µF)	ø D (mm)	L (mm)	Z ▪ Max. Impedance +20°C ▪ 100kHz (mΩ)	I_R ▪ Max. Ripple Current +105°C ▪ 100kHz (mA rms)	CapXon Part Number
10	1200	10	16	65	1150	KZ122M010G160A
	1500	10	16	62	1210	KZ152M010G160A
	1800	10	20	60	1280	KZ182M010G200A
	2200	10	20	50	1520	KZ222M010G200A
	2700	13	20	48	1580	KZ272M010I200A
	3300	13	20	43	1700	KZ332M010I200A
	3900	13	25	40	1860	KZ392M010I250A
	4700	13	25	38	1950	KZ472M010I250A
	5600	16	25	33	2290	KZ562M010J250A
	6800	16	25	28	2480	KZ682M010J250A
16	10	5	11	4000	80	KZ100M016C110A
	22	5	11	2000	110	KZ220M016C110A
	33	5	11	1800	114	KZ330M016C110A
	47	5	11	1000	160	KZ470M016C110A
	56	5	11	800	180	KZ560M016C110A
	68	5	11	650	200	KZ680M016C110A
	100	5	11	550	255	KZ101M016C110A
	120	6.3	11	450	270	KZ121M016E110A
	150	6.3	11	400	292	KZ151M016E110A
	180	6.3	11	320	380	KZ181M016E110A
	220	6.3	11	250	430	KZ221M016E110A
	270	8	11.5	200	480	KZ271M016F115A
	330	8	11.5	150	595	KZ331M016F115A
	470	8	11.5	150	650	KZ471M016F115A
	560	8	11.5	120	730	KZ561M016F115A
	680	10	12.5	90	890	KZ681M016G125A
	820	10	12.5	85	980	KZ821M016G125A
	1000	10	16	70	1180	KZ102M016G160A
	1200	10	20	60	1320	KZ122M016G200A
	1500	10	20	56	1450	KZ152M016G200A
	1800	10	20	53	1510	KZ182M016G200A
	2200	13	20	40	1820	KZ222M016I200A
	2700	13	20	35	2050	KZ272M016I200A
	3300	13	25	33	2300	KZ332M016I250A
	3900	16	25	33	2550	KZ392M016J250A
	4700	16	25	32	2580	KZ472M016J250A
	5600	16	31.5	30	2650	KZ562M016J315A
	6800	16	31.5	24	2900	KZ682M016J315A
25	4.7	5	11	3500	72	KZ4R7M025C110A
	5.6	5	11	3500	75	KZ5R6M025C110A
	6.8	5	11	2800	83	KZ6R8M025C110A
	10	5	11	2500	87	KZ100M025C110A
	22	5	11	1800	118	KZ220M025C110A
	33	5	11	1400	155	KZ330M025C110A

See "PACKAGING INFORMATION" to taped or formed products.

For further information please contact sales@capxon.org

STANDARD RATINGS

Part number shows bulk version with straight leads

V_R (V)	C_R (µF)	ø D (mm)	L (mm)	Z ▪ Max. Impedance +20°C ▪ 100kHz (mΩ)	I_R ▪ Max. Ripple Current +105°C ▪ 100kHz (mA rms)	CapXon Part Number
25	47	5	11	900	183	KZ470M025C110A
	56	5	11	830	207	KZ560M025C110A
	68	5	11	690	210	KZ680M025C110A
	100	6.3	11	340	378	KZ101M025E110A
	120	6.3	11	330	380	KZ121M025E110A
	150	8	11.5	325	390	KZ151M025F115A
	180	8	11.5	250	430	KZ181M025F115A
	220	8	11.5	150	550	KZ221M025F115A
	270	8	11.5	150	520	KZ271M025F115A
	330	8	11.5	130	710	KZ331M025F115A
	470	8	11.5	78	980	KZ471M025F115A
	470	8	16	70	1050	KZ471M025F160A
	560	10	16	65	1080	KZ561M025G160A
	680	10	16	65	1100	KZ681M025G160A
	820	10	20	50	1350	KZ821M025G200A
	1000	10	20	45	1580	KZ102M025G200A
	1200	13	20	40	1720	KZ122M025I200A
	1500	13	20	40	1780	KZ152M025I200A
	1800	13	20	35	1980	KZ182M025I200A
	2200	13	25	33	2000	KZ222M025I250A
	2700	13	25	32	2250	KZ272M025I250A
	3300	16	25	27	2580	KZ332M025J250A
	4700	16	31.5	25	2850	KZ472M025J315A
	5600	16	35.5	25	3000	KZ562M025J355A
	6800	18	35.5	25	3550	KZ682M025K355A
35	4.7	5	11	3500	87	KZ4R7M035C110A
	5.6	5	11	3000	95	KZ5R6M035C110A
	6.8	5	11	2700	98	KZ6R8M035C110A
	10	5	11	2200	107	KZ100M035C110A
	22	5	11	1500	150	KZ220M035C110A
	33	5	11	1200	180	KZ330M035C110A
	47	5	11	750	257	KZ470M035C110A
	56	6.3	11	600	283	KZ560M035E110A
	68	6.3	11	550	290	KZ680M035E110A
	100	6.3	11	260	430	KZ101M035E110A
	120	8	11.5	200	470	KZ121M035F115A
	150	8	11.5	200	510	KZ151M035F115A
	180	8	11.5	180	570	KZ181M035F115A
	220	8	11.5	130	620	KZ221M035F115A
	270	10	12.5	120	850	KZ271M035G125A
	330	8	16	80	1050	KZ331M035F160A
	470	10	16	65	1100	KZ471M035G160A
	560	13	20	60	1300	KZ561M035I200A
	680	13	20	56	1570	KZ681M035I200A

See "PACKAGING INFORMATION" to taped or formed products.

STANDARD RATINGS

Part number shows bulk version with straight leads

V_R (V)	C_R (µF)	ø D (mm)	L (mm)	Z ▪ Max. Impedance +20°C ▪ 100kHz (mΩ)	I_R ▪ Max. Ripple Current +105°C ▪ 100kHz (mA rms)	CapXon Part Number
35	820	13	20	48	1700	KZ821M035I200A
	1000	13	20	42	1820	KZ102M035I200A
	1200	13	25	38	2130	KZ122M035I250A
	1500	13	25	38	2150	KZ152M035I250A
	1800	13	25	35	2450	KZ182M035I250A
	2200	16	25	34	2650	KZ222M035J250A
	2700	16	31.5	30	2690	KZ272M035J315A
	3300	16	35.5	27	2750	KZ332M035J355A
	4700	18	35.5	25	2940	KZ472M035K355A
	5600	18	35.5	24	3050	KZ562M035K355A
50	0.47	5	11	5000	28	KZR47M050C110A
	1	5	11	3800	42	KZ010M050C110A
	2.2	5	11	2800	55	KZ2R2M050C110A
	3.3	5	11	2000	62	KZ3R3M050C110A
	4.7	5	11	2000	90	KZ4R7M050C110A
	5.6	5	11	1800	108	KZ5R6M050C110A
	6.8	5	11	1800	112	KZ6R8M050C110A
	10	5	11	1750	120	KZ100M050C110A
	22	5	11	1500	150	KZ220M050C110A
	33	6.3	11	780	233	KZ330M050E110A
	47	6.3	11	650	270	KZ470M050E110A
	56	6.3	11	600	290	KZ560M050E110A
	68	6.3	11	500	310	KZ680M050E110A
	100	8	11.5	170	480	KZ101M050F115A
	120	10	12.5	164	500	KZ121M050G125A
	150	10	12.5	160	560	KZ151M050G125A
	180	10	12.5	140	580	KZ181M050G125A
	220	10	16	90	640	KZ221M050G160A
	270	10	16	80	905	KZ271M050G160A
	330	10	16	70	1050	KZ331M050G160A
	470	13	20	50	1450	KZ471M050I200A
	560	13	20	50	1510	KZ561M050I200A
	680	13	20	50	1750	KZ681M050I200A
	820	13	25	40	1980	KZ821M050I250A
	1000	13	25	40	2000	KZ102M050I250A
	1200	16	25	38	2200	KZ122M050J250A
	1500	16	25	38	2300	KZ152M050J250A
	1800	16	31.5	36	2610	KZ182M050J315A
	2200	16	31.5	33	2900	KZ222M050J315A
	2700	18	35.5	28	3000	KZ272M050K355A
	3300	18	35.5	26	3050	KZ332M050K355A

See "PACKAGING INFORMATION" to taped or formed products.

DIMENSIONS ▪ All dimensions in mm

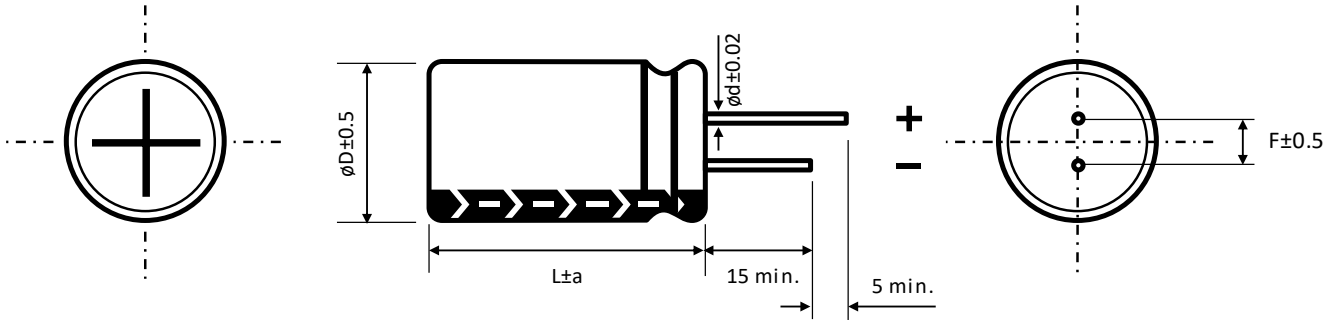

ø D	5	6.3	8		10	13	16	18
F	2	2.5	3.5		5	5	7.5	7.5
ø d	0.5		L < 20	L ≥ 20	0.6		0.8	
			0.5	0.6				

a	ø D < 16	ø D = 16		ø D = 18	
	1.5	L = 25 to 35.5	L < 25 and L ≥ 40	L = 25 to 31.5	L < 25 and L ≥ 35.5
		1.5	2	1.5	2

MULTIPLIER K_f for RIPPLE CURRENT vs. FREQUENCY

C_R (µF) / Frequency (Hz)	50/60	100/120	400	1k	10k	50k - 100k
$C_R \leq 10$	0.47	0.59	0.76	0.85	0.97	1
$10 < C_R \leq 100$	0.52	0.65	0.8	0.89	0.97	1
$100 < C_R \leq 1000$	0.58	0.72	0.84	0.9	0.98	1
$1000 \leq C_R$	0.63	0.78	0.87	0.91	0.98	1

PRECAUTIONS, GUIDELINES AND PACKAGING INFORMATON

Unless otherwise agreed in individual specifications, all products are subject to our “General Precautions and Guidelines” as well as our “Packaging Information”. Please refer to the following links in the table.

General Precautions and Guidelines	Packaging Information Liquid Radial
Page 837	Page 336

For further information please contact sales@capxon.org

DISCLAIMER

All product related data (e.g. specification, statements and general information) are subject to change without any notice. It is necessary that the customer observes all product related technical / application information and handling instructions.

CapXon products are designed and manufactured according to severe quality and safety standards. Under no circumstance, CapXon warrants that any CapXon product is suitable for the purposes intended for your application, even CapXon knows the application. It is customer's duty and obligation to check and make sure that CapXon products are suitable for the purposes intended and select the correct and proper CapXon product. Customers are requested to perform a sufficient validation and reliability evaluation to assure needed safety level and reliability performance by suitable designs and to apply proper safeguards (e.g. redundancies, protective circuits).

Particular operating conditions (ambient temperature, ripple current, voltage, thermal resistance, etc.) as well as storage, production or assembly may affect the performance and the lifetime of the capacitor. Please consult CapXon for lifetime estimation, failure mode considerations or worst-case scenarios according to the product technology, product tolerances / deviations or change of the characteristics of the capacitor due to shipment, storage, handling, production and usage.

For aerospace or military application, life-saving, life-sustaining, safety critical applications or any application where failure may cause severe personal injury or death, please consult us before design-in the capacitor in your application.

Except for the written expressed warranties, CapXon does not impliedly, by assumption or whatever else, warrant, undertake, promise any other warranty or guaranty for any CapXon product.

For further information, please visit our website www.capxongroup.com or contact CapXon directly.

KS SERIES ▪ OVERVOLTAGE VENT 105°C TYPE



KEY FEATURES

OVERVOLTAGE VENT

- **ALUMINUM ELECTROLYTIC CAPACITOR** ▪ THT type
- Endurance: 105°C ▪ 2000 hours
- High ripple current
- Defined vent operation in overvoltage situation
- High voltage version

SPECIFICATIONS

Items		Performance Characteristics		
Operating Temperature Range		-25 ~ +105°C		
Rated Voltage Range	V_R	200 ~ 400V DC		
Surge Voltage	V_S	Defined vent operation in overvoltage situation; $V_S = 1.50 \cdot V_R$		
Capacitance Range	C_R	4.7 ~ 470µF		
Cap. Tolerance	ΔC	±20% (120Hz ▪ 20°C)		
Leakage Current (20°C ▪ V_R applied)	I_{LEAK}	≤ $0.01C_R \cdot V_R$ or 3µA ▪ After 1 minute [I_{LEAK} (µA) ; C_R (µF) ; V_R (V)]		
Dissipation Factor % (20°C ▪ 120Hz)	tanδ	V_R (V DC)	200	400
		tanδ (%)	15	15
Low Temperature Characteristics at 120Hz	Z ratio max.	V_R (V DC)	200	400
		Z-25°C/Z+20°C	3	6

Lifetime Test		
Endurance 105°C (V_R & I_R applied)	Test	**2000 hours**
	$\triangle C/C_R$	≤ ±20% of initial measured value
	tanδ	≤ 200% of initial specified value
	I_{Leak}	≤ the initial specified value
Shelf Life 105°C (V_R = 0)	Test	**1000 hours**
	$\triangle C/C_R$	≤ ±20% of initial measured value
	tanδ	≤ 200% of initial specified value
	I_{Leak}	≤ the initial specified value
	Before measurement: Restore capacitor to 20°C, apply V_R for 30 min according JIS-C-5101-4	

MULTIPLIER K_f for RIPPLE CURRENT vs. FREQUENCY

V_R (V)	C_R (µF) / Frequency (Hz)	50/60	100/120	400	1k	≥ 10k
200	22 ~ 470	0.85	1	1.1	1.25	1.5
400	4.7 ~ 68	0.85	1	1.05	1.2	1.4
	82 ~ 150	0.85	1	1.03	1.15	1.35

For further information please contact sales@capxon.org

STANDARD RATINGS

Part number shows bulk version with straight leads

V_R (V)	C_R (µF)	ø D (mm)	L (mm)	I_R ▪ Max. Ripple Current +105°C ▪ 120Hz (mA rms)	CapXon Part Number
200	22	10	20	120	KS220M200G200A
	33	10	25	160	KS330M200G250A
	33	13	20	160	KS330M200I200A
	47	10	30	195	KS470M200G300A
	47	13	20	195	KS470M200I200A
	56	13	25	210	KS560M200I250A
	68	13	25	270	KS680M200I250A
	68	16	20	270	KS680M200J200A
	82	13	30	310	KS820M200I300A
	82	16	20	320	KS820M200J200A
	82	16	25	360	KS820M200J250A
	100	16	25	400	KS101M200J250A
	100	18	20	400	KS101M200K200A
	120	16	25	460	KS121M200J250A
	120	16	31.5	500	KS121M200J315A
	120	18	25	500	KS121M200K250A
	150	16	31.5	560	KS151M200J315A
	150	16	35.5	590	KS151M200J355A
	150	18	25	560	KS151M200K250A
	180	16	35.5	600	KS181M200J355A
	180	18	31.5	650	KS181M200K315A
	220	18	31.5	700	KS221M200K315A
	220	18	35.5	740	KS221M200K355A
	330	18	35.5	780	KS331M200K355A
	330	18	40	840	KS331M200K400A
	390	18	40	860	KS391M200K400A
	390	18	45	920	KS391M200K450A
	470	18	45	1120	KS471M200K450A
400	4.7	10	12.5	60	KS4R7M400G125A
	10	10	16	100	KS100M400G160A
	10	10	20	125	KS100M400G200A
	22	13	20	135	KS220M400I200A
	22	13	25	150	KS220M400I250A
	22	16	20	150	KS220M400J200A
	33	13	25	180	KS330M400I250A
	33	16	20	210	KS330M400J200A
	47	16	31.5	300	KS470M400J315A
	47	16	35.5	320	KS470M400J355A
	47	18	25	300	KS470M400K250A
	47	18	31.5	320	KS470M400K315A
	56	16	31.5	360	KS560M400J315A
	56	18	25	350	KS560M400K250A
	56	18	31.5	370	KS560M400K315A
	68	16	31.5	365	KS680M400J315A

See "PACKAGING INFORMATION" to taped or formed products.

STANDARD RATINGS

Part number shows bulk version with straight leads

V_R (V)	C_R (µF)	ø D (mm)	L (mm)	I_R ▪ Max. Ripple Current +105°C ▪ 120Hz (mA rms)	CapXon Part Number
400	68	16	35.5	380	KS680M400J355A
	68	18	31.5	375	KS680M400K315A
	82	16	35.5	410	KS820M400J355A
	82	18	31.5	410	KS820M400K315A
	82	18	35.5	450	KS820M400K355A
	100	16	35.5	470	KS101M400J355A
	100	18	31.5	470	KS101M400K315A
	100	18	35.5	490	KS101M400K355A
	120	18	31.5	520	KS121M400K315A
	120	18	35.5	540	KS121M400K355A
	120	18	40	560	KS121M400K400A
	150	18	35.5	770	KS151M400K355A
	150	18	40	790	KS151M400K400A

See "PACKAGING INFORMATION" to taped or formed products.

DIMENSIONS ▪ All dimensions in mm

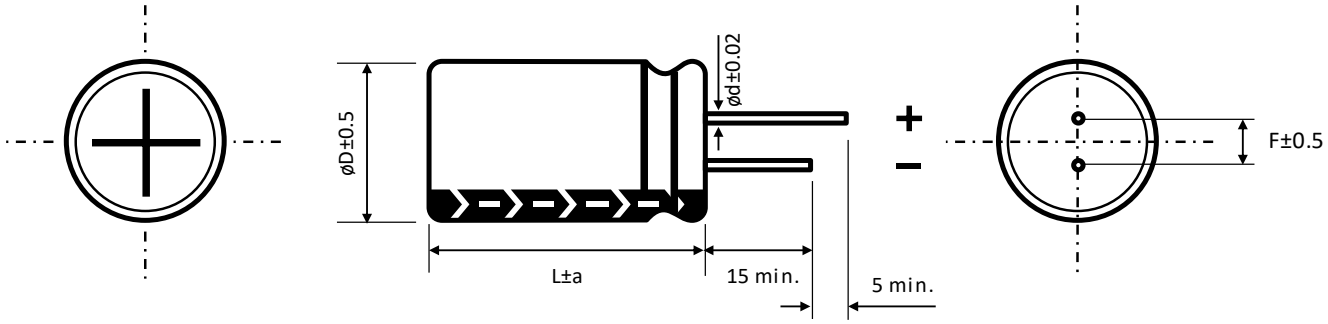

ø D	10	13	16	18
F	5	5	7.5	7.5
ø d	0.6		0.8	

a	ø D < 16	ø D = 16		ø D = 18	
	1.5	L = 25 to 35.5	L < 25 and L ≥ 40	L = 25 to 31.5	L < 25 and L ≥ 35.5
		1.5	2	1.5	2

For further information please contact sales@capxon.org

DEFINED OVERVOLTAGE VENT OPERATION

Ordinary Aluminum Electrolytic Capacitors with rated voltages of $V_R > 315V$ have a surge voltage of $V_S = 1.10 \cdot V_R$. Surge voltage is the maximum voltage which may applied to the capacitor for a short time. In maximum 5 times with a duration of one minute each per hour, according JIS C 5101-4.

It applies to $V_R = 200V$ then $V_S = 220V$ and to $V_R = 400V$ then $V_S = 440V$.

The leakage current of the capacitor increases exponentially when the rated voltage is exceeded and increases the pressure inside the component. In the worst case, the capacitor explodes.

Due to its internal structure, the KS series can cope with surge voltages with 1.5 times the rated voltage and definitely opens its safety vent. An explosion of the component is impossible.

PRECAUTIONS, GUIDELINES AND PACKAGING INFORMATON

Unless otherwise agreed in individual specifications, all products are subject to our “General Precautions and Guidelines” as well as our “Packaging Information”. Please refer to the following links in the table.

General Precautions and Guidelines	Packaging Information Liquid Radial
Page 837	Page 336

DISCLAIMER

All product related data (e.g. specification, statements and general information) are subject to change without any notice. It is necessary that the customer observes all product related technical / application information and handling instructions.

CapXon products are designed and manufactured according to severe quality and safety standards. Under no circumstance, CapXon warrants that any CapXon product is suitable for the purposes intended for your application, even CapXon knows the application. It is customer's duty and obligation to check and make sure that CapXon products are suitable for the purposes intended and select the correct and proper CapXon product. Customers are requested to perform a sufficient validation and reliability evaluation to assure needed safety level and reliability performance by suitable designs and to apply proper safeguards (e.g. redundancies, protective circuits).

Particular operating conditions (ambient temperature, ripple current, voltage, thermal resistance, etc.) as well as storage, production or assembly may affect the performance and the lifetime of the capacitor. Please consult CapXon for lifetime estimation, failure mode considerations or worst-case scenarios according to the product technology, product tolerances / deviations or change of the characteristics of the capacitor due to shipment, storage, handling, production and usage.

For aerospace or military application, life-saving, life-sustaining, safety critical applications or any application where failure may cause severe personal injury or death, please consult us before design-in the capacitor in your application.

Except for the written expressed warranties, CapXon does not impliedly, by assumption or whatever else, warrant, undertake, promise any other warranty or guaranty for any CapXon product.

For further information, please visit our website www.capxongroup.com or contact CapXon directly.

KY SERIES ▪ SLIM SIZE 105°C TYPE



KEY FEATURES

SLIM TYPE

- **ALUMINUM ELECTROLYTIC CAPACITOR** ▪ THT type
- Endurance: 105°C ▪ 2000 hours
- Slim design for height limited applications
- High reliability
- High voltage version

SPECIFICATIONS

Items		Performance Characteristics					
Operating Temperature Range		-25 ~ +105°C					
Rated Voltage Range	V_R	250 ~ 450V DC					
Surge Voltage	V_S	($V_R \le 315V$): $V_S = 1.15 \cdot V_R$ ($V_R > 315V$): $V_S = 1.10 \cdot V_R$					
Capacitance Range	C_R	12 ~ 150µF					
Cap. Tolerance	ΔC	±20% (120Hz ▪ 20°C)					
Leakage Current (20°C ▪ V_R applied)	I_{LEAK}	≤ $\sqrt{3} \cdot C_R \cdot V_R$ ▪ After 5 minutes [I_{LEAK} (µA) ; C_R (µF) ; V_R (V)]					
Dissipation Factor % (20°C ▪ 120Hz)	tanδ	V_R (V DC)	250	350	400	420	450
		tanδ (%)	15	15	15	20	20
Low Temperature Characteristics at 120Hz	Z ratio max.	V_R (V DC)	250	350	400	420	450
		Z-25°C/Z+20°C	3	8	8	8	8

Lifetime Test		
Endurance 105°C (V_R & I_R applied)	Test	**2000 hours**
	△C/C_R	≤ ±20% of initial measured value
	tanδ	≤ 200% of initial specified value
	I_{Leak}	≤ the initial specified value
Shelf Life 105°C (V_R = 0)	Test	**1000 hours**
	△C/C_R	≤ ±20% of initial measured value
	tanδ	≤ 200% of initial specified value
	I_{Leak}	≤ the initial specified value
	Before measurement: Restore capacitor to 20°C, apply V_R for 30 min according JIS-C-5101-4	

MULTIPLIER K_f for RIPPLE CURRENT vs. FREQUENCY

V_R (V) / Frequency (Hz)	50/60	100/120	400	1k	100k
250 ~ 350	0.8	1	1.2	1.3	1.4
400 ~ 450	0.8	1	1.25	1.4	1.5

For further information please contact sales@capxon.org

STANDARD RATINGS

Part number shows bulk version with straight leads

V_R (V)	C_R (µF)	ø D (mm)	L (mm)	I_R ▪ Max. Ripple Current +105°C ▪ 120Hz (mA rms)	CapXon Part Number
250	22	8	30	200	KY220M250F300A
	27	8	30	220	KY270M250F300A
	33	8	30	240	KY330M250F300A
	39	8	35	270	KY390M250F350A
	47	8	40	330	KY470M250F400A
	56	10	35	380	KY560M250G350A
	68	10	35	435	KY680M250G350A
	82	10	40	500	KY820M250G400A
	100	10	45	585	KY101M250G450A
	120	13	35	620	KY121M250I350A
	150	13	40	670	KY151M250I400A
350	15	8	30	145	KY150M350F300A
	22	8	35	185	KY220M350F350A
	27	8	40	220	KY270M350F400A
	33	8	40	250	KY330M350F400A
	39	10	35	300	KY390M350G350A
	47	10	40	380	KY470M350G400A
	56	10	45	430	KY560M350G450A
	68	13	35	480	KY680M350I350A
	82	13	40	550	KY820M350I400A
	100	13	45	600	KY101M350I450A
400	15	8	30	170	KY150M400F300A
	22	8	35	220	KY220M400F350A
	27	8	40	255	KY270M400F400A
	27	10	30	255	KY270M400G300A
	33	8	45	280	KY330M400F450A
	33	10	30	280	KY330M400G300A
	39	8	50	330	KY390M400F500A
	39	10	35	330	KY390M400G350A
	47	10	40	430	KY470M400G400A
	47	13	30	430	KY470M400I300A
	56	10	50	480	KY560M400G500A
	56	13	30	450	KY560M400I300A
	68	10	55	550	KY680M400G550A
	68	13	35	520	KY680M400I350A
	68	13	40	550	KY680M400I400A
	82	13	40	580	KY820M400I400A
	100	13	45	620	KY101M400I450A
	100	13	50	650	KY101M400I500A
	120	13	55	750	KY121M400I550A
420	15	8	30	150	KY150M420F300A
	22	8	35	195	KY220M420F350A
	27	8	40	230	KY270M420F400A
	33	8	50	300	KY330M420F500A
	33	10	35	290	KY330M420G350A

See "PACKAGING INFORMATION" to taped or formed products.

STANDARD RATINGS

Part number shows bulk version with straight leads

V_R (V)	C_R (µF)	ø D (mm)	L (mm)	I_R ▪ Max. Ripple Current +105°C ▪ 120Hz (mA rms)	CapXon Part Number
420	39	10	40	315	KY390M420G400A
	39	13	30	315	KY390M420I300A
	47	10	40	360	KY470M420G400A
	47	13	30	360	KY470M420I300A
	56	10	50	440	KY560M420G500A
	56	13	30	400	KY560M420I300A
	68	13	35	470	KY680M420I350A
	82	13	40	550	KY820M420I400A
	100	13	50	620	KY101M420I500A
450	12	8	30	135	KY120M450F300A
	15	8	35	150	KY150M450F350A
	22	8	40	195	KY220M450F400A
	22	10	30	195	KY220M450G300A
	27	8	45	230	KY270M450F450A
	27	10	30	220	KY270M450G300A
	33	10	35	255	KY330M450G350A
	33	10	40	280	KY330M450G400A
	39	10	40	300	KY390M450G400A
	39	10	45	315	KY390M450G450A
	39	10	50	330	KY390M450G500A
	47	10	50	390	KY470M450G500A
	56	13	35	420	KY560M450I350A
	56	13	40	450	KY560M450I400A
	68	13	40	520	KY680M450I400A
	68	13	45	550	KY680M450I450A
	82	13	45	570	KY820M450I450A

See "PACKAGING INFORMATION" to taped or formed products.

DIMENSIONS ▪ All dimensions in mm

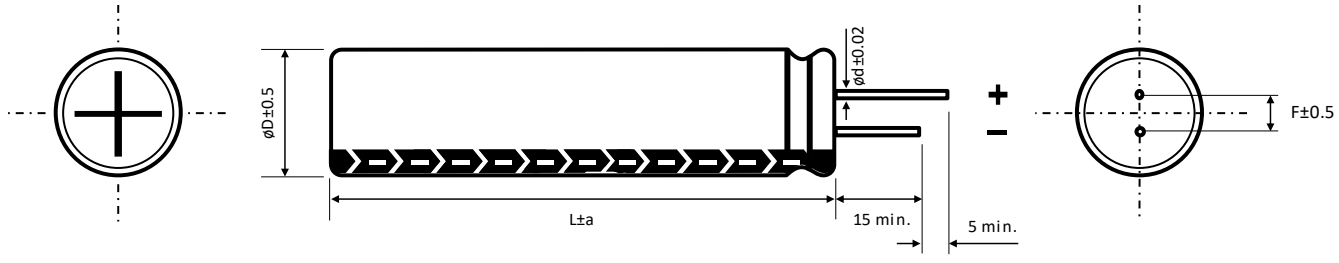

ø D	8	10	13
F	3.5	5	5
ø d	0.5	0.6	0.6
a	1.5	2	2

PRECAUTIONS, GUIDELINES AND PACKAGING INFORMATON

Unless otherwise agreed in individual specifications, all products are subject to our “General Precautions and Guidelines” as well as our “Packaging Information”. Please refer to the following links in the table.

General Precautions and Guidelines	Packaging Information Liquid Radial
Page 837	Page 336

DISCLAIMER

All product related data (e.g. specification, statements and general information) are subject to change without any notice. It is necessary that the customer observes all product related technical / application information and handling instructions.

CapXon products are designed and manufactured according to severe quality and safety standards. Under no circumstance, CapXon warrants that any CapXon product is suitable for the purposes intended for your application, even CapXon knows the application. It is customer's duty and obligation to check and make sure that CapXon products are suitable for the purposes intended and select the correct and proper CapXon product. Customers are requested to perform a sufficient validation and reliability evaluation to assure needed safety level and reliability performance by suitable designs and to apply proper safeguards (e.g. redundancies, protective circuits).

Particular operating conditions (ambient temperature, ripple current, voltage, thermal resistance, etc.) as well as storage, production or assembly may affect the performance and the lifetime of the capacitor. Please consult CapXon for lifetime estimation, failure mode considerations or worst-case scenarios according to the product technology, product tolerances / deviations or change of the characteristics of the capacitor due to shipment, storage, handling, production and usage.

For aerospace or military application, life-saving, life-sustaining, safety critical applications or any application where failure may cause severe personal injury or death, please consult us before design-in the capacitor in your application.

Except for the written expressed warranties, CapXon does not impliedly, by assumption or whatever else, warrant, undertake, promise any other warranty or guaranty for any CapXon product.

For further information, please visit our website www.capxongroup.com or contact CapXon directly.

KM SERIES ▪ STANDARD 105°C TYPE



KEY FEATURES

- **ALUMINUM ELECTROLYTIC CAPACITOR** ▪ THT type
- Endurance: 105°C ▪ 2000 hours
- Optimized for cost effective applications
- High capacitance range
- Wide voltage range, up to 500V

SPECIFICATIONS

Items		Performance Characteristics								
Operating Temperature Range		-40 ~ +105°C				-25 ~ +105°C				
Rated Voltage Range	V_R	6.3 ~ 100V DC				160 ~ 500V DC				
Surge Voltage	V_S	($V_R \le 315V$): $V_S = 1.15 \cdot V_R$				($V_R > 315V$): $V_S = 1.10 \cdot V_R$				
Capacitance Range	C_R	0.1 ~ 22000µF				0.47 ~ 560µF				
Cap. Tolerance	ΔC	±20% (120Hz ▪ 20°C)								
Leakage Current (20°C ▪ V_R applied)	I_{LEAK}	≤ $0.01 \cdot C_R \cdot V_R$ or 3µA, whichever is greater ▪ After 1 minute				≤ $0.03 \cdot C_R \cdot V_R$ or 3µA, whichever is greater ▪ After 1 minute				
		[I_{LEAK} (µA) ; C_R (µF) ; V_R (V)]								
Dissipation Factor % (20°C ▪ 120Hz)	tanδ	V_R (V DC)	6.3	10	16	25	35	50	63	100
		tanδ (%)	22	17	16	14	12	10	9	8
		V_R (V DC)	160	200	250	350	400	420	450	500
		tanδ (%)	12	12	12	15	15	17	17	22
		For $C_R \ge 1000µF$, add 2% per every multiple 1000µF of rated capacitance value								
Low Temperature Characteristics at 120Hz	Z ratio max.	V_R (V DC)	6.3	10	16	25	35	50	63	100
		Z-25°C/Z+20°C	4	3	2	2	2	2	2	2
		Z-40°C/Z+20°C	8	6	4	3	3	3	3	3
		V_R (V DC)	160	200	250	350	400	420	450	500
		Z-25°C/Z+20°C	2	2	3	5	6	6	6	6
		For capacitance > 1000µF								
		Z-25°C/Z+20°C	Add 0.5 for every multiple 1000µF of rated capacitance value							
		Z-40°C/Z+20°C	Add 1 for every multiple 1000µF of rated capacitance value							

Lifetime Test		
Endurance 105°C (V_R & I_R applied)	Test	**2000 hours**
	$\triangle C/C_R$	≤ ±20% of initial measured value
	tanδ	≤ 200% of initial specified value
	I_{Leak}	≤ the initial specified value
Shelf Life 105°C (V_R = 0)	Test	**1000 hours**
	$\triangle C/C_R$	≤ ±20% of initial measured value
	tanδ	≤ 200% of initial specified value
	I_{Leak}	≤ the initial specified value
	Before measurement: Restore capacitor to 20°C, apply V_R for 30 min according JIS-C-5101-4	

For further information please contact sales@capxon.org

STANDARD RATINGS

Part number shows bulk version with straight leads

V_R (V)	C_R (µF)	ø D (mm)	L (mm)	I_R ▪ Max. Ripple Current +105°C ▪ 120Hz (mA rms)	CapXon Part Number
6.3	33	5	11	54	KM330M6R3C110A
	47	5	11	65	KM470M6R3C110A
	68	5	11	75	KM680M6R3C110A
	100	5	11	96	KM101M6R3C110A
	120	5	11	110	KM121M6R3C110A
	150	5	11	120	KM151M6R3C110A
	150	6.3	11	130	KM151M6R3E110A
	180	6.3	11	140	KM181M6R3E110A
	220	6.3	11	160	KM221M6R3E110A
	330	6.3	11	195	KM331M6R3E110A
	470	6.3	11	220	KM471M6R3E110A
	470	8	11.5	270	KM471M6R3F115A
	560	8	11.5	310	KM561M6R3F115A
	680	8	11.5	360	KM681M6R3F115A
	820	8	11.5	390	KM821M6R3F115A
	1000	10	12.5	430	KM102M6R3G125A
	1200	10	12.5	550	KM122M6R3G125A
	1500	10	16	625	KM152M6R3G160A
	1800	10	16	710	KM182M6R3G160A
	2200	10	16	750	KM222M6R3G160A
	2200	10	20	775	KM222M6R3G200A
	2700	10	20	850	KM272M6R3G200A
	3300	13	20	960	KM332M6R3I200A
	3900	13	20	1000	KM392M6R3I200A
	4700	13	20	1150	KM472M6R3I200A
	5600	13	25	1300	KM562M6R3I250A
	6800	13	25	1480	KM682M6R3I250A
	8200	16	25	1520	KM822M6R3J250A
	10000	16	25	1680	KM103M6R3J250A
	12000	16	31.5	1750	KM123M6R3J315A
	15000	16	35.5	2075	KM153M6R3J355A
	18000	18	31.5	2150	KM183M6R3K315A
	22000	18	40	2300	KM223M6R3K400A
10	22	5	11	45	KM220M010C110A
	33	5	11	60	KM330M010C110A
	47	5	11	70	KM470M010C110A
	68	5	11	80	KM680M010C110A
	100	5	11	105	KM101M010C110A
	120	5	11	110	KM121M010C110A
	120	6.3	11	120	KM121M010E110A
	150	5	11	120	KM151M010C110A
	150	6.3	11	145	KM151M010E110A
	180	6.3	11	160	KM181M010E110A
	220	6.3	11	175	KM221M010E110A

See "PACKAGING INFORMATION" to taped or formed products.

STANDARD RATINGS

Part number shows bulk version with straight leads

V_R (V)	C_R (µF)	ø D (mm)	L (mm)	I_R ▪ Max. Ripple Current +105°C ▪ 120Hz (mA rms)	CapXon Part Number
10	330	6.3	11	205	KM331M010E110A
	330	8	11.5	255	KM331M010F115A
	470	6.3	11	235	KM471M010E110A
	470	8	11.5	290	KM471M010F115A
	560	8	11.5	330	KM561M010F115A
	560	10	12.5	340	KM561M010G125A
	680	8	11.5	365	KM681M010F115A
	680	8	16	410	KM681M010F160A
	820	10	12.5	480	KM821M010G125A
	1000	10	12.5	520	KM102M010G125A
	1200	10	16	630	KM122M010G160A
	1500	8	20	715	KM152M010F200A
	1500	10	16	770	KM152M010G160A
	1800	10	20	820	KM182M010G200A
	2200	10	20	860	KM222M010G200A
	2700	10	25	880	KM272M010G250A
	2700	13	20	920	KM272M010I200A
	3300	13	20	1100	KM332M010I200A
	3900	13	20	1280	KM392M010I200A
	4700	13	25	1350	KM472M010I250A
	5600	16	25	1490	KM562M010J250A
	6800	16	25	1670	KM682M010J250A
	8200	16	31.5	1840	KM822M010J315A
	10000	16	35.5	1900	KM103M010J355A
	12000	16	35.5	2050	KM123M010J355A
	15000	18	35.5	2180	KM153M010K355A
	18000	18	35.5	2205	KM183M010K355A
16	10	5	11	35	KM100M016C110A
	22	5	11	54	KM220M016C110A
	33	5	11	64	KM330M016C110A
	47	5	11	100	KM470M016C110A
	68	5	11	105	KM680M016C110A
	100	5	11	115	KM101M016C110A
	100	6.3	11	130	KM101M016E110A
	120	6.3	11	155	KM121M016E110A
	150	6.3	11	170	KM151M016E110A
	180	6.3	11	190	KM181M016E110A
	220	6.3	11	215	KM221M016E110A
	330	6.3	11	225	KM331M016E110A
	330	8	11.5	265	KM331M016F115A
	470	8	11.5	370	KM471M016F115A
	470	8	16	400	KM471M016F160A
	560	10	12.5	410	KM561M016G125A
	680	8	16	470	KM681M016F160A

See "PACKAGING INFORMATION" to taped or formed products.

For further information please contact sales@capxon.org

STANDARD RATINGS

Part number shows bulk version with straight leads

V_R (V)	C_R (µF)	ø D (mm)	L (mm)	I_R ▪ Max. Ripple Current +105°C ▪ 120Hz (mA rms)	CapXon Part Number
16	680	10	12.5	480	KM681M016G125A
	820	10	16	550	KM821M016G160A
	1000	10	12.5	540	KM102M016G125A
	1000	10	16	600	KM102M016G160A
	1200	10	20	700	KM122M016G200A
	1500	10	20	820	KM152M016G200A
	1800	13	20	920	KM182M016I200A
	2200	13	20	1000	KM222M016I200A
	2700	13	20	1080	KM272M016I200A
	3300	13	25	1200	KM332M016I250A
	3900	16	25	1490	KM392M016J250A
	4700	16	25	1600	KM472M016J250A
	5600	16	31.5	1720	KM562M016J315A
	6800	16	31.5	1900	KM682M016J315A
	8200	16	35.5	2020	KM822M016J355A
	10000	18	35.5	2060	KM103M016K355A
	12000	18	35.5	2150	KM123M016K355A
25	4.7	5	11	26	KM4R7M025C110A
	6.8	5	11	32	KM6R8M025C110A
	10	5	11	38	KM100M025C110A
	22	5	11	58	KM220M025C110A
	33	5	11	69	KM330M025C110A
	47	5	11	105	KM470M025C110A
	68	6.3	11	120	KM680M025E110A
	100	6.3	11	145	KM101M025E110A
	120	6.3	11	175	KM121M025E110A
	150	6.3	11	180	KM151M025E110A
	150	8	11.5	200	KM151M025F115A
	180	8	11.5	210	KM181M025F115A
	220	8	11.5	235	KM221M025F115A
	330	8	11.5	310	KM331M025F115A
	330	10	12.5	335	KM331M025G125A
	470	8	11.5	410	KM471M025F115A
	470	10	12.5	440	KM471M025G125A
	560	10	16	460	KM561M025G160A
	680	10	16	520	KM681M025G160A
	820	10	20	640	KM821M025G200A
	1000	10	20	710	KM102M025G200A
	1200	13	20	810	KM122M025I200A
	1500	13	20	900	KM152M025I200A
	1800	13	25	1050	KM182M025I250A
	2200	13	25	1200	KM222M025I250A
	2700	16	25	1320	KM272M025J250A
	3300	16	25	1460	KM332M025J250A

See "PACKAGING INFORMATION" to taped or formed products.

STANDARD RATINGS

Part number shows bulk version with straight leads

V_R (V)	C_R (µF)	ø D (mm)	L (mm)	I_R ▪ Max. Ripple Current +105°C ▪ 120Hz (mA rms)	CapXon Part Number
25	3900	16	31.5	1670	KM392M025J315A
	4700	16	35.5	1780	KM472M025J355A
	5600	16	35.5	1890	KM562M025J355A
	6800	18	35.5	2050	KM682M025K355A
	8200	18	35.5	2090	KM822M025K355A
35	4.7	5	11	28	KM4R7M035C110A
	6.8	5	11	36	KM6R8M035C110A
	10	5	11	46	KM100M035C110A
	22	5	11	61	KM220M035C110A
	33	5	11	75	KM330M035C110A
	47	5	11	110	KM470M035C110A
	68	6.3	11	140	KM680M035E110A
	100	6.3	11	160	KM101M035E110A
	100	8	11.5	175	KM101M035F115A
	120	8	11.5	185	KM121M035F115A
	150	8	11.5	215	KM151M035F115A
	180	8	11.5	225	KM181M035F115A
	180	10	12.5	265	KM181M035G125A
	220	8	11.5	255	KM221M035F115A
	220	10	12.5	300	KM221M035G125A
	330	10	12.5	400	KM331M035G125A
	470	10	16	520	KM471M035G160A
	560	10	20	540	KM561M035G200A
	680	10	20	560	KM681M035G200A
	680	13	20	650	KM681M035I200A
	820	13	20	760	KM821M035I200A
	1000	13	20	830	KM102M035I200A
	1200	13	20	900	KM122M035I200A
	1200	13	25	930	KM122M035I250A
	1500	13	25	960	KM152M035I250A
	1800	16	25	1150	KM182M035J250A
	2200	16	25	1290	KM222M035J250A
	2200	16	31.5	1350	KM222M035J315A
	2700	16	31.5	1480	KM272M035J315A
	3300	16	35.5	1650	KM332M035J355A
	3900	18	31.5	1820	KM392M035K315A
	4700	18	35.5	1900	KM472M035K355A
	5600	18	35.5	2000	KM562M035K355A
50	0.1	5	11	1.3	KM0R1M050C110A
	0.22	5	11	2.9	KMR22M050C110A
	0.33	5	11	4	KMR33M050C110A
	0.47	5	11	7	KMR47M050C110A
	1	5	11	13	KM010M050C110A
	2.2	5	11	20	KM2R2M050C110A

See "PACKAGING INFORMATION" to taped or formed products.

STANDARD RATINGS

Part number shows bulk version with straight leads

V_R (V)	C_R (µF)	ø D (mm)	L (mm)	I_R ▪ Max. Ripple Current +105°C ▪ 120Hz (mA rms)	CapXon Part Number
50	3.3	5	11	26	KM3R3M050C110A
	4.7	5	11	32	KM4R7M050C110A
	6.8	5	11	40	KM6R8M050C110A
	10	5	11	48	KM100M050C110A
	22	5	11	60	KM220M050C110A
	22	6.3	11	70	KM220M050E110A
	33	5	11	75	KM330M050C110A
	33	6.3	11	90	KM330M050E110A
	47	6.3	11	115	KM470M050E110A
	68	6.3	11	130	KM680M050E110A
	68	8	11.5	155	KM680M050F115A
	100	8	11.5	200	KM101M050F115A
	120	8	16	220	KM121M050F160A
	120	10	12.5	225	KM121M050G125A
	150	10	12.5	245	KM151M050G125A
	180	10	12.5	260	KM181M050G125A
	180	10	16	280	KM181M050G160A
	220	10	12.5	345	KM221M050G125A
	220	10	16	360	KM221M050G160A
	330	10	16	450	KM331M050G160A
	330	10	20	470	KM331M050G200A
	470	10	20	600	KM471M050G200A
	470	13	20	650	KM471M050I200A
	560	13	20	660	KM561M050I200A
	680	13	20	700	KM681M050I200A
	680	13	25	770	KM681M050I250A
	820	13	25	850	KM821M050I250A
	1000	13	25	890	KM102M050I250A
	1000	16	25	1000	KM102M050J250A
	1200	16	25	1150	KM122M050J250A
	1500	16	31.5	1300	KM152M050J315A
	1800	16	35.5	1480	KM182M050J355A
	2200	16	35.5	1530	KM222M050J355A
	2700	18	35.5	1590	KM272M050K355A
	3300	18	35.5	1750	KM332M050K355A
63	0.1	5	11	1.3	KM0R1M063C110A
	0.22	5	11	2.9	KMR22M063C110A
	0.33	5	11	4.5	KMR33M063C110A
	0.47	5	11	7	KMR47M063C110A
	1	5	11	13	KM010M063C110A
	2.2	5	11	20	KM2R2M063C110A
	3.3	5	11	28	KM3R3M063C110A
	4.7	5	11	32	KM4R7M063C110A
	6.8	5	11	40	KM6R8M063C110A

See "PACKAGING INFORMATION" to taped or formed products.

STANDARD RATINGS

Part number shows bulk version with straight leads

V_R (V)	C_R (µF)	ø D (mm)	L (mm)	I_R ▪ Max. Ripple Current +105°C ▪ 120Hz (mA rms)	CapXon Part Number
63	10	5	11	42	KM100M063C110A
	10	6.3	11	48	KM100M063E110A
	22	6.3	11	82	KM220M063E110A
	33	6.3	11	100	KM330M063E110A
	47	6.3	11	125	KM470M063E110A
	47	8	11.5	140	KM470M063F115A
	68	8	11.5	155	KM680M063F115A
	68	10	12.5	185	KM680M063G125A
	100	10	12.5	230	KM101M063G125A
	120	10	16	255	KM121M063G160A
	150	10	16	270	KM151M063G160A
	180	10	16	310	KM181M063G160A
	220	10	16	375	KM221M063G160A
	220	10	20	400	KM221M063G200A
	330	13	20	580	KM331M063I200A
	470	13	20	690	KM471M063I200A
	560	13	25	770	KM561M063I250A
	680	16	25	880	KM681M063J250A
	820	16	25	920	KM821M063J250A
	1000	16	31.5	1185	KM102M063J315A
	1200	16	35.5	1200	KM122M063J355A
	1500	18	31.5	1350	KM152M063K315A
100	0.1	5	11	1.9	KM0R1M100C110A
	0.22	5	11	3.4	KMR22M100C110A
	0.33	5	11	5	KMR33M100C110A
	0.47	5	11	10	KMR47M100C110A
	1	5	11	15	KM010M100C110A
	2.2	5	11	21	KM2R2M100C110A
	3.3	5	11	30	KM3R3M100C110A
	4.7	5	11	35	KM4R7M100C110A
	6.8	6.3	11	47	KM6R8M100E110A
	10	6.3	11	56	KM100M100E110A
	10	8	11.5	60	KM100M100F115A
	22	6.3	11	75	KM220M100E110A
	22	8	11.5	90	KM220M100F115A
	33	8	11.5	140	KM330M100F115A
	33	10	12.5	155	KM330M100G125A
	47	8	16	165	KM470M100F160A
	47	10	12.5	170	KM470M100G125A
	68	10	16	240	KM680M100G160A
	100	10	20	280	KM101M100G200A
	120	10	20	295	KM121M100G200A
	150	13	20	340	KM151M100I200A
	150	13	25	360	KM151M100I250A

See "PACKAGING INFORMATION" to taped or formed products.

STANDARD RATINGS

Part number shows bulk version with straight leads

V_R (V)	C_R (µF)	ø D (mm)	L (mm)	I_R ▪ Max. Ripple Current +105°C ▪ 120Hz (mA rms)	CapXon Part Number
100	180	13	20	410	KM181M100I200A
	180	13	25	480	KM181M100I250A
	220	13	25	520	KM221M100I250A
	330	16	25	690	KM331M100J250A
	470	16	25	820	KM471M100J250A
	470	16	31.5	860	KM471M100J315A
	560	16	35.5	900	KM561M100J355A
	680	16	35.5	920	KM681M100J355A
	680	18	31.5	950	KM681M100K315A
	820	18	35.5	1020	KM821M100K355A
	1000	18	40	1200	KM102M100K400A
160	0.47	5	11	11	KMR47M160C110A
	1	5	11	17	KM010M160C110A
	1	6.3	11	19	KM010M160E110A
	2.2	6.3	11	25	KM2R2M160E110A
	3.3	6.3	11	32	KM3R3M160E110A
	4.7	6.3	11	38	KM4R7M160E110A
	4.7	8	11.5	42	KM4R7M160F115A
	6.8	8	11.5	56	KM6R8M160F115A
	10	8	11.5	63	KM100M160F115A
	10	10	12.5	75	KM100M160G125A
	22	10	12.5	95	KM220M160G125A
	22	10	16	105	KM220M160G160A
	22	10	20	120	KM220M160G200A
	33	10	16	155	KM330M160G160A
	33	10	20	170	KM330M160G200A
	47	10	20	180	KM470M160G200A
	47	13	20	210	KM470M160I200A
	68	13	20	260	KM680M160I200A
	68	13	25	280	KM680M160I250A
	100	13	25	310	KM101M160I250A
	100	16	25	330	KM101M160J250A
	120	13	25	320	KM121M160I250A
	120	16	25	350	KM121M160J250A
	150	16	25	470	KM151M160J250A
	180	16	25	550	KM181M160J250A
	220	16	31.5	560	KM221M160J315A
	220	16	35.5	580	KM221M160J355A
	330	18	31.5	660	KM331M160K315A
	330	18	35.5	700	KM331M160K355A
	470	18	35.5	810	KM471M160K355A
	470	18	40	860	KM471M160K400A

See "PACKAGING INFORMATION" to taped or formed products.

STANDARD RATINGS

Part number shows bulk version with straight leads

V_R (V)	C_R (µF)	ø D (mm)	L (mm)	I_R ▪ Max. Ripple Current +105°C ▪ 120Hz (mA rms)	CapXon Part Number
200	0.47	5	11	12	KMR47M200C110A
	1	6.3	11	17	KM010M200E110A
	2.2	6.3	11	25	KM2R2M200E110A
	3.3	6.3	11	33	KM3R3M200E110A
	3.3	8	11.5	35	KM3R3M200F115A
	4.7	6.3	11	42	KM4R7M200E110A
	4.7	8	11.5	50	KM4R7M200F115A
	6.8	8	11.5	60	KM6R8M200F115A
	6.8	10	12.5	63	KM6R8M200G125A
	10	8	11.5	78	KM100M200F115A
	10	10	12.5	85	KM100M200G125A
	22	10	16	125	KM220M200G160A
	22	10	20	130	KM220M200G200A
	33	10	16	160	KM330M200G160A
	33	10	20	180	KM330M200G200A
	33	13	20	190	KM330M200I200A
	47	13	20	220	KM470M200I200A
	68	13	20	270	KM680M200I200A
	68	13	25	300	KM680M200I250A
	100	13	25	320	KM101M200I250A
	100	16	25	345	KM101M200J250A
	120	16	25	360	KM121M200J250A
	120	16	31.5	390	KM121M200J315A
	150	16	25	440	KM151M200J250A
	150	16	31.5	480	KM151M200J315A
	180	16	31.5	550	KM181M200J315A
	180	16	35.5	560	KM181M200J355A
	220	16	35.5	670	KM221M200J355A
	220	18	31.5	690	KM221M200K315A
	330	18	35.5	750	KM331M200K355A
	330	18	40	810	KM331M200K400A
	470	18	40	840	KM471M200K400A
	470	22	40	925	KM471M200M400A
	560	18	50	940	KM561M200K500A
250	0.47	5	11	8	KMR47M250C110A
	1	6.3	11	16	KM010M250E110A
	2.2	6.3	11	20	KM2R2M250E110A
	2.2	8	11.5	25	KM2R2M250F115A
	3.3	8	11.5	33	KM3R3M250F115A
	4.7	8	11.5	46	KM4R7M250F115A
	4.7	10	12.5	50	KM4R7M250G125A
	6.8	8	11.5	60	KM6R8M250F115A
	6.8	10	12.5	70	KM6R8M250G125A
	10	8	11.5	68	KM100M250F115A

See "PACKAGING INFORMATION" to taped or formed products.

STANDARD RATINGS

Part number shows bulk version with straight leads

V_R (V)	C_R (µF)	ø D (mm)	L (mm)	I_R ▪ Max. Ripple Current +105°C ▪ 120Hz (mA rms)	CapXon Part Number
250	10	10	12.5	80	KM100M250G125A
	22	10	16	110	KM220M250G160A
	22	10	20	125	KM220M250G200A
	22	13	20	150	KM220M250I200A
	33	13	20	190	KM330M250I200A
	47	13	20	230	KM470M250I200A
	47	13	25	240	KM470M250I250A
	56	13	20	255	KM560M250I200A
	56	13	25	280	KM560M250I250A
	68	13	25	310	KM680M250I250A
	68	16	25	355	KM680M250J250A
	82	16	25	370	KM820M250J250A
	100	16	25	375	KM101M250J250A
	100	16	31.5	395	KM101M250J315A
	120	16	31.5	420	KM121M250J315A
	120	16	35.5	430	KM121M250J355A
	150	16	35.5	460	KM151M250J355A
	150	18	31.5	460	KM151M250K315A
	180	18	31.5	465	KM181M250K315A
	180	18	35.5	470	KM181M250K355A
	220	18	35.5	650	KM221M250K355A
	220	18	40	700	KM221M250K400A
	330	18	45	720	KM331M250K450A
	330	22	40	780	KM331M250M400A
350	0.47	6.3	11	13	KMR47M350E110A
	1	6.3	11	16	KM010M350E110A
	2.2	8	11.5	31	KM2R2M350F115A
	3.3	8	11.5	34	KM3R3M350F115A
	3.3	10	12.5	38	KM3R3M350G125A
	4.7	8	11.5	47	KM4R7M350F115A
	4.7	10	12.5	52	KM4R7M350G125A
	6.8	10	12.5	79	KM6R8M350G125A
	10	10	16	87	KM100M350G160A
	10	10	20	92	KM100M350G200A
	22	13	20	160	KM220M350I200A
	22	13	25	170	KM220M350I250A
	33	13	20	180	KM330M350I200A
	33	13	25	200	KM330M350I250A
	47	16	25	245	KM470M350J250A
	47	16	31.5	260	KM470M350J315A
	56	16	25	330	KM560M350J250A
	68	16	31.5	370	KM680M350J315A
	82	16	35.5	385	KM820M350J355A
	100	18	31.5	390	KM101M350K315A

See "PACKAGING INFORMATION" to taped or formed products.

STANDARD RATINGS

Part number shows bulk version with straight leads

V_R (V)	C_R (µF)	ø D (mm)	L (mm)	I_R ▪ Max. Ripple Current +105°C ▪ 120Hz (mA rms)	CapXon Part Number
350	120	16	40	400	KM121M350J400A
	120	18	35.5	400	KM121M350K355A
	150	18	40	420	KM151M350K400A
	180	18	40	430	KM181M350K400A
	220	22	40	500	KM221M350M400A
400	0.47	6.3	11	14	KMR47M400E110A
	1	6.3	11	17	KM010M400E110A
	2.2	6.3	15	34	KM2R2M400E150A
	2.2	8	11.5	35	KM2R2M400F115A
	2.2	10	12.5	40	KM2R2M400G125A
	3.3	6.3	15	35	KM3R3M400E150A
	3.3	8	11.5	36	KM3R3M400F115A
	3.3	8	16	40	KM3R3M400F160A
	3.3	10	12.5	41	KM3R3M400G125A
	4.7	8	11.5	48	KM4R7M400F115A
	4.7	8	16	54	KM4R7M400F160A
	4.7	10	12.5	55	KM4R7M400G125A
	4.7	10	16	65	KM4R7M400G160A
	6.8	8	14	75	KM6R8M400F140A
	6.8	8	15	77	KM6R8M400F150A
	6.8	8	16	80	KM6R8M400F160A
	6.8	10	12.5	82	KM6R8M400G125A
	6.8	10	16	90	KM6R8M400G160A
	10	10	14	104	KM100M400G140A
	10	10	15	107	KM100M400G150A
	10	10	16	110	KM100M400G160A
	10	10	20	125	KM100M400G200A
	22	10	25	162	KM220M400G250A
	22	13	20	170	KM220M400I200A
	22	13	25	190	KM220M400I250A
	33	13	20	235	KM330M400I200A
	33	13	25	260	KM330M400I250A
	33	16	25	290	KM330M400J250A
	47	16	25	300	KM470M400J250A
	47	16	31.5	360	KM470M400J315A
	47	18	25	320	KM470M400K250A
	56	16	25	360	KM560M400J250A
	56	16	31.5	400	KM560M400J315A
	68	16	25	410	KM680M400J250A
	68	16	31.5	450	KM680M400J315A
	68	16	35.5	480	KM680M400J355A
	68	18	25	440	KM680M400K250A
	68	18	31.5	500	KM680M400K315A
	82	16	31.5	480	KM820M400J315A

See "PACKAGING INFORMATION" to taped or formed products.

STANDARD RATINGS

Part number shows bulk version with straight leads

V_R (V)	C_R (µF)	ø D (mm)	L (mm)	I_R ▪ Max. Ripple Current +105°C ▪ 120Hz (mA rms)	CapXon Part Number
400	82	18	25	470	KM820M400K250A
	82	18	31.5	520	KM820M400K315A
	100	16	35.5	520	KM101M400J355A
	100	18	31.5	530	KM101M400K315A
	100	18	35.5	550	KM101M400K355A
	120	18	31.5	550	KM121M400K315A
	120	18	35.5	580	KM121M400K355A
	150	18	35.5	610	KM151M400K355A
	150	18	40	650	KM151M400K400A
	150	22	30	640	KM151M400M300A
	180	18	45	700	KM181M400K450A
420	0.47	6.3	11	14	KMR47M420E110A
	1	8	11.5	20	KM010M420F115A
	2.2	8	11.5	35	KM2R2M420F115A
	3.3	10	12.5	42	KM3R3M420G125A
	4.7	10	12.5	58	KM4R7M420G125A
	4.7	10	16	61	KM4R7M420G160A
	6.8	10	16	84	KM6R8M420G160A
	10	10	20	112	KM100M420G200A
	22	13	25	185	KM220M420I250A
	33	16	25	230	KM330M420J250A
	47	16	25	280	KM470M420J250A
	47	16	31.5	310	KM470M420J315A
	56	16	35.5	390	KM560M420J355A
	68	18	31.5	470	KM680M420K315A
	82	18	31.5	475	KM820M420K315A
	82	18	35.5	500	KM820M420K355A
	100	16	35.5	525	KM101M420J355A
	100	18	31.5	535	KM101M420K315A
	100	18	35.5	555	KM101M420K355A
	120	18	31.5	560	KM121M420K315A
	120	18	35.5	590	KM121M420K355A
	120	18	40	630	KM121M420K400A
	150	18	35.5	615	KM151M420K355A
	150	18	40	660	KM151M420K400A
	180	18	45	680	KM181M420K450A
	180	20	40	685	KM181M420L400A
450	0.47	6.3	11	14	KMR47M450E110A
	1	8	11.5	20	KM010M450F115A
	2.2	8	11.5	30	KM2R2M450F115A
	2.2	10	12.5	35	KM2R2M450G125A
	3.3	8	11.5	32	KM3R3M450F115A
	3.3	10	12.5	38	KM3R3M450G125A
	3.3	10	16	42	KM3R3M450G160A

See "PACKAGING INFORMATION" to taped or formed products.

STANDARD RATINGS

Part number shows bulk version with straight leads

V_R (V)	C_R (µF)	ø D (mm)	L (mm)	I_R ▪ Max. Ripple Current +105°C ▪ 120Hz (mA rms)	CapXon Part Number
450	4.7	8	16	44	KM4R7M450F160A
	4.7	10	16	50	KM4R7M450G160A
	4.7	10	12.5	45	KM4R7M450G125A
	6.8	10	12.5	58	KM6R8M450G125A
	6.8	10	16	65	KM6R8M450G160A
	6.8	10	20	72	KM6R8M450G200A
	10	10	16	80	KM100M450G160A
	10	10	20	92	KM100M450G200A
	10	13	20	98	KM100M450I200A
	22	13	20	165	KM220M450I200A
	22	13	25	180	KM220M450I250A
	22	16	25	200	KM220M450J250A
	33	13	25	185	KM330M450I250A
	33	16	25	210	KM330M450J250A
	33	16	31.5	230	KM330M450J315A
	47	16	25	305	KM470M450J250A
	47	16	31.5	340	KM470M450J315A
	47	16	35.5	380	KM470M450J355A
	47	18	25	350	KM470M450K250A
	47	18	31.5	360	KM470M450K315A
	56	16	31.5	370	KM560M450J315A
	56	16	35.5	400	KM560M450J355A
	56	18	25	370	KM560M450K250A
	68	16	31.5	425	KM680M450J315A
	68	16	35.5	450	KM680M450J355A
	68	18	25	410	KM680M450K250A
	68	18	31.5	460	KM680M450K315A
	68	18	35.5	470	KM680M450K355A
	82	18	31.5	465	KM820M450K315A
	82	18	35.5	480	KM820M450K355A
	100	18	31.5	500	KM101M450K315A
	100	18	35.5	525	KM101M450K355A
	100	18	40	560	KM101M450K400A
	120	18	40	580	KM121M450K400A
	120	20	35	580	KM121M450L350A
	120	22	40	650	KM121M450M400A
	150	18	45	690	KM151M450K450A
	150	20	40	695	KM151M450L400A
	150	22	35	695	KM151M450M350A
	150	22	40	720	KM151M450M400A

See “PACKAGING INFORMATION” to taped or formed products.

STANDARD RATINGS

Part number shows bulk version with straight leads

V_R (V)	C_R (µF)	ø D (mm)	L (mm)	I_R ▪ Max. Ripple Current +105°C ▪ 120Hz (mA rms)	CapXon Part Number
500	1	8	11.5	20	KM010M500F115A
	1	8	16	23	KM010M500F160A
	1	10	12.5	24	KM010M500G125A
	2.2	8	16	32	KM2R2M500F160A
	2.2	10	12.5	33	KM2R2M500G125A
	2.2	10	16	36	KM2R2M500G160A
	3.3	10	12.5	38	KM3R3M500G125A
	3.3	10	16	42	KM3R3M500G160A
	3.3	10	20	49	KM3R3M500G200A
	4.7	10	16	50	KM4R7M500G160A
	4.7	10	20	58	KM4R7M500G200A
	6.8	10	16	63	KM6R8M500G160A
	6.8	10	20	70	KM6R8M500G200A
	6.8	13	20	80	KM6R8M500I200A
	10	10	20	90	KM100M500G200A
	10	13	20	98	KM100M500I200A
	10	13	25	115	KM100M500I250A
	22	13	25	160	KM220M500I250A
	22	16	25	180	KM220M500J250A
	33	16	31.5	230	KM330M500J315A
	33	18	25	220	KM330M500K250A
	47	16	35.5	360	KM470M500J355A
	47	18	25	330	KM470M500K250A
	47	18	31.5	360	KM470M500K315A
	56	16	35.5	390	KM560M500J355A
	56	16	40	420	KM560M500J400A
	56	18	31.5	400	KM560M500K315A
	68	16	45	480	KM680M500J450A
	68	18	35.5	460	KM680M500K355A
	68	18	40	490	KM680M500K400A
	82	16	45	490	KM820M500J450A
	82	18	35.5	470	KM820M500K355A
	82	18	40	500	KM820M500K400A
	100	18	40	550	KM101M500K400A
	100	18	45	570	KM101M500K450A
	100	20	40	580	KM101M500L400A
	120	20	45	600	KM121M500L450A
	150	22	45	750	KM151M500M450A

See "PACKAGING INFORMATION" to taped or formed products.

DIMENSIONS ▪ All dimensions in mm

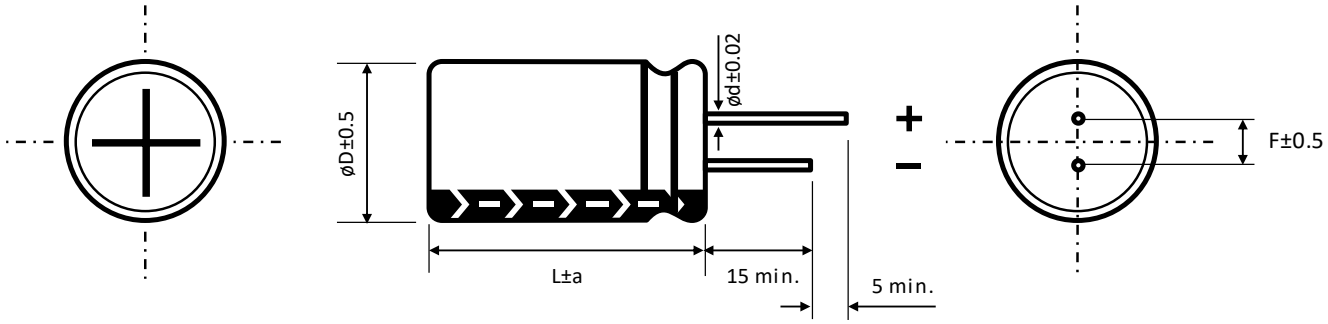

ø D	5	6.3	8		10	13	16	18	22
F	2	2.5	3.5		5	5	7.5	7.5	10
ø d	0.5		L < 20	L ≥ 20	0.6		0.8		
			0.5	0.6					

a	ø D < 16	ø D = 16		ø D = 18		ø D > 18
	1.5	L = 25 to 35.5	L < 25 and L ≥ 40	L = 25 to 31.5	L < 25 and L ≥ 35.5	2
		1.5	2	1.5	2	

MULTIPLIER K_f for RIPPLE CURRENT vs. FREQUENCY

C_R (µF) / Frequency (Hz)	50/60	100/120	400	1k	10k	50k - 100k
$C_R \leq 10$	0.8	1	1.3	1.45	1.65	1.7
$10 < C_R \leq 100$	0.8	1	1.23	1.36	1.48	1.53
$100 < C_R \leq 1000$	0.8	1	1.16	1.25	1.35	1.38
$1000 \leq C_R$	0.8	1	1.11	1.17	1.25	1.28

PRECAUTIONS, GUIDELINES AND PACKAGING INFORMATON

Unless otherwise agreed in individual specifications, all products are subject to our “General Precautions and Guidelines” as well as our “Packaging Information”. Please refer to the following links in the table.

General Precautions and Guidelines	Packaging Information Liquid Radial
Page 837	Page 336

For further information please contact sales@capxon.org

DISCLAIMER

All product related data (e.g. specification, statements and general information) are subject to change without any notice. It is necessary that the customer observes all product related technical / application information and handling instructions.

CapXon products are designed and manufactured according to severe quality and safety standards. Under no circumstance, CapXon warrants that any CapXon product is suitable for the purposes intended for your application, even CapXon knows the application. It is customer's duty and obligation to check and make sure that CapXon products are suitable for the purposes intended and select the correct and proper CapXon product. Customers are requested to perform a sufficient validation and reliability evaluation to assure needed safety level and reliability performance by suitable designs and to apply proper safeguards (e.g. redundancies, protective circuits).

Particular operating conditions (ambient temperature, ripple current, voltage, thermal resistance, etc.) as well as storage, production or assembly may affect the performance and the lifetime of the capacitor. Please consult CapXon for lifetime estimation, failure mode considerations or worst-case scenarios according to the product technology, product tolerances / deviations or change of the characteristics of the capacitor due to shipment, storage, handling, production and usage.

For aerospace or military application, life-saving, life-sustaining, safety critical applications or any application where failure may cause severe personal injury or death, please consult us before design-in the capacitor in your application.

Except for the written expressed warranties, CapXon does not impliedly, by assumption or whatever else, warrant, undertake, promise any other warranty or guaranty for any CapXon product.

For further information, please visit our website www.capxongroup.com or contact CapXon directly.

NK SERIES ▪ BI-POLAR 105°C TYPE



KEY FEATURES

BI-POLAR

- **ALUMINUM ELECTROLYTIC CAPACITOR** ▪ THT type
- Endurance: 105°C ▪ 2000 hours
- Bi-Polar, Non-polarized type
- Excellent frequency characteristics
- Minimal capacitance deviation

HF Halogen Free

RoHS & REACH COMPLIANT

SPECIFICATIONS

Items		Performance Characteristics						
Operating Temperature Range		-40 ~ +105°C				-25 ~ +105°C		
Rated Voltage Range	V_R	6.3 ~ 100V DC				160 ~ 250V DC		
Surge Voltage	V_S	$V_S = 1.15 \cdot V_R$						
Capacitance Range	C_R	0.47 ~ 3300µF				0.47 ~ 47µF		
Cap. Tolerance	ΔC	±20% (120Hz ▪ 20°C)						
Leakage Current (20°C ▪ V_R applied)	I_{LEAK}	≤ $0.03 \cdot C_R \cdot V_R$ or 3µA, whichever is greater ▪ After 1 minute [I_{LEAK} (µA) ; C_R (µF) ; V_R (V)]						
Dissipation Factor % (20°C ▪ 120Hz)	tanδ	V_R (V DC)	6.3	10	16	25	35	50
		tanδ (%)	25	25	20	15	15	13
		V_R (V DC)	63	100	160	200	250	
		tanδ (%)	10	10	15	15	20	
		For C_R ≥ 1000µF, add 2% per every multiple 1000µF of rated capacitance value						
Low Temperature Characteristics at 120Hz	Z ratio max.	V_R (V DC)	6.3	10	16	25	35	50
		Z-25°C/Z+20°C	4	3	2	2	2	2
		Z-40°C/Z+20°C	8	6	4	3	3	3
		V_R (V DC)	63	100	160	200	250	
		Z-25°C/Z+20°C	2	2	2	2	3	
		Z-40°C/Z+20°C	3	3	-	-	-	
		For capacitance > 1000µF						
		Z-25°C/Z+20°C	Add 0.5 for every multiple 1000µF of rated capacitance value					
		Z-40°C/Z+20°C	Add 1 for every multiple 1000µF of rated capacitance value					

Lifetime Test		
Endurance 105°C (V_R applied)	Test	**2000 hours**
	ΔC/C_R	≤ ±20% of initial measured value
	tanδ	≤ 150% of initial specified value
	I_{Leak}	≤ the initial specified value
Shelf Life 105°C (V_R = 0)	Test	**1000 hours**
	ΔC/C_R	≤ ±20% of initial measured value
	tanδ	≤ 150% of initial specified value
	I_{Leak}	≤ the initial specified value
	Before measurement: Restore capacitor to 20°C, apply V_R for 30 min according JIS-C-5101-4	

For further information please contact sales@capxon.org

STANDARD RATINGS

Part number shows bulk version with straight leads

V_R (V)	C_R (µF)	ø D (mm)	L (mm)	I_R ▪ Max. Ripple Current +105°C ▪ 120Hz (mA rms)	CapXon Part Number
6.3	100	5	11	99	NK101M6R3C110A
	220	8	11.5	149	NK221M6R3F115A
	330	8	11.5	190	NK331M6R3F115A
	470	10	12.5	280	NK471M6R3G125A
	1000	10	16	352	NK102M6R3G160A
	2200	13	20	645	NK222M6R3I200A
	3300	16	25	950	NK332M6R3J250A
10	33	5	11	59	NK330M010C110A
	47	5	11	79	NK470M010C110A
	100	6.3	11	99	NK101M010E110A
	220	8	11.5	157	NK221M010F115A
	330	10	12.5	235	NK331M010G125A
	470	10	12.5	290	NK471M010G125A
	1000	10	20	430	NK102M010G200A
	2200	16	25	830	NK222M010J250A
	3300	16	31.5	1150	NK332M010J315A
16	22	5	11	53	NK220M016C110A
	33	5	11	62	NK330M016C110A
	47	6.3	11	90	NK470M016E110A
	100	6.3	11	99	NK101M016E110A
	100	8	11.5	123	NK101M016F115A
	220	8	11.5	200	NK221M016F115A
	220	10	12.5	234	NK221M016G125A
	330	10	12.5	255	NK331M016G125A
	470	10	16	360	NK471M016G160A
	1000	13	20	511	NK102M016I200A
	2200	16	31.5	950	NK222M016J315A
25	10	5	11	34	NK100M025C110A
	22	6.3	11	55	NK220M025E110A
	33	6.3	11	72	NK330M025E110A
	47	6.3	11	96	NK470M025E110A
	100	8	11.5	152	NK101M025F115A
	220	10	12.5	245	NK221M025G125A
	330	10	16	310	NK331M025G160A
	470	13	20	420	NK471M025I200A
35	10	5	11	38	NK100M035C110A
	22	6.3	11	65	NK220M035E110A
	33	8	11.5	75	NK330M035F115A
	47	8	11.5	107	NK470M035F115A
	100	10	12.5	198	NK101M035G125A
	220	10	20	320	NK221M035G200A
	330	13	20	370	NK331M035I200A
	470	13	25	495	NK471M035I250A

See "PACKAGING INFORMATION" to taped or formed products.

STANDARD RATINGS

Part number shows bulk version with straight leads

V_R (V)	C_R (µF)	ø D (mm)	L (mm)	I_R ▪ Max. Ripple Current +105°C ▪ 120Hz (mA rms)	CapXon Part Number
50	0.47	5	11	8	NKR47M050C110A
	1	5	11	12	NK010M050C110A
	2.2	5	11	17	NK2R2M050C110A
	3.3	5	11	23	NK3R3M050C110A
	4.7	5	11	30	NK4R7M050C110A
	10	6.3	11	50	NK100M050E110A
	22	8	11.5	85	NK220M050F115A
	33	8	11.5	89	NK330M050F115A
	47	10	12.5	123	NK470M050G125A
	100	10	16	198	NK101M050G160A
	100	10	20	220	NK101M050G200A
	220	13	20	340	NK221M050I200A
	220	13	25	375	NK221M050I250A
	330	16	25	500	NK331M050J250A
63	0.47	5	11	9	NKR47M063C110A
	1	5	11	14	NK010M063C110A
	2.2	5	11	20	NK2R2M063C110A
	3.3	6.3	11	25	NK3R3M063E110A
	4.7	6.3	11	30	NK4R7M063E110A
	10	6.3	11	52	NK100M063E110A
	22	8	11.5	88	NK220M063F115A
	22	10	12.5	92	NK220M063G125A
	33	10	12.5	115	NK330M063G125A
	47	10	16	150	NK470M063G160A
	100	13	20	295	NK101M063I200A
	220	13	25	420	NK221M063I250A
100	0.47	5	11	10	NKR47M100C110A
	1	5	11	15	NK010M100C110A
	2.2	5	11	20	NK2R2M100C110A
	2.2	6.3	11	22	NK2R2M100E110A
	3.3	6.3	11	28	NK3R3M100E110A
	4.7	6.3	11	32	NK4R7M100E110A
	4.7	8	11.5	36	NK4R7M100F115A
	10	8	11.5	52	NK100M100F115A
	10	10	12.5	55	NK100M100G125A
	22	10	16	120	NK220M100G160A
	33	10	20	175	NK330M100G200A
	47	13	20	187	NK470M100I200A
	100	16	25	399	NK101M100J250A
160	0.47	5	11	12	NKR47M160C110A
	1	6.3	11	18	NK010M160E110A
	2.2	8	11.5	28	NK2R2M160F115A
	3.3	8	11.5	37	NK3R3M160F115A
	4.7	10	12.5	45	NK4R7M160G125A

See "PACKAGING INFORMATION" to taped or formed products.

For further information please contact sales@capxon.org

STANDARD RATINGS

Part number shows bulk version with straight leads

V_R (V)	C_R (µF)	ø D (mm)	L (mm)	I_R ▪ Max. Ripple Current +105°C ▪ 120Hz (mA rms)	CapXon Part Number
160	10	10	16	79	NK100M160G160A
	22	13	20	140	NK220M160I200A
	33	13	20	200	NK330M160I200A
	47	13	25	215	NK470M160I250A
200	0.47	6.3	11	17	NKR47M200E110A
	1	8	11.5	21	NK010M200F115A
	2.2	8	11.5	32	NK2R2M200F115A
	3.3	10	12.5	40	NK3R3M200G125A
	4.7	10	16	52	NK4R7M200G160A
	10	10	20	86	NK100M200G200A
	22	13	20	160	NK220M200I200A
	33	13	25	213	NK330M200I250A
250	0.47	6.3	11	22	NKR47M250E110A
	1	8	11.5	25	NK010M250F115A
	2.2	10	12.5	39	NK2R2M250G125A
	3.3	10	16	43	NK3R3M250G160A
	4.7	10	20	65	NK4R7M250G200A
	10	10	20	109	NK100M250G200A
	22	13	25	189	NK220M250I250A
	33	16	25	250	NK330M250J250A

Part number shows bulk version with straight leads. See "PACKAGING INFORMATION" to taped or formed products.

DIMENSIONS ▪ All dimensions in mm

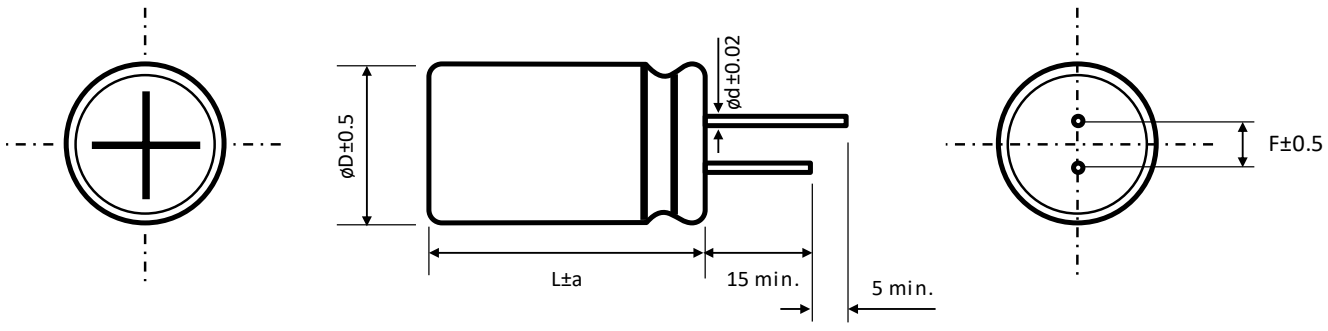

ø D	5	6.3	8	10	13	16
F	2	2.5	3.5	5	5	7.5
ø d	0.5			0.6		0.8
a	1.5			1.5		1.5

For further information please contact sales@capxon.org

MULTIPLIER K_f for RIPPLE CURRENT vs. FREQUENCY

C_R (µF) / Frequency (Hz)	50/60	100/120	400	1k	10k	50k - 100k
$C_R \leq 10$	0.8	1	1.3	1.45	1.65	1.7
$10 < C_R \leq 100$	0.8	1	1.23	1.36	1.48	1.53
$100 < C_R \leq 1000$	0.8	1	1.16	1.25	1.35	1.38
$1000 \leq C_R$	0.8	1	1.11	1.17	1.25	1.28

PRECAUTIONS, GUIDELINES AND PACKAGING INFORMATON

Unless otherwise agreed in individual specifications, all products are subject to our “General Precautions and Guidelines” as well as our “Packaging Information”. Please refer to the following links in the table.

General Precautions and Guidelines	Packaging Information Liquid Radial
Page 837	Page 336

DISCLAIMER

All product related data (e.g. specification, statements and general information) are subject to change without any notice. It is necessary that the customer observes all product related technical / application information and handling instructions.

CapXon products are designed and manufactured according to severe quality and safety standards. Under no circumstance, CapXon warrants that any CapXon product is suitable for the purposes intended for your application, even CapXon knows the application. It is customer's duty and obligation to check and make sure that CapXon products are suitable for the purposes intended and select the correct and proper CapXon product. Customers are requested to perform a sufficient validation and reliability evaluation to assure needed safety level and reliability performance by suitable designs and to apply proper safeguards (e.g. redundancies, protective circuits).

Particular operating conditions (ambient temperature, ripple current, voltage, thermal resistance, etc.) as well as storage, production or assembly may affect the performance and the lifetime of the capacitor. Please consult CapXon for lifetime estimation, failure mode considerations or worst-case scenarios according to the product technology, product tolerances / deviations or change of the characteristics of the capacitor due to shipment, storage, handling, production and usage.

For aerospace or military application, life-saving, life-sustaining, safety critical applications or any application where failure may cause severe personal injury or death, please consult us before design-in the capacitor in your application.

Except for the written expressed warranties, CapXon does not impliedly, by assumption or whatever else, warrant, undertake, promise any other warranty or guaranty for any CapXon product.

For further information, please visit our website www.capxongroup.com or contact CapXon directly.

SJ SERIES ▪ 7MM HEIGHT 105°C TYPE



KEY FEATURES

LOW HEIGHT

- **ALUMINUM ELECTROLYTIC CAPACITOR** ▪ THT type
- Endurance: 105°C ▪ 2000 hours
- Miniaturized for space critical applications
- Low height ▪ 7mm
- Low voltage version

HF Halogen Free

RoHS & REACH COMPLIANT

SPECIFICATIONS

Items		Performance Characteristics							
Operating Temperature Range		-40 ~ +105°C							
Rated Voltage Range	V_R	6.3 ~ 63V DC							
Surge Voltage	V_S	$V_S = 1.15 \cdot V_R$							
Capacitance Range	C_R	0.1 ~ 220µF							
Cap. Tolerance	ΔC	±20% (120Hz ▪ 20°C)							
Leakage Current (20°C ▪ V_R applied)	I_{LEAK}	≤ $0.01 \cdot C_R \cdot V_R$ or 3µA, whichever is greater ▪ After 2 minutes [I_{LEAK} (µA) ; C_R (µF) ; V_R (V)]							
Dissipation Factor % (20°C ▪ 120Hz)	tanδ	V_R (V DC)	6.3	10	16	25	35	50	63
		tanδ (%)	22	20	16	14	12	10	9
Low Temperature Characteristics at 120Hz	Z ratio max.	V_R (V DC)	6.3	10	16	25	35	50	63
		Z-25°C/Z+20°C	4	3	2	2	2	2	2
		Z-40°C/Z+20°C	8	6	4	4	3	3	3

Lifetime Test		
Endurance 105°C (V_R applied)	Test	**2000 hours**
	△C/C_R	≤ ±20% of initial measured value
	tanδ	≤ 200% of initial specified value
	I_{Leak}	≤ the initial specified value
Shelf Life 105°C (V_R = 0)	Test	**1000 hours**
	△C/C_R	≤ ±20% of initial measured value
	tanδ	≤ 200% of initial specified value
	I_{Leak}	≤ the initial specified value
	Before measurement: Restore capacitor to 20°C, apply V_R for 30 min according JIS-C-5101-4	

MULTIPLIER K_f for RIPPLE CURRENT vs. FREQUENCY

C_R (µF) / Frequency (Hz)	50/60	100/120	400	1k	10k	50k - 100k
$C_R \leq 10$	0.8	1	1.3	1.45	1.65	1.7
$10 < C_R \leq 220$	0.8	1	1.23	1.36	1.48	1.53

For further information please contact sales@capxon.org

STANDARD RATINGS

Part number shows bulk version with straight leads

V_R (V)	C_R (µF)	ø D (mm)	L (mm)	I_R ▪ Max. Ripple Current +105°C ▪ 120Hz (mA rms)	CapXon Part Number
6.3	22	4	7	28	SJ220M6R3B070A
	33	4	7	32	SJ330M6R3B070A
	33	5	7	35	SJ330M6R3C070A
	47	5	7	47	SJ470M6R3C070A
	68	5	7	50	SJ680M6R3C070A
	100	6.3	7	75	SJ101M6R3E070A
	220	8	7	92	SJ221M6R3F070A
10	15	4	7	26	SJ150M010B070A
	22	4	7	32	SJ220M010B070A
	33	5	7	48	SJ330M010C070A
	47	5	7	51	SJ470M010C070A
	68	6.3	7	68	SJ680M010E070A
	100	6.3	7	80	SJ101M010E070A
	100	8	7	95	SJ101M010F070A
	220	8	7	130	SJ221M010F070A
16	6.8	4	7	19	SJ6R8M016B070A
	10	4	7	28	SJ100M016B070A
	15	4	7	30	SJ150M016B070A
	22	4	7	35	SJ220M016B070A
	22	5	7	42	SJ220M016C070A
	33	5	7	50	SJ330M016C070A
	47	6.3	7	67	SJ470M016E070A
	68	6.3	7	70	SJ680M016E070A
	68	8	7	78	SJ680M016F070A
	100	8	7	110	SJ101M016F070A
25	4.7	4	7	17	SJ4R7M025B070A
	6.8	4	7	19	SJ6R8M025B070A
	10	4	7	28	SJ100M025B070A
	10	5	7	33	SJ100M025C070A
	15	5	7	35	SJ150M025C070A
	22	5	7	43	SJ220M025C070A
	22	6.3	7	45	SJ220M025E070A
	33	6.3	7	62	SJ330M025E070A
	47	8	7	75	SJ470M025F070A
	68	8	7	80	SJ680M025F070A
	100	8	7	115	SJ101M025F070A
35	4.7	4	7	22	SJ4R7M035B070A
	6.8	4	7	24	SJ6R8M035B070A
	6.8	5	7	28	SJ6R8M035C070A
	10	5	7	35	SJ100M035C070A
	15	5	7	38	SJ150M035C070A
	15	6.3	7	45	SJ150M035E070A
	22	6.3	7	60	SJ220M035E070A
	33	6.3	7	50	SJ330M035E070A

See "PACKAGING INFORMATION" to taped or formed products.

STANDARD RATINGS

Part number shows bulk version with straight leads

V_R (V)	C_R (µF)	ø D (mm)	L (mm)	I_R ▪ Max. Ripple Current +105°C ▪ 120Hz (mA rms)	CapXon Part Number
35	33	8	7	68	SJ330M035F070A
	47	8	7	80	SJ470M035F070A
	68	8	7	85	SJ680M035F070A
50	0.1	4	7	1.5	SJ0R1M050B070A
	0.15	4	7	1.8	SJR15M050B070A
	0.22	4	7	2.5	SJR22M050B070A
	0.33	4	7	3.5	SJR33M050B070A
	0.47	4	7	5	SJR47M050B070A
	0.68	4	7	7	SJR68M050B070A
	1	4	7	10	SJ010M050B070A
	1.5	4	7	13	SJ1R5M050B070A
	2.2	4	7	20	SJ2R2M050B070A
	3.3	4	7	26	SJ3R3M050B070A
	4.7	4	7	27	SJ4R7M050B070A
	4.7	5	7	29	SJ4R7M050C070A
	6.8	5	7	32	SJ6R8M050C070A
	6.8	6.3	7	33	SJ6R8M050E070A
	10	6.3	7	38	SJ100M050E070A
	15	6.3	7	52	SJ150M050E070A
	22	8	7	63	SJ220M050F070A
	33	8	7	78	SJ330M050F070A
63	0.1	4	7	1.5	SJ0R1M063B070A
	0.15	4	7	1.8	SJR15M063B070A
	0.22	4	7	2.5	SJR22M063B070A
	0.33	4	7	3.5	SJR33M063B070A
	0.47	4	7	6	SJR47M063B070A
	0.68	4	7	7	SJR68M063B070A
	1	4	7	12	SJ010M063B070A
	1.5	4	7	14	SJ1R5M063B070A
	2.2	4	7	20	SJ2R2M063B070A
	3.3	5	7	28	SJ3R3M063C070A
	4.7	5	7	29	SJ4R7M063C070A
	4.7	6.3	7	33	SJ4R7M063E070A
	6.8	6.3	7	35	SJ6R8M063E070A
	10	6.3	7	40	SJ100M063E070A
	15	8	7	55	SJ150M063F070A
	22	8	7	65	SJ220M063F070A

See "PACKAGING INFORMATION" to taped or formed products.

DIMENSIONS ▪ All dimensions in mm

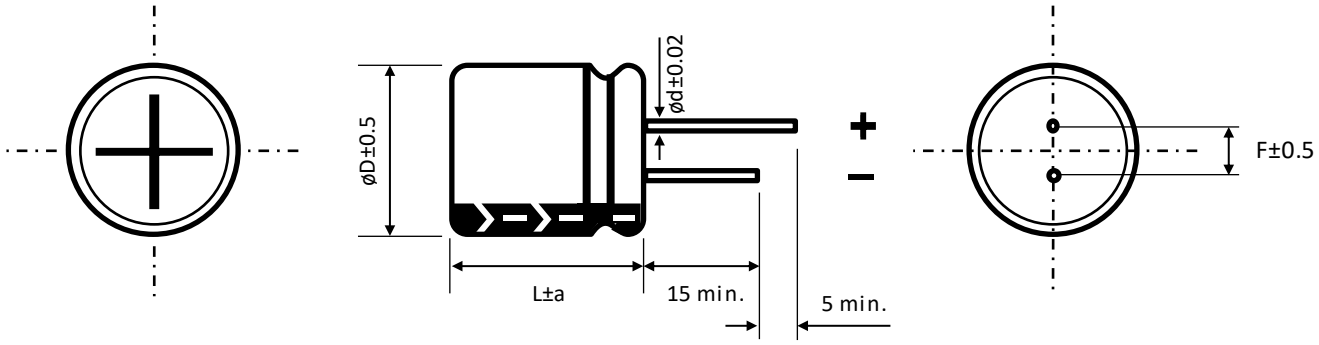

ø D	4	5	6.3	8
F	1.5	2	2.5	3.5
ø d	0.45	0.45	0.5	0.5
a	1	1	1	1

PRECAUTIONS, GUIDELINES AND PACKAGING INFORMATON

Unless otherwise agreed in individual specifications, all products are subject to our “General Precautions and Guidelines” as well as our “Packaging Information”. Please refer to the following links in the table.

General Precautions and Guidelines	Packaging Information Liquid Radial
Page 837	Page 336

DISCLAIMER

All product related data (e.g. specification, statements and general information) are subject to change without any notice. It is necessary that the customer observes all product related technical / application information and handling instructions.

CapXon products are designed and manufactured according to severe quality and safety standards. Under no circumstance, CapXon warrants that any CapXon product is suitable for the purposes intended for your application, even CapXon knows the application. It is customer's duty and obligation to check and make sure that CapXon products are suitable for the purposes intended and select the correct and proper CapXon product. Customers are requested to perform a sufficient validation and reliability evaluation to assure needed safety level and reliability performance by suitable designs and to apply proper safeguards (e.g. redundancies, protective circuits).

Particular operating conditions (ambient temperature, ripple current, voltage, thermal resistance, etc.) as well as storage, production or assembly may affect the performance and the lifetime of the capacitor. Please consult CapXon for lifetime estimation, failure mode considerations or worst-case scenarios according to the product technology, product tolerances / deviations or change of the characteristics of the capacitor due to shipment, storage, handling, production and usage.

For aerospace or military application, life-saving, life-sustaining, safety critical applications or any application where failure may cause severe personal injury or death, please consult us before design-in the capacitor in your application.

Except for the written expressed warranties, CapXon does not impliedly, by assumption or whatever else, warrant, undertake, promise any other warranty or guaranty for any CapXon product.

For further information, please visit our website www.capxongroup.com or contact CapXon directly.

LL SERIES ▪ LOW LEAKAGE CURRENT 105°C TYPE



KEY FEATURES

LOW LEAKAGE

- **ALUMINUM ELECTROLYTIC CAPACITOR** ▪ THT type
- Endurance: 105°C ▪ 2000 hours
- Low leakage current, $I_{LEAK} \le 0.002 \cdot C_R \cdot V_R$ or 0.4 (µA)
- Extremely stable leakage current characteristic
- Capacitance tolerance ± 10% on request

HF Halogen Free

RoHS & REACH COMPLIANT

SPECIFICATIONS

Items		Performance Characteristics							
Operating Temperature Range		-40 ~ +105°C							
Rated Voltage Range	V_R	6.3 ~ 63V DC							
Surge Voltage	V_S	$V_S = 1.15 \cdot V_R$							
Capacitance Range	C_R	0.1 ~ 2200µF							
Cap. Tolerance	ΔC	±20% (120Hz ▪ 20°C)							
Leakage Current (20°C ▪ V_R applied)	I_{LEAK}	≤ $0.002 \cdot C_R \cdot V_R$ or 0.4µA, whichever is greater ▪ After 3 minutes [I_{LEAK} (µA) ; C_R (µF) ; V_R (V)]							
Dissipation Factor % (20°C ▪ 120Hz)	tanδ	V_R (V DC)	6.3	10	16	25	35	50	63
		tanδ (%)	20	17	13	10	9	8	8
		For $C_R \ge 1000$µF, add 2% per every multiple 1000µF of rated capacitance value							
Low Temperature Characteristics at 120Hz	Z ratio max.	V_R (V DC)	6.3	10	16	25	35	50	63
		Z-25°C/Z+20°C	3	2	2	2	2	2	2
		Z-40°C/Z+20°C	4	3	3	2	2	2	2
		For capacitance > 1000µF							
		Z-25°C/Z+20°C	Add 0.5 for every multiple 1000µF of rated capacitance value						
		Z-40°C/Z+20°C	Add 1 for every multiple 1000µF of rated capacitance value						

Lifetime Test		
Endurance 105°C (V_R & I_R applied)	Test	**2000 hours**
	△C/C_R	≤ ±20% of initial measured value
	tanδ	≤ 150% of initial specified value
	I_{Leak}	≤ the initial specified value
Shelf Life 105°C (V_R = 0)	Test	**1000 hours**
	△C/C_R	≤ ±20% of initial measured value
	tanδ	≤ 150% of initial specified value
	I_{Leak}	≤ the initial specified value
	Before measurement: Restore capacitor to 20°C, apply V_R for 30 min according JIS-C-5101-4	

MULTIPLIER K_f for RIPPLE CURRENT vs. FREQUENCY

C_R (µF) / Frequency (Hz)	50/60	100/120	400	1k	10k	50k - 100k
$C_R \le 10$	0.8	1	1.3	1.45	1.65	1.7
$10 < C_R \le 100$	0.8	1	1.23	1.36	1.48	1.53
$100 < C_R \le 2200$	0.8	1	1.16	1.25	1.35	1.38

For further information please contact sales@capxon.org

STANDARD RATINGS

Part number shows bulk version with straight leads

V_R (V)	C_R (µF)	ø D (mm)	L (mm)	I_R ▪ Max. Ripple Current +105°C ▪ 120Hz (mA rms)	CapXon Part Number
6.3	22	5	11	36	LL220M6R3C110A
	33	5	11	44	LL330M6R3C110A
	47	5	11	53	LL470M6R3C110A
	100	5	11	74	LL101M6R3C110A
	220	6.3	11	131	LL221M6R3E110A
	330	6.3	11	161	LL331M6R3E110A
	470	8	11.5	242	LL471M6R3F115A
	1000	10	12.5	390	LL102M6R3G125A
	2200	13	20	665	LL222M6R3I200A
10	22	5	11	50	LL220M010C110A
	33	5	11	66	LL330M010C110A
	47	5	11	75	LL470M010C110A
	100	5	11	104	LL101M010C110A
	220	8	11.5	193	LL221M010F115A
	330	8	11.5	256	LL331M010F115A
	470	8	11.5	319	LL471M010F115A
	1000	10	16	605	LL102M010G160A
	2200	13	20	860	LL222M010I200A
16	10	5	11	39	LL100M016C110A
	22	5	11	62	LL220M016C110A
	33	5	11	68	LL330M016C110A
	47	5	11	105	LL470M016C110A
	100	6.3	11	138	LL101M016E110A
	220	8	11.5	220	LL221M016F115A
	330	8	11.5	268	LL331M016F115A
	470	10	12.5	407	LL471M016G125A
	1000	10	20	704	LL102M016G200A
	2200	13	25	890	LL222M016I250A
25	4.7	5	11	32	LL4R7M025C110A
	10	5	11	43	LL100M025C110A
	22	5	11	65	LL220M025C110A
	33	5	11	76	LL330M025C110A
	47	6.3	11	116	LL470M025E110A
	100	8	11.5	149	LL101M025F115A
	220	10	12.5	246	LL221M025G125A
	330	10	12.5	352	LL331M025G125A
	470	10	16	484	LL471M025G160A
	1000	13	20	847	LL102M025I200A
35	4.7	5	11	33	LL4R7M035C110A
	10	5	11	48	LL100M035C110A
	22	6.3	11	71	LL220M035E110A
	33	6.3	11	83	LL330M035E110A
	47	6.3	11	125	LL470M035E110A
	100	8	11.5	187	LL101M035F115A

See "PACKAGING INFORMATION" to taped or formed products.

STANDARD RATINGS

Part number shows bulk version with straight leads

V_R (V)	C_R (µF)	ø D (mm)	L (mm)	I_R ▪ Max. Ripple Current +105°C ▪ 120Hz (mA rms)	CapXon Part Number
35	220	10	12.5	330	LL221M035G125A
	330	10	16	440	LL331M035G160A
	470	13	20	590	LL471M035I200A
	1000	13	25	1012	LL102M035I250A
50	0.1	5	11	8.8	LL0R1M050C110A
	0.22	5	11	8.8	LLR22M050C110A
	0.33	5	11	8.8	LLR33M050C110A
	0.47	5	11	12	LLR47M050C110A
	1	5	11	17	LL010M050C110A
	2.2	5	11	24	LL2R2M050C110A
	3.3	5	11	29	LL3R3M050C110A
	4.7	5	11	36	LL4R7M050C110A
	10	5	11	52	LL100M050C110A
	22	6.3	11	77	LL220M050E110A
	33	6.3	11	99	LL330M050E110A
	47	8	11.5	138	LL470M050F115A
	100	10	12.5	217	LL101M050G125A
	220	10	20	380	LL221M050G200A
	330	13	20	506	LL331M050I200A
	470	13	25	705	LL471M050I250A
63	0.1	5	11	8.8	LL0R1M063C110A
	0.22	5	11	8.8	LLR22M063C110A
	0.33	5	11	8.8	LLR33M063C110A
	0.47	5	11	12	LLR47M063C110A
	1	5	11	17	LL010M063C110A
	2.2	5	11	24	LL2R2M063C110A
	3.3	5	11	32	LL3R3M063C110A
	4.7	5	11	39	LL4R7M063C110A
	10	6.3	11	58	LL100M063E110A
	22	6.3	11	94	LL220M063E110A
	33	8	11.5	110	LL330M063F115A
	47	8	11.5	152	LL470M063F115A
	100	10	16	260	LL101M063G160A
	220	13	20	440	LL221M063I200A
	330	13	25	594	LL331M063I250A

See "PACKAGING INFORMATION" to taped or formed products.

DIMENSIONS ▪ All dimensions in mm

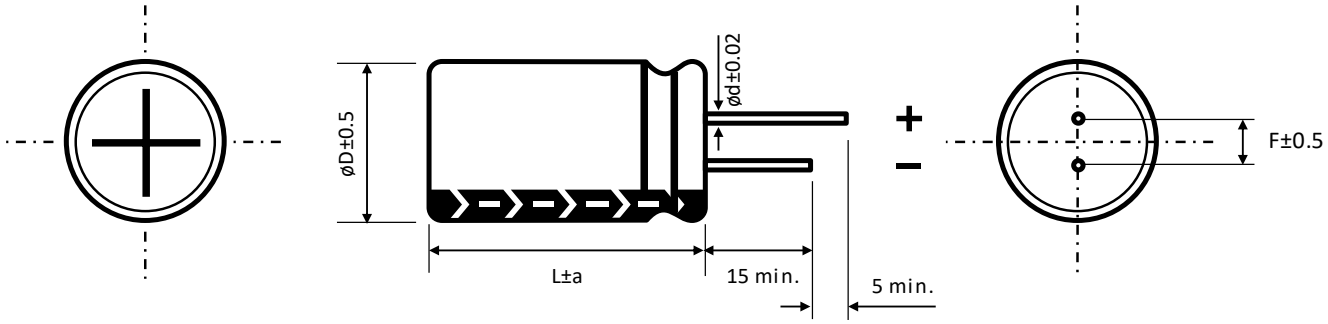

ø D	5	6.3	8	10	13
F	2	2.5	3.5	5	5
ø d	0.5			0.6	
a	1.5			1.5	

PRECAUTIONS, GUIDELINES AND PACKAGING INFORMATON

Unless otherwise agreed in individual specifications, all products are subject to our “General Precautions and Guidelines” as well as our “Packaging Information”. Please refer to the following links in the table.

General Precautions and Guidelines	Packaging Information Liquid Radial
Page 837	Page 336

DISCLAIMER

All product related data (e.g. specification, statements and general information) are subject to change without any notice. It is necessary that the customer observes all product related technical / application information and handling instructions.

CapXon products are designed and manufactured according to severe quality and safety standards. Under no circumstance, CapXon warrants that any CapXon product is suitable for the purposes intended for your application, even CapXon knows the application. It is customer's duty and obligation to check and make sure that CapXon products are suitable for the purposes intended and select the correct and proper CapXon product. Customers are requested to perform a sufficient validation and reliability evaluation to assure needed safety level and reliability performance by suitable designs and to apply proper safeguards (e.g. redundancies, protective circuits).

Particular operating conditions (ambient temperature, ripple current, voltage, thermal resistance, etc.) as well as storage, production or assembly may affect the performance and the lifetime of the capacitor. Please consult CapXon for lifetime estimation, failure mode considerations or worst-case scenarios according to the product technology, product tolerances / deviations or change of the characteristics of the capacitor due to shipment, storage, handling, production and usage.

For aerospace or military application, life-saving, life-sustaining, safety critical applications or any application where failure may cause severe personal injury or death, please consult us before design-in the capacitor in your application.

Except for the written expressed warranties, CapXon does not impliedly, by assumption or whatever else, warrant, undertake, promise any other warranty or guaranty for any CapXon product.

For further information, please visit our website www.capxongroup.com or contact CapXon directly.

LZ SERIES ▪ ULTRA LOW IMPEDANCE 105°C TYPE



KEY FEATURES

LOW IMPEDANCE

- **ALUMINUM ELECTROLYTIC CAPACITOR** ▪ THT type
- Endurance: 105°C ▪ 2000 hours
- Ultra low impedance
- Highest ripple current in small size
- Ideal for output filter applications

HF Halogen Free

RoHS & REACH COMPLIANT

SPECIFICATIONS

Items		Performance Characteristics				
Operating Temperature Range		-40 ~ +105°C				
Rated Voltage Range	V_R	6.3 ~ 25V DC				
Surge Voltage	V_S	$V_S = 1.15 \cdot V_R$				
Capacitance Range	C_R	220 ~ 3300µF				
Cap. Tolerance	ΔC	±20% (120Hz ▪ 20°C)				
Leakage Current (20°C ▪ V_R applied)	I_{LEAK}	≤ $0.01 \cdot C_R \cdot V_R$ or 3µA, whichever is greater ▪ After 2 minutes [I_{LEAK} (µA) ; C_R (µF) ; V_R (V)]				
Dissipation Factor % (20°C ▪ 120Hz)	tanδ	V_R (V DC)	6.3	10	16	25
		tanδ (%)	14	12	10	9
		For C_R ≥ 1000µF, add 2% per every multiple 1000µF of rated capacitance value				
Low Temperature Characteristics at 120Hz	Z ratio max.	V_R (V DC)	6.3	10	16	25
		Z-25°C/Z+20°C	4	3	2	2
		Z-40°C/Z+20°C	6	4	3	3
		For capacitance > 1000µF				
		Z-25°C/Z+20°C	Add 0.5 for every multiple 1000µF of rated capacitance value			
		Z-40°C/Z+20°C	Add 1 for every multiple 1000µF of rated capacitance value			

Lifetime Test		
Endurance 105°C (V_R & I_R applied)	Test	**2000 hours**
	△C/C_R	≤ ±25% of initial measured value
	tanδ	≤ 200% of initial specified value
	I_{Leak}	≤ the initial specified value
Shelf Life 105°C (V_R = 0)	Test	**1000 hours**
	△C/C_R	≤ ±25% of initial measured value
	tanδ	≤ 200% of initial specified value
	I_{Leak}	≤ the initial specified value
	Before measurement: Restore capacitor to 20°C, apply V_R for 30 min according JIS-C-5101-4	

MULTIPLIER K_f for RIPPLE CURRENT vs. FREQUENCY

C_R (µF) / Frequency (Hz)	100/120	1k	10k	100k
220 ~ 330	0.4	0.75	0.93	1
390 ~ 1000	0.5	0.85	0.95	1
1200 ~ 3300	0.55	0.9	0.98	1

For further information please contact sales@capxon.org

STANDARD RATINGS

Part number shows bulk version with straight leads

V_R (V)	C_R (µF)	ø D (mm)	L (mm)	Z ▪ Max. Impedance +20°C ▪ 100kHz (mΩ)	I_R ▪ Max. Ripple Current +105°C ▪ 100kHz (mA rms)	CapXon Part Number
6.3	560	8	11,5	38	1080	LZ561M6R3F115ETD
	680	8	11,5	38	1080	LZ681M6R3F115ETD
	820	8	11,5	38	1080	LZ821M6R3F115ETD
	1000	8	16	36	1100	LZ102M6R3F160ETD
	1000	10	12,5	27	1500	LZ102M6R3G125ETA
	1200	8	16	29	1450	LZ122M6R3F160ETD
	1500	8	20	20	1850	LZ152M6R3F200ETD
	1500	10	12,5	27	1500	LZ152M6R3G125ETA
	1800	10	16	18	1910	LZ182M6R3G160ETA
	2200	8	20	20	1850	LZ222M6R3F200ETD
	2200	10	16	18	1910	LZ222M6R3G160ETA
	2700	10	20	13	2540	LZ272M6R3G200ETA
	3300	10	30	12	2800	LZ332M6R3G300ETA
10	470	8	11,5	38	1080	LZ471M010F115ETD
	560	8	11,5	38	1080	LZ561M010F115ETD
	680	8	11,5	38	1080	LZ681M010F115ETD
	680	10	12,5	27	1500	LZ681M010G125ETA
	820	10	12,5	29	1450	LZ821M010G125ETA
	1000	8	16	29	1450	LZ102M010F160ETD
	1000	10	12,5	27	1500	LZ102M010G125ETA
	1200	8	20	20	1850	LZ122M010F200ETD
	1500	8	20	20	1850	LZ152M010F200ETD
	1500	10	16	18	1910	LZ152M010G160ETA
	1800	10	20	16	2540	LZ182M010G200ETA
	2200	10	20	15	2540	LZ222M010G200ETA
	2200	10	25	14	2800	LZ222M010G250ETA
16	330	8	11,5	38	1080	LZ331M016F115ETD
	470	8	11,5	38	1080	LZ471M016F115ETD
	470	10	12,5	27	1500	LZ471M016G125ETA
	560	8	16	29	1450	LZ561M016F160ETD
	680	8	16	29	1450	LZ681M016F160ETD
	680	10	12,5	27	1500	LZ681M016G125ETA
	820	8	20	20	1850	LZ821M016F200ETD
	1000	8	20	20	1850	LZ102M016F200ETD
	1000	10	16	18	1910	LZ102M016G160ETA
	1200	10	20	17	2540	LZ122M016G200ETA
	1500	10	20	15	2540	LZ152M016G200ETA
	1800	10	25	13	2800	LZ182M016G250ETA

See "PACKAGING INFORMATION" to taped or formed products.

For further information please contact sales@capxon.org

STANDARD RATINGS

Part number shows bulk version with straight leads

V_R (V)	C_R (µF)	ø D (mm)	L (mm)	Z ▪ Max. Impedance +20°C ▪ 100kHz (mΩ)	I_R ▪ Max. Ripple Current +105°C ▪ 100kHz (mA rms)	CapXon Part Number
25	220	8	11,5	32	1080	LZ221M025F115ETD
	270	8	11,5	31	1150	LZ271M025F115ETD
	330	8	11,5	29	1450	LZ331M025F115ETD
	330	10	12,5	27	1650	LZ331M025G125ETA
	470	8	20	20	1720	LZ471M025F200ETD
	470	10	12,5	25	1700	LZ471M025G125ETA
	470	10	16	22	1830	LZ471M025G160ETA
	560	10	16	21	1850	LZ561M025G160ETA
	680	8	20	18	1820	LZ681M025F200ETD
	680	10	16	20	1920	LZ681M025G160ETA
	680	10	20	18	2060	LZ681M025G200ETA
	1000	10	20	16	2180	LZ102M025G200ETA

See "PACKAGING INFORMATION" to taped or formed products.

DIMENSIONS ▪ All dimensions in mm

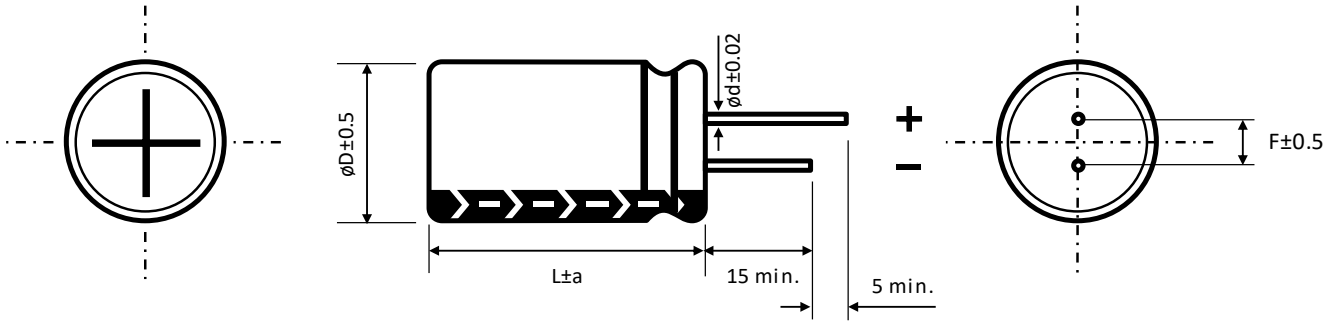

ø D	8		10
F	3.5		5
ø d	L < 20	L ≥ 20	0.6
	0.5	0.6	
a	1.5		1.5

PRECAUTIONS, GUIDELINES AND PACKAGING INFORMATON

Unless otherwise agreed in individual specifications, all products are subject to our "General Precautions and Guidelines" as well as our "Packaging Information". Please refer to the following links in the table.

General Precautions and Guidelines	Packaging Information Liquid Radial
Page 837	Page 336

For further information please contact sales@capxon.org

DISCLAIMER

All product related data (e.g. specification, statements and general information) are subject to change without any notice. It is necessary that the customer observes all product related technical / application information and handling instructions.

CapXon products are designed and manufactured according to severe quality and safety standards. Under no circumstance, CapXon warrants that any CapXon product is suitable for the purposes intended for your application, even CapXon knows the application. It is customer's duty and obligation to check and make sure that CapXon products are suitable for the purposes intended and select the correct and proper CapXon product. Customers are requested to perform a sufficient validation and reliability evaluation to assure needed safety level and reliability performance by suitable designs and to apply proper safeguards (e.g. redundancies, protective circuits).

Particular operating conditions (ambient temperature, ripple current, voltage, thermal resistance, etc.) as well as storage, production or assembly may affect the performance and the lifetime of the capacitor. Please consult CapXon for lifetime estimation, failure mode considerations or worst-case scenarios according to the product technology, product tolerances / deviations or change of the characteristics of the capacitor due to shipment, storage, handling, production and usage.

For aerospace or military application, life-saving, life-sustaining, safety critical applications or any application where failure may cause severe personal injury or death, please consult us before design-in the capacitor in your application.

Except for the written expressed warranties, CapXon does not impliedly, by assumption or whatever else, warrant, undertake, promise any other warranty or guaranty for any CapXon product.

For further information, please visit our website www.capxongroup.com or contact CapXon directly.

SY SERIES ▪ 7MM HEIGHT, LOW IMPEDANCE 105°C TYPE



KEY FEATURES

LOW HEIGHT LOW IMPEDANCE

- **ALUMINUM ELECTROLYTIC CAPACITOR** ▪ THT type
- Endurance: 105°C ▪ 2000 hours
- Miniaturized for space critical applications
- Low height ▪ 7mm
- Low impedance and high ripple current

HF Halogen Free RoHS & REACH COMPLIANT

SPECIFICATIONS

Items		Performance Characteristics						
Operating Temperature Range		-55 ~ +105°C						
Rated Voltage Range	V_R	6.3 ~ 50V DC						
Surge Voltage	V_S	$V_S = 1.15 \cdot V_R$						
Capacitance Range	C_R	1 ~ 330µF						
Cap. Tolerance	ΔC	±20% (120Hz ▪ 20°C)						
Leakage Current (20°C ▪ V_R applied)	I_{LEAK}	≤ $0.01 \cdot C_R \cdot V_R$ or 3µA, whichever is greater ▪ After 2 minutes [I_{LEAK} (µA) ; C_R (µF) ; V_R (V)]						
Dissipation Factor % (20°C ▪ 120Hz)	tanδ	V_R (V DC)	6.3	10	16	25	35	50
		tanδ (%)	18	16	14	12	12	10
Low Temperature Characteristics at 120Hz	Z ratio max.	V_R (V DC)	6.3	10	16	25	35	50
		Z-25°C/Z+20°C	2	2	2	2	2	2
		Z-55°C/Z+20°C	3	3	3	3	3	3

Lifetime Test		
Endurance 105°C (V_R applied)	Test	**2000 hours**
	△C/C_R	≤ ±20% of initial measured value
	tanδ	≤ 200% of initial specified value
	I_{Leak}	≤ the initial specified value
Shelf Life 105°C (V_R = 0)	Test	**1000 hours**
	△C/C_R	≤ ±20% of initial measured value
	tanδ	≤ 200% of initial specified value
	I_{Leak}	≤ the initial specified value
	Before measurement: Restore capacitor to 20°C, apply V_R for 30 min according JIS-C-5101-4	

MULTIPLIER K_f for RIPPLE CURRENT vs. FREQUENCY

C_R (µF) / Frequency (Hz)	50/60	100/120	400	1k	10k	50k - 100k
$1 \le C_R \le 10$	0.47	0.59	0.76	0.85	0.97	1
$10 < C_R \le 100$	0.52	0.65	0.8	0.89	0.97	1
$100 < C_R \le 330$	0.58	0.72	0.84	0.9	0.98	1

For further information please contact sales@capxon.org

STANDARD RATINGS

Part number shows bulk version with straight leads

V_R (V)	C_R (µF)	ø D (mm)	L (mm)	Z ▪ Max. Impedance +20°C ▪ 100kHz (mΩ)	I_R ▪ Max. Ripple Current +105°C ▪ 100kHz (mA rms)	CapXon Part Number
6.3	33	5	7	1950	90	SY330M6R3C070A
	47	6.3	7	1870	99	SY470M6R3E070A
	68	6.3	7	1000	125	SY680M6R3E070A
	100	6.3	7	820	144	SY101M6R3E070A
	120	6.3	7	770	148	SY121M6R3E070A
	150	6.3	7	660	160	SY151M6R3E070A
	180	8	7	640	171	SY181M6R3F070A
	220	8	7	550	180	SY221M6R3F070A
	330	8	7	390	315	SY331M6R3F070A
10	22	4	7	3630	63	SY220M010B070A
	33	5	7	1900	95	SY330M010C070A
	47	5	7	1300	120	SY470M010C070A
	68	6.3	7	880	144	SY680M010E070A
	100	6.3	7	550	180	SY101M010E070A
	120	6.3	7	520	185	SY121M010E070A
	150	8	7	500	207	SY151M010F070A
	180	8	7	490	225	SY181M010F070A
	220	8	7	400	252	SY221M010F070A
16	10	4	7	3500	60	SY100M016B070A
	15	4	7	3000	75	SY150M016B070A
	22	5	7	2000	90	SY220M016C070A
	33	6.3	7	1400	120	SY330M016E070A
	47	6.3	7	900	140	SY470M016E070A
	68	8	7	650	160	SY680M016F070A
	100	8	7	490	180	SY101M016F070A
	120	8	7	930	315	SY121M016F070A
	150	8	7	950	333	SY151M016F070A
	180	8	7	330	360	SY181M016F070A
	220	8	7	290	387	SY221M016F070A
25	10	4	7	3500	60	SY100M025B070A
	22	5	7	1870	99	SY220M025C070A
	33	6.3	7	880	144	SY330M025E070A
	47	8	7	700	160	SY470M025F070A
	68	8	7	550	180	SY680M025F070A
	100	8	7	390	225	SY101M025F070A
	150	8	7	350	306	SY151M025F070A
35	6.8	4	7	3630	63	SY6R8M035B070A
	10	5	7	3200	99	SY100M035C070A
	22	6.3	7	900	140	SY220M035E070A
	33	8	7	550	180	SY330M035F070A
	47	8	7	500	220	SY470M035F070A

See "PACKAGING INFORMATION" to taped or formed products

For further information please contact sales@capxon.org

STANDARD RATINGS

Part number shows bulk version with straight leads

V_R (V)	C_R (µF)	ø D (mm)	L (mm)	Z ▪ Max. Impedance +20°C ▪ 100kHz (mΩ)	I_R ▪ Max. Ripple Current +105°C ▪ 100kHz (mA rms)	CapXon Part Number
50	1	4	7	3500	60	SY010M050B070A
	2.2	4	7	3500	60	SY2R2M050B070A
	3.3	4	7	3500	60	SY3R3M050B070A
	4.7	4	7	3500	60	SY4R7M050B070A
	6.8	5	7	2200	80	SY6R8M050C070A
	10	6.3	7	920	135	SY100M050E070A

See "PACKAGING INFORMATION" to taped or formed products

DIMENSIONS ▪ All dimensions in mm

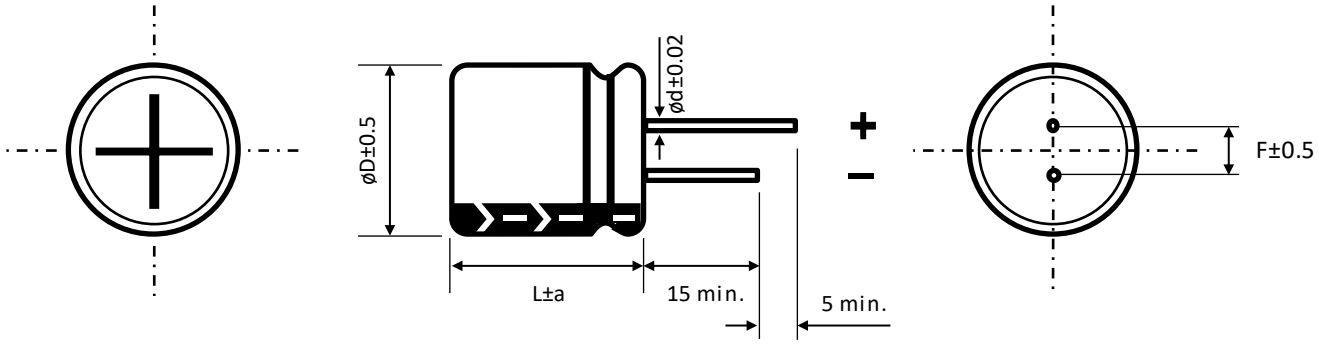

ø D	4	5	6.3	8
F	1.5	2	2.5	3.5
ø d	0.45	0.45	0.5	0.5
a	1	1	1	1

PRECAUTIONS, GUIDELINES AND PACKAGING INFORMATON

Unless otherwise agreed in individual specifications, all products are subject to our "General Precautions and Guidelines" as well as our "Packaging Information". Please refer to the following links in the table.

General Precautions and Guidelines	Packaging Information Liquid Radial
Page 837	Page 336

For further information please contact sales@capxon.org

DISCLAIMER

All product related data (e.g. specification, statements and general information) are subject to change without any notice. It is necessary that the customer observes all product related technical / application information and handling instructions.

CapXon products are designed and manufactured according to severe quality and safety standards. Under no circumstance, CapXon warrants that any CapXon product is suitable for the purposes intended for your application, even CapXon knows the application. It is customer's duty and obligation to check and make sure that CapXon products are suitable for the purposes intended and select the correct and proper CapXon product. Customers are requested to perform a sufficient validation and reliability evaluation to assure needed safety level and reliability performance by suitable designs and to apply proper safeguards (e.g. redundancies, protective circuits).

Particular operating conditions (ambient temperature, ripple current, voltage, thermal resistance, etc.) as well as storage, production or assembly may affect the performance and the lifetime of the capacitor. Please consult CapXon for lifetime estimation, failure mode considerations or worst-case scenarios according to the product technology, product tolerances / deviations or change of the characteristics of the capacitor due to shipment, storage, handling, production and usage.

For aerospace or military application, life-saving, life-sustaining, safety critical applications or any application where failure may cause severe personal injury or death, please consult us before design-in the capacitor in your application.

Except for the written expressed warranties, CapXon does not impliedly, by assumption or whatever else, warrant, undertake, promise any other warranty or guaranty for any CapXon product.

For further information, please visit our website www.capxongroup.com or contact CapXon directly.

KF SERIES ▪ LOW IMPEDANCE 105°C TYPE



KEY FEATURES

LOW IMPEDANCE HIGH VOLTAGE

- **ALUMINUM ELECTROLYTIC CAPACITOR** ▪ THT type
- Endurance: 105°C ▪ 2 000 hours up to 5 000 hours
- Low impedance and high ripple current
- High reliability
- Wide voltage range

HF Halogen Free RoHS & REACH COMPLIANT

SPECIFICATIONS

Items		Performance Characteristics									
Operating Temperature Range		-40 ~ +105°C					-25 ~ +105°C				
Rated Voltage Range	V_R	6.3 ~ 100V DC					160 ~ 450V DC				
Surge Voltage	V_S	($V_R \le 315V$): $V_S = 1.15 \cdot V_R$					($V_R > 315V$): $V_S = 1.10 \cdot V_R$				
Capacitance Range	C_R	0.47 ~ 15000µF					0.47 ~ 330µF				
Cap. Tolerance	ΔC	±20% (120Hz ▪ 20°C)									
Leakage Current (20°C ▪ V_R applied)	I_{LEAK}	≤ $0.01 \cdot C_R \cdot V_R$ or 3µA ▪ After 2 minutes					≤ $0.03 \cdot C_R \cdot V_R$ or 3µA ▪ After 2 minutes				
		[I_{LEAK} (µA) ; C_R (µF) ; V_R (V)]									
Dissipation Factor % (20°C ▪ 120Hz)	tanδ	V_R (V DC)	6.3	10	16	25	35	50	63	80	100
		tanδ (%)	18	16	14	12	10	9	8	8	8
		V_R (V DC)	160	200	250	350	400	420	450		
		tanδ (%)	12	12	12	15	15	17	17		
		For $C_R \ge 1000µF$, add 2% per every multiple 1000µF of rated capacitance value									
Low Temperature Characteristics at 120Hz	Z ratio max.	V_R (V DC)	6.3	10	16	25	35	50	63	80	100
		Z-25°C/Z+20°C	4	3	3	3	3	3	2	2	2
		Z-40°C/Z+20°C	8	6	4	3	3	3	3	3	3
		V_R (V DC)	160	200	250	350	400	450			
		Z-25°C/Z+20°C	2	2	3	5	5	6			
		Z-25°C/Z+20°C	For $C_R \ge 1000µF$		Add 0.5 for every multiple 1000µF of C_R value						
		Z-40°C/Z+20°C			Add 1 for every multiple 1000µF of C_R value						

Lifetime Test			
Endurance 105°C (V_R & I_R applied)	Test	**2 000 hours**	ø D 5 ~ 6.3 mm ▪ ≤ 100V
		3 000 hours	ø D 8 mm ▪ ≤ 100V
		5 000 hours	ø D ≥ 10 mm ▪ ≤ 100V
		2 000 hours	All ø D ▪ ≥ 160V
	△C/C_R	≤ ±20% of initial measured value	
	tanδ	≤ 200% of initial specified value	
	I_{Leak}	≤ the initial specified value	
Shelf Life 105°C (V_R = 0)	Test	**1 000 hours**	
	△C/C_R	≤ ±20% of initial measured value	
	tanδ	≤ 200% of initial specified value	
	I_{Leak}	≤ the initial specified value	
	Before measurement: Restore capacitor to 20°C, apply V_R for 30 min according JIS-C-5101-4		

For further information please contact sales@capxon.org

STANDARD RATINGS

Part number shows bulk version with straight leads

V_R (V)	C_R (µF)	ø D (mm)	L (mm)	Z ▪ Max. Impedance +20°C ▪ 100kHz (mΩ)	I_R ▪ Max. Ripple Current +105°C ▪ 100kHz (mA rms)	CapXon Part Number
6.3	100	5	11	1000	170	KF101M6R3C110A
	120	5	11	920	175	KF121M6R3C110A
	150	5	11	900	185	KF151M6R3C110A
	150	6.3	11	810	220	KF151M6R3E110A
	180	6.3	11	760	240	KF181M6R3E110A
	220	6.3	11	650	310	KF221M6R3E110A
	270	6.3	11	540	340	KF271M6R3E110A
	330	8	11.5	420	390	KF331M6R3F115A
	470	8	11.5	250	450	KF471M6R3F115A
	560	8	11.5	230	490	KF561M6R3F115A
	680	8	11.5	210	550	KF681M6R3F115A
	820	8	16	200	620	KF821M6R3F160A
	1000	8	16	180	750	KF102M6R3F160A
	1000	10	12.5	170	770	KF102M6R3G125A
	1200	10	16	160	860	KF122M6R3G160A
	1500	10	16	140	1100	KF152M6R3G160A
	1800	10	20	110	1250	KF182M6R3G200A
	2200	10	20	90	1380	KF222M6R3G200A
	2200	10	25	95	1470	KF222M6R3G250A
	2700	10	25	75	1490	KF272M6R3G250A
	2700	13	20	75	1550	KF272M6R3I200A
	3300	13	20	36	1650	KF332M6R3I200A
	4700	13	30	36	2100	KF472M6R3I300A
	4700	13	25	40	1900	KF472M6R3I250A
	5600	13	30	34	2160	KF562M6R3I300A
	6800	16	25	32	2350	KF682M6R3J250A
	8200	16	31.5	27	2550	KF822M6R3J315A
	10000	16	35.5	24	2700	KF103M6R3J355A
	15000	18	35.5	23	2950	KF153M6R3K355A
10	22	5	11	2700	98	KF220M010C110A
	33	5	11	2600	100	KF330M010C110A
	47	5	11	1340	150	KF470M010C110A
	56	5	11	1230	160	KF560M010C110A
	68	5	11	1050	170	KF680M010C110A
	100	5	11	800	210	KF101M010C110A
	120	6.3	11	750	250	KF121M010E110A
	150	6.3	11	610	290	KF151M010E110A
	180	6.3	11	460	320	KF181M010E110A
	220	6.3	11	350	340	KF221M010E110A
	270	8	11.5	300	400	KF271M010F115A
	330	8	11.5	270	460	KF331M010F115A
	470	8	11.5	250	580	KF471M010F115A
	560	8	11.5	170	550	KF561M010F115A

See "PACKAGING INFORMATION" to taped or formed products.

STANDARD RATINGS

Part number shows bulk version with straight leads

V_R (V)	C_R (µF)	ø D (mm)	L (mm)	Z ▪ Max. Impedance +20°C ▪ 100kHz (mΩ)	I_R ▪ Max. Ripple Current +105°C ▪ 100kHz (mA rms)	CapXon Part Number
10	560	10	12.5	160	635	KF561M010G125A
	680	10	12.5	110	765	KF681M010G125A
	820	10	16	100	890	KF821M010G160A
	1000	10	16	76	1040	KF102M010G160A
	1200	10	16	67	1200	KF122M010G160A
	1500	10	20	62	1400	KF152M010G200A
	1800	10	25	58	1550	KF182M010G250A
	2200	10	25	52	1650	KF222M010G250A
	2200	13	20	41	1750	KF222M010I200A
	2700	13	20	35	1900	KF272M010I200A
	3300	13	25	31	2000	KF332M010I250A
	4700	16	25	30	2100	KF472M010J250A
	5600	16	25	28	2290	KF562M010J250A
	6800	16	31.5	26	2650	KF682M010J315A
	8200	16	35.5	26	2770	KF822M010J355A
	10000	18	35.5	24	2850	KF103M010K355A
16	10	5	11	4700	74	KF100M016C110A
	22	5	11	2600	100	KF220M016C110A
	33	5	11	2000	114	KF330M016C110A
	47	5	11	1100	155	KF470M016C110A
	56	5	11	820	180	KF560M016C110A
	68	5	11	690	195	KF680M016C110A
	100	6.3	11	500	265	KF101M016E110A
	120	6.3	11	470	270	KF121M016E110A
	150	6.3	11	410	290	KF151M016E110A
	180	6.3	11	380	315	KF181M016E110A
	180	8	11.5	340	370	KF181M016F115A
	220	8	11.5	250	480	KF221M016F115A
	270	8	11.5	210	520	KF271M016F115A
	330	8	11.5	156	590	KF331M016F115A
	470	10	12.5	124	750	KF471M016G125A
	560	10	12.5	105	785	KF561M016G125A
	680	10	16	92	1100	KF681M016G160A
	820	10	16	78	1180	KF821M016G160A
	1000	10	20	65	1350	KF102M016G200A
	1200	10	25	61	1500	KF122M016G250A
	1500	10	30	56	1600	KF152M016G300A
	1500	13	20	60	1380	KF152M016I200A
	1800	10	25	50	1730	KF182M016G250A
	1800	13	20	47	1800	KF182M016I200A
	2200	13	25	38	2000	KF222M016I250A
	2200	13	20	40	1880	KF222M016I200A
	2700	13	25	33	2450	KF272M016I250A

See "PACKAGING INFORMATION" to taped or formed products.

For further information please contact sales@capxon.org

STANDARD RATINGS

Part number shows bulk version with straight leads

V_R (V)	C_R (µF)	ø D (mm)	L (mm)	Z ▪ Max. Impedance +20°C ▪ 100kHz (mΩ)	I_R ▪ Max. Ripple Current +105°C ▪ 100kHz (mA rms)	CapXon Part Number
16	3300	13	30	30	2640	KF332M016I300A
	3300	16	25	30	2790	KF332M016J250A
	4700	16	31.5	26	2880	KF472M016J315A
	5600	16	35.5	25	2990	KF562M016J355A
	6800	18	35.5	24	3200	KF682M016K355A
	8200	18	35.5	24	3320	KF822M016K355A
	10000	18	40	24	3550	KF103M016K400A
25	4.7	5	11	3950	68	KF4R7M025C110A
	5.6	5	11	3250	75	KF5R6M025C110A
	6.8	5	11	2980	80	KF6R8M025C110A
	10	5	11	2560	85	KF100M025C110A
	22	5	11	1950	125	KF220M025C110A
	33	5	11	1420	155	KF330M025C110A
	47	5	11	1100	190	KF470M025C110A
	47	6.3	11	1000	220	KF470M025E110A
	56	6.3	11	790	250	KF560M025E110A
	68	6.3	11	650	280	KF680M025E110A
	100	6.3	11	350	370	KF101M025E110A
	120	6.3	11	330	380	KF121M025E110A
	150	8	11.5	310	410	KF151M025F115A
	180	8	11.5	250	455	KF181M025F115A
	220	8	11.5	150	550	KF221M025F115A
	270	10	12.5	125	720	KF271M025G125A
	330	10	12.5	114	820	KF331M025G125A
	470	10	16	76	1200	KF471M025G160A
	560	10	16	72	1250	KF561M025G160A
	680	10	20	65	1320	KF681M025G200A
	820	10	20	52	1400	KF821M025G200A
	820	10	25	52	1530	KF821M025G250A
	1000	13	20	45	1650	KF102M025I200A
	1200	13	25	41	1980	KF122M025I250A
	1500	13	25	38	2210	KF152M025I250A
	1800	16	25	36	2510	KF182M025J250A
	2200	16	25	35	2650	KF222M025J250A
	2700	16	25	31	2820	KF272M025J250A
	3300	16	31.5	26	3240	KF332M025J315A
	4700	16	35.5	24	3650	KF472M025J355A
	5600	18	35.5	24	3720	KF562M025K355A
	6800	18	40	24	3850	KF682M025K400A
35	4.7	5	11	3650	85	KF4R7M035C110A
	5.6	5	11	3090	92	KF5R6M035C110A
	6.8	5	11	2820	97	KF6R8M035C110A
	10	5	11	2370	105	KF100M035C110A

See "PACKAGING INFORMATION" to taped or formed products.

STANDARD RATINGS

Part number shows bulk version with straight leads

V_R (V)	C_R (µF)	ø D (mm)	L (mm)	Z ▪ Max. Impedance +20°C ▪ 100kHz (mΩ)	I_R ▪ Max. Ripple Current +105°C ▪ 100kHz (mA rms)	CapXon Part Number
35	22	5	11	1500	150	KF220M035C110A
	33	5	11	1210	180	KF330M035C110A
	47	6.3	11	800	280	KF470M035E110A
	56	6.3	11	640	310	KF560M035E110A
	68	8	11.5	520	350	KF680M035F115A
	100	8	11.5	250	450	KF101M035F115A
	120	8	11.5	220	510	KF121M035F115A
	150	8	11.5	191	540	KF151M035F115A
	180	10	12.5	172	650	KF181M035G125A
	220	10	12.5	114	750	KF221M035G125A
	270	10	16	95	910	KF271M035G160A
	330	10	16	79	1050	KF331M035G160A
	470	10	20	65	1200	KF471M035G200A
	560	10	25	61	1500	KF561M035G250A
	680	13	20	56	1570	KF681M035I200A
	820	13	20	48	1700	KF821M035I200A
	1000	13	25	42	1900	KF102M035I250A
	1200	13	30	39	2130	KF122M035I300A
	1500	16	25	36	2270	KF152M035J250A
	1800	16	31.5	35	2700	KF182M035J315A
	2200	16	31.5	34	2780	KF222M035J315A
	2700	16	35.5	29	2850	KF272M035J355A
	3300	18	35.5	26	3100	KF332M035K355A
	4700	18	40	24	3500	KF472M035K400A
50	0.47	5	11	5400	25	KFR47M050C110A
	1	5	11	4000	40	KF010M050C110A
	2.2	5	11	2800	55	KF2R2M050C110A
	3.3	5	11	2200	60	KF3R3M050C110A
	4.7	5	11	2000	90	KF4R7M050C110A
	5.6	5	11	1930	105	KF5R6M050C110A
	6.8	5	11	1890	110	KF6R8M050C110A
	10	5	11	1820	120	KF100M050C110A
	22	6.3	11	1250	150	KF220M050E110A
	33	6.3	11	800	250	KF330M050E110A
	47	6.3	11	650	290	KF470M050E110A
	56	8	11.5	490	310	KF560M050F115A
	68	8	11.5	330	375	KF680M050F115A
	100	10	12.5	170	480	KF101M050G125A
	120	10	12.5	156	530	KF121M050G125A
	150	10	12.5	132	590	KF151M050G125A
	180	10	16	114	860	KF181M050G160A
	220	10	16	96	930	KF221M050G160A
	270	10	20	78	1060	KF271M050G200A

See "PACKAGING INFORMATION" to taped or formed products.

STANDARD RATINGS

Part number shows bulk version with straight leads

V_R (V)	C_R (µF)	ø D (mm)	L (mm)	Z ▪ Max. Impedance +20°C ▪ 100kHz (mΩ)	I_R ▪ Max. Ripple Current +105°C ▪ 100kHz (mA rms)	CapXon Part Number
50	330	10	25	65	1150	KF331M050G250A
	470	13	20	55	1590	KF471M050I200A
	560	13	20	50	1740	KF561M050I200A
	680	13	25	44	1930	KF681M050I250A
	820	13	30	39	2100	KF821M050I300A
	1000	16	25	36	2300	KF102M050J250A
	1200	16	31.5	36	2650	KF122M050J315A
	1500	16	35.5	34	2750	KF152M050J355A
	1800	16	35.5	34	2850	KF182M050J355A
	2200	18	35.5	32	3040	KF222M050K355A
	2700	18	40	27	3070	KF272M050K400A
	3300	18	40	25	3100	KF332M050K400A
63	0.47	5	11	5400	25	KFR47M063C110A
	1	5	11	4000	33	KF010M063C110A
	2.2	5	11	2800	45	KF2R2M063C110A
	3.3	5	11	2200	58	KF3R3M063C110A
	4.7	5	11	2000	65	KF4R7M063C110A
	5.6	5	11	1900	95	KF5R6M063C110A
	6.8	5	11	1820	100	KF6R8M063C110A
	10	5	11	1750	110	KF100M063C110A
	22	6.3	11	800	180	KF220M063E110A
	33	8	11.5	610	270	KF330M063F115A
	47	8	11.5	560	300	KF470M063F115A
	56	8	11.5	380	330	KF560M063F115A
	68	10	12.5	210	480	KF680M063G125A
	100	10	16	140	610	KF101M063G160A
	120	10	16	130	620	KF121M063G160A
	150	10	16	110	700	KF151M063G160A
	180	10	20	100	800	KF181M063G200A
	220	10	20	80	920	KF221M063G200A
	270	13	20	65	1150	KF271M063I200A
	330	13	20	55	1250	KF331M063I200A
	470	13	25	53	1620	KF471M063I250A
	560	13	25	49	1680	KF561M063I250A
	680	13	30	43	1950	KF681M063I300A
	820	16	25	38	2150	KF821M063J250A
	1000	16	31.5	34	2350	KF102M063J315A
	1200	16	35.5	32	2550	KF122M063J355A
	1500	18	35.5	31	2710	KF152M063K355A
	1800	18	40	27	3000	KF182M063K400A
80	0.47	5	11	5850	18	KFR47M080C110A
	1	5	11	4300	24	KF010M080C110A
	2.2	5	11	3200	36	KF2R2M080C110A

See "PACKAGING INFORMATION" to taped or formed products.

STANDARD RATINGS

Part number shows bulk version with straight leads

V_R (V)	C_R (µF)	ø D (mm)	L (mm)	Z ▪ Max. Impedance +20°C ▪ 100kHz (mΩ)	I_R ▪ Max. Ripple Current +105°C ▪ 100kHz (mA rms)	CapXon Part Number
80	3.3	5	11	2700	47	KF3R3M080C110A
	4.7	5	11	2500	63	KF4R7M080C110A
	5.6	5	11	2300	85	KF5R6M080C110A
	6.8	5	11	1850	92	KF6R8M080C110A
	10	5	11	1700	105	KF100M080C110A
	22	6.3	11	830	175	KF220M080E110A
	33	8	11.5	610	280	KF330M080F115A
	47	8	11.5	550	310	KF470M080F115A
	56	8	11.5	410	360	KF560M080F115A
	68	8	16	280	400	KF680M080F160A
	100	8	20	220	500	KF101M080F200A
	120	10	16	180	580	KF121M080G160A
	150	10	20	150	680	KF151M080G200A
	180	10	20	112	800	KF181M080G200A
	220	13	20	90	900	KF221M080I200A
	270	13	20	95	1080	KF271M080I200A
	330	13	25	85	1210	KF331M080I250A
	470	16	25	70	1500	KF471M080J250A
	560	16	25	62	1640	KF561M080J250A
	680	18	25	59	1680	KF681M080K250A
	820	18	31.5	56	1780	KF821M080K315A
	1000	18	31.5	45	1850	KF102M080K315A
	1200	18	35.5	42	1960	KF122M080K355A
	1500	18	40	36	2160	KF152M080K400A
100	0.47	5	11	5900	20	KFR47M100C110A
	1	5	11	4400	30	KF010M100C110A
	2.2	5	11	3300	42	KF2R2M100C110A
	3.3	5	11	2800	55	KF3R3M100C110A
	4.7	5	11	2600	72	KF4R7M100C110A
	5.6	5	11	2330	100	KF5R6M100C110A
	6.8	6.3	11	1950	115	KF6R8M100E110A
	10	6.3	11	1770	130	KF100M100E110A
	22	8	11.5	850	220	KF220M100F115A
	33	10	12.5	690	320	KF330M100G125A
	47	10	12.5	580	370	KF470M100G125A
	56	10	12.5	430	400	KF560M100G125A
	56	10	16	420	440	KF560M100G160A
	68	10	16	350	470	KF680M100G160A
	100	10	25	300	560	KF101M100G250A
	120	10	25	220	660	KF121M100G250A
	150	13	20	174	780	KF151M100I200A
	180	13	20	142	820	KF181M100I200A
	220	13	25	130	950	KF221M100I250A

See "PACKAGING INFORMATION" to taped or formed products.

STANDARD RATINGS

Part number shows bulk version with straight leads

V_R (V)	C_R (µF)	ø D (mm)	L (mm)	Z ▪ Max. Impedance +20°C ▪ 100kHz (mΩ)	I_R ▪ Max. Ripple Current +105°C ▪ 100kHz (mA rms)	CapXon Part Number
100	270	13	30	110	1120	KF271M100I300A
	330	16	25	100	1440	KF331M100J250A
	470	16	31.5	90	1650	KF471M100J315A
	560	16	35.5	85	1720	KF561M100J355A
	680	18	35.5	80	1790	KF681M100K355A
	820	18	35.5	71	1840	KF821M100K355A
	1000	18	40	66	1930	KF102M100K400A
160	0.47	5	11	18500	36	KFR47M160C110A
	1	6.3	11	12000	45	KF010M160E110A
	2.2	6.3	11	9900	55	KF2R2M160E110A
	3.3	8	11.5	4310	70	KF3R3M160F115A
	4.7	8	11.5	4160	80	KF4R7M160F115A
	5.6	10	12.5	3610	91	KF5R6M160G125A
	6.8	10	16	3120	100	KF6R8M160G160A
	10	10	12.5	3000	126	KF100M160G125A
	10	10	16	2690	140	KF100M160G160A
	22	10	16	1300	205	KF220M160G160A
	33	10	20	1100	260	KF330M160G200A
	47	10	20	1650	276	KF470M160G200A
	47	13	20	910	320	KF470M160I200A
	56	13	20	670	340	KF560M160I200A
	56	13	25	660	370	KF560M160I250A
	68	13	25	560	450	KF680M160I250A
	100	16	25	470	540	KF101M160J250A
	120	16	25	350	560	KF121M160J250A
	150	16	31.5	260	710	KF151M160J315A
	180	16	35.5	220	760	KF181M160J355A
	220	16	35.5	190	820	KF221M160J355A
	270	18	35.5	180	990	KF271M160K355A
	330	18	40	160	1180	KF331M160K400A
200	0.47	5	11	16500	36	KFR47M200C110A
	0.47	6.3	11	16500	41	KFR47M200E110A
	1	6.3	11	7760	45	KF010M200E110A
	2.2	6.3	11	5180	55	KF2R2M200E110A
	3.3	8	11.5	4250	71	KF3R3M200F115A
	4.7	8	11.5	5000	78	KF4R7M200F115A
	4.7	10	12.5	4120	85	KF4R7M200G125A
	5.6	8	11.5	4500	90	KF5R6M200F115A
	5.6	10	12.5	3550	95	KF5R6M200G125A
	6.8	8	16	3250	115	KF6R8M200F160A
	6.8	10	16	2710	140	KF6R8M200G160A
	10	8	11.5	3750	115	KF100M200F115A
	10	10	16	2020	150	KF100M200G160A

See "PACKAGING INFORMATION" to taped or formed products.

For further information please contact sales@capxon.org

STANDARD RATINGS

Part number shows bulk version with straight leads

V_R (V)	C_R (µF)	ø D (mm)	L (mm)	Z ▪ Max. Impedance +20°C ▪ 100kHz (mΩ)	I_R ▪ Max. Ripple Current +105°C ▪ 100kHz (mA rms)	CapXon Part Number
200	22	10	16	1800	186	KF220M200G160A
	22	10	20	1400	205	KF220M200G200A
	33	10	20	1000	280	KF330M200G200A
	33	13	20	800	330	KF330M200I200A
	47	10	20	720	311	KF470M200G200A
	47	13	20	650	360	KF470M200I200A
	47	13	25	620	400	KF470M200I250A
	56	13	20	450	430	KF560M200I200A
	68	13	25	420	480	KF680M200I250A
	68	16	25	350	540	KF680M200J250A
	100	16	25	300	780	KF101M200J250A
	100	16	31.5	280	820	KF101M200J315A
	120	16	25	280	740	KF121M200J250A
	120	16	31.5	260	830	KF121M200J315A
	150	16	31.5	250	840	KF151M200J315A
	150	16	35.5	230	860	KF151M200J355A
	180	18	31.5	200	920	KF181M200K315A
	220	18	35.5	190	1050	KF221M200K355A
	220	18	40	160	1090	KF221M200K400A
250	0.47	5	11	8850	40	KFR47M250C110A
	1	6.3	11	6540	50	KF010M250E110A
	2.2	8	11.5	4120	72	KF2R2M250F115A
	3.3	8	11.5	3850	75	KF3R3M250F115A
	4.7	8	11.5	3500	85	KF4R7M250F115A
	4.7	10	12.5	2950	100	KF4R7M250G125A
	5.6	8	11.5	2930	95	KF5R6M250F115A
	5.6	10	12.5	2900	105	KF5R6M250G125A
	6.8	8	16	2800	124	KF6R8M250F160A
	6.8	10	12.5	2800	126	KF6R8M250G125A
	6.8	10	16	1860	140	KF6R8M250G160A
	10	8	16	1800	141	KF100M250F160A
	10	10	12.5	1750	144	KF100M250G125A
	10	10	16	1600	160	KF100M250G160A
	22	10	16	1400	190	KF220M250G160A
	22	10	20	1300	210	KF220M250G200A
	33	10	20	1400	224	KF330M250G200A
	33	10	25	1250	248	KF330M250G250A
	33	13	20	900	310	KF330M250I200A
	47	13	20	600	375	KF470M250I200A
	47	13	25	450	405	KF470M250I250A
	56	13	25	420	420	KF560M250I250A
	68	16	25	380	490	KF680M250J250A
	100	16	31.5	270	675	KF101M250J315A

See "PACKAGING INFORMATION" to taped or formed products.

STANDARD RATINGS

Part number shows bulk version with straight leads

V_R (V)	C_R (µF)	ø D (mm)	L (mm)	Z ▪ Max. Impedance +20°C ▪ 100kHz (mΩ)	I_R ▪ Max. Ripple Current +105°C ▪ 100kHz (mA rms)	CapXon Part Number
250	120	16	31.5	260	692	KF121M250J315A
	120	16	35.5	250	730	KF121M250J355A
	150	16	35.5	240	750	KF151M250J355A
	150	18	31.5	230	750	KF151M250K315A
	180	18	35.5	210	830	KF181M250K355A
	220	18	31.5	200	850	KF221M250K315A
	220	18	40	190	910	KF221M250K400A
350	0.47	6.3	11	8820	40	KFR47M350E110A
	1	6.3	11	7900	50	KF010M350E110A
	1	8	11.5	6350	58	KF010M350F115A
	2.2	8	11.5	5300	75	KF2R2M350F115A
	2.2	10	12.5	4020	86	KF2R2M350G125A
	3.3	10	12.5	3800	90	KF3R3M350G125A
	3.3	10	16	3520	100	KF3R3M350G160A
	4.7	10	16	3130	118	KF4R7M350G160A
	4.7	10	20	2770	130	KF4R7M350G200A
	5.6	10	16	2760	120	KF5R6M350G160A
	5.6	10	20	2580	132	KF5R6M350G200A
	6.8	10	16	2430	148	KF6R8M350G160A
	6.8	10	25	1650	180	KF6R8M350G250A
	10	10	16	1640	165	KF100M350G160A
	10	10	25	1350	200	KF100M350G250A
	22	13	20	1220	220	KF220M350I200A
	33	13	20	1020	263	KF330M350I200A
	33	13	25	860	290	KF330M350I250A
	47	16	25	760	389	KF470M350J250A
	47	16	31.5	620	430	KF470M350J315A
	56	16	35.5	600	460	KF560M350J355A
	68	16	31.5	570	475	KF680M350J315A
	100	16	35.5	560	481	KF101M350J355A
	100	18	31.5	560	487	KF101M350K315A
	100	18	35.5	550	513	KF101M350K355A
	120	18	35.5	540	525	KF121M350K355A
	120	18	40	520	560	KF121M350K400A
	150	18	40	500	590	KF151M350K400A
400	0.47	6.3	11	33000	26	KFR47M400E110A
	1	8	11.5	16500	36	KF010M400F115A
	2.2	8	11.5	13000	65	KF2R2M400F115A
	2.2	10	12.5	13000	76	KF2R2M400G125A
	3.3	8	9	14000	78	KF3R3M400F090A
	3.3	8	11.5	12000	86	KF3R3M400F115A
	4.7	8	11.5	11000	89	KF4R7M400F115A
	4.7	10	12.5	10000	105	KF4R7M400G125A

See "PACKAGING INFORMATION" to taped or formed products.

STANDARD RATINGS

Part number shows bulk version with straight leads

V_R (V)	C_R (µF)	ø D (mm)	L (mm)	Z ▪ Max. Impedance +20°C ▪ 100kHz (mΩ)	I_R ▪ Max. Ripple Current +105°C ▪ 100kHz (mA rms)	CapXon Part Number
400	5.6	8	16	8000	105	KF5R6M400F160A
	5.6	10	12.5	9000	120	KF5R6M400G125A
	6.8	10	12.5	7700	144	KF6R8M400G125A
	6.8	10	16	7500	160	KF6R8M400G160A
	10	10	14	5000	201	KF100M400G140A
	10	10	16	3800	213	KF100M400G160A
	10	10	20	3600	235	KF100M400G200A
	15	10	20	3000	240	KF150M400G200A
	22	13	16	2800	268	KF220M400I160A
	22	13	20	2650	295	KF220M400I200A
	33	13	20	1800	399	KF330M400I200A
	33	13	25	1600	440	KF330M400I250A
	33	16	20	1900	459	KF330M400J200A
	47	16	20	1600	539	KF470M400J200A
	47	16	25	1400	580	KF470M400J250A
	56	16	25	1030	587	KF560M400J250A
	56	16	31.5	850	650	KF560M400J315A
	68	16	31.5	800	800	KF680M400J315A
	68	18	25	760	774	KF680M400K250A
	100	18	31.5	700	854	KF101M400K315A
	100	18	35.5	680	900	KF101M400K355A
	120	18	35.5	580	930	KF121M400K355A
420	0.47	6.3	11	34000	28	KFR47M420E110A
	1	8	11.5	17000	38	KF010M420F115A
	2.2	10	12.5	12100	58	KF2R2M420G125A
	3.3	10	12.5	11000	87	KF3R3M420G125A
	4.7	10	16	8500	102	KF4R7M420G160A
	5.6	10	16	6800	109	KF5R6M420G160A
	6.8	10	16	6000	160	KF6R8M420G160A
	10	10	20	3700	180	KF100M420G200A
	22	13	25	2700	330	KF220M420I250A
	33	16	25	1800	480	KF330M420J250A
	47	16	31.5	1100	620	KF470M420J315A
	56	16	35.5	900	670	KF560M420J355A
	68	18	31.5	800	750	KF680M420K315A
	100	18	35.5	700	820	KF101M420K355A
450	0.47	8	11.5	34000	30	KFR47M450F115A
	1	8	11.5	17350	45	KF010M450F115A
	2.2	10	16	10250	65	KF2R2M450G160A
	3.3	10	16	10000	89	KF3R3M450G160A
	4.7	10	20	5000	105	KF4R7M450G200A
	5.6	10	20	4750	110	KF5R6M450G200A
	6.8	10	20	4050	135	KF6R8M450G200A

See "PACKAGING INFORMATION" to taped or formed products.

STANDARD RATINGS

Part number shows bulk version with straight leads

V_R (V)	C_R (µF)	ø D (mm)	L (mm)	Z ▪ Max. Impedance +20°C ▪ 100kHz (mΩ)	I_R ▪ Max. Ripple Current +105°C ▪ 100kHz (mA rms)	CapXon Part Number
450	10	10	20	7000	163	KF100M450G200A
	10	10	25	3750	180	KF100M450G250A
	10	13	20	6800	189	KF100M450I200A
	22	13	25	2800	320	KF220M450I250A
	33	16	25	2200	460	KF330M450J250A
	33	18	20	2700	458	KF330M450K200A
	47	16	35.5	1050	650	KF470M450J355A
	47	18	25	1650	596	KF470M450K250A
	56	18	31.5	950	730	KF560M450K315A
	68	18	31.5	800	721	KF680M450K315A
	68	18	35.5	750	760	KF680M450K355A
	100	18	35.5	1100	825	KF101M450K355A
	100	18	40	740	880	KF101M450K400A
	120	18	40	1000	980	KF121M450K400A

See "PACKAGING INFORMATION" to taped or formed products.

DIMENSIONS ▪ All dimensions in mm

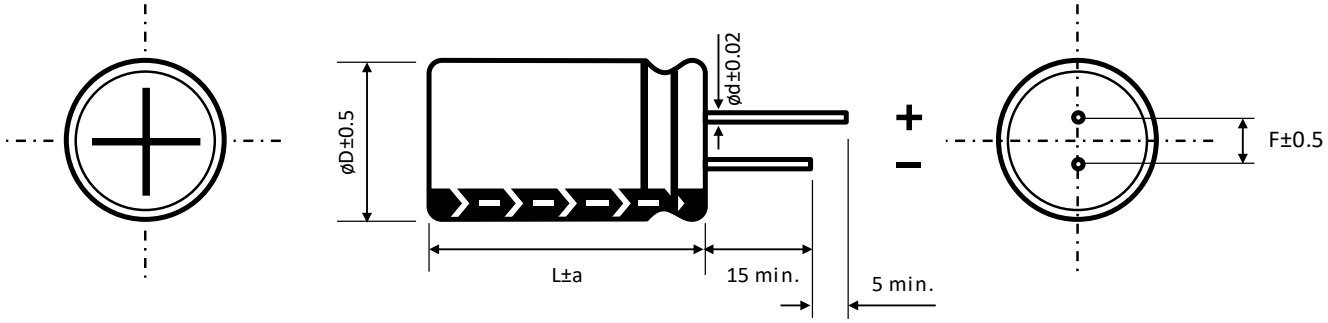

ø D	5	6.3	8		10	13	16	18
F	2	2.5	3.5		5	5	7.5	7.5
ø d	0.5		L < 20	L ≥ 20	0.6		0.8	
			0.5	0.6				

a	ø D < 16	ø D = 16		ø D = 18	
	1.5	L = 25 to 35.5	L < 25 and L ≥ 40	L = 25 to 31.5	L < 25 and L ≥ 35.5
		1.5	2	1.5	2

MULTIPLIER K_f for RIPPLE CURRENT vs. FREQUENCY

C_R (µF) / Frequency (Hz)	50/60	100/120	400	1k	10k	100k
$C_R \leq 10$	0.47	0.59	0.76	0.85	0.97	1
$10 < C_R \leq 100$	0.52	0.62	0.8	0.89	0.97	1
$100 < C_R \leq 1000$	0.58	0.72	0.84	0.9	0.98	1
$1000 \leq C_R$	0.63	0.78	0.87	0.91	0.98	1

For further information please contact sales@capxon.org

PRECAUTIONS, GUIDELINES AND PACKAGING INFORMATON

Unless otherwise agreed in individual specifications, all products are subject to our “General Precautions and Guidelines” as well as our “Packaging Information”. Please refer to the following links in the table.

General Precautions and Guidelines	Packaging Information Liquid Radial
Page 837	Page 336

DISCLAIMER

All product related data (e.g. specification, statements and general information) are subject to change without any notice. It is necessary that the customer observes all product related technical / application information and handling instructions.

CapXon products are designed and manufactured according to severe quality and safety standards. Under no circumstance, CapXon warrants that any CapXon product is suitable for the purposes intended for your application, even CapXon knows the application. It is customer's duty and obligation to check and make sure that CapXon products are suitable for the purposes intended and select the correct and proper CapXon product. Customers are requested to perform a sufficient validation and reliability evaluation to assure needed safety level and reliability performance by suitable designs and to apply proper safeguards (e.g. redundancies, protective circuits).

Particular operating conditions (ambient temperature, ripple current, voltage, thermal resistance, etc.) as well as storage, production or assembly may affect the performance and the lifetime of the capacitor. Please consult CapXon for lifetime estimation, failure mode considerations or worst-case scenarios according to the product technology, product tolerances / deviations or change of the characteristics of the capacitor due to shipment, storage, handling, production and usage.

For aerospace or military application, life-saving, life-sustaining, safety critical applications or any application where failure may cause severe personal injury or death, please consult us before design-in the capacitor in your application.

Except for the written expressed warranties, CapXon does not impliedly, by assumption or whatever else, warrant, undertake, promise any other warranty or guaranty for any CapXon product.

For further information, please visit our website www.capxongroup.com or contact CapXon directly.

GF SERIES ▪ LOW IMPEDANCE 105°C TYPE



KEY FEATURES

LOW IMPEDANCE

- **ALUMINUM ELECTROLYTIC CAPACITOR** ▪ THT type
- Endurance: 105°C ▪ 2 000 hours up to 5 000 hours
- Low impedance and high ripple current
- Wide capacitance range
- Optimized low temperature type

HF Halogen Free

RoHS & REACH COMPLIANT

SPECIFICATIONS

Items		Performance Characteristics							
Operating Temperature Range		-40 ~ +105°C							
Rated Voltage Range	V_R	6.3 ~ 100V DC							
Surge Voltage	V_S	$V_S = 1.15 \cdot V_R$							
Capacitance Range	C_R	4.7 ~ 6800µF							
Cap. Tolerance	ΔC	±20% (120Hz ▪ 20°C)							
Leakage Current (20°C ▪ V_R applied)	I_{LEAK}	≤ $0.01 \cdot C_R \cdot V_R$ or 3µA, whichever is greater ▪ After 2 minutes [I_{LEAK} (µA) ; C_R (µF) ; V_R (V)]							
Dissipation Factor % (20°C ▪ 120Hz)	tanδ	V_R (V DC)	6.3	10	16	25	35	50	63	100
		tanδ (%)	16	14	12	10	9	8	8	8
		For C_R ≥ 1000µF, add 2% per every multiple 1000µF of rated capacitance value								
Low Temperature Characteristics at 120Hz	Z ratio max.	V_R (V DC)	6.3	10	16	25	35	50	63	100
		Z-25°C/Z+20°C	4	3	3	3	3	3	2	2
		Z-40°C/Z+20°C	8	6	4	3	3	3	3	3
		For capacitance > 1000µF								
		Z-25°C/Z+20°C	Add 0.5 for every multiple 1000µF of rated capacitance value							
		Z-40°C/Z+20°C	Add 1 for every multiple 1000µF of rated capacitance value							

Lifetime Test			
Endurance 105°C (V_R & I_R applied)	Test	**2 000 hours**	ø D 5 ~ 6.3 mm
		3 000 hours	ø D 8 mm
		5 000 hours	ø D ≥ 10 mm
	△C/C_R	≤ ±20% of initial measured value	
	tanδ	≤ 200% of initial specified value	
	I_{Leak}	≤ the initial specified value	
Shelf Life 105°C (V_R = 0)	Test	**1 000 hours**	
	△C/C_R	≤ ±20% of initial measured value	
	tanδ	≤ 200% of initial specified value	
	I_{Leak}	≤ the initial specified value	
	Before measurement: Restore capacitor to 20°C, apply V_R for 30 min according JIS-C-5101-4		

For further information please contact sales@capxon.org

STANDARD RATINGS

Part number shows bulk version with straight leads

V_R (V)	C_R (µF)	ø D (mm)	L (mm)	Z ▪ Max. Impedance +20°C ▪ 100kHz (mΩ)	I_R ▪ Max. Ripple Current +105°C ▪ 100kHz (mA rms)	CapXon Part Number
6.3	100	5	11	400	200	GF101M6R3C110A
	120	5	11	380	210	GF121M6R3C110A
	150	5	11	350	225	GF151M6R3C110A
	180	6.3	11	320	300	GF181M6R3E110A
	220	6.3	11	250	360	GF221M6R3E110A
	270	6.3	11	240	377	GF271M6R3E110A
	330	6.3	11	200	395	GF331M6R3E110A
	390	8	11.5	140	576	GF391M6R3F115A
	470	8	11.5	95	600	GF471M6R3F115A
	560	8	16	87	720	GF561M6R3F160A
	680	8	16	80	800	GF681M6R3F160A
	680	10	16	84	814	GF681M6R3G160A
	820	8	20	70	970	GF821M6R3F200A
	1000	10	12.5	55	1000	GF102M6R3G125A
	1200	8	20	48	1150	GF122M6R3F200A
	1200	10	16	50	1180	GF122M6R3G160A
	1500	10	20	45	1400	GF152M6R3G200A
	1500	10	25	43	1560	GF152M6R3G250A
	1800	10	20	41	1500	GF182M6R3G200A
	2200	10	25	37	1720	GF222M6R3G250A
	2200	13	20	39	1890	GF222M6R3I200A
	2700	13	20	34	2080	GF272M6R3I200A
	3300	13	20	26	2290	GF332M6R3I200A
	3900	10	30	24	2450	GF392M6R3G300A
	3900	13	25	22	2670	GF392M6R3I250A
	4700	13	30	21	3200	GF472M6R3I300A
	5600	13	35	20	3270	GF562M6R3I350A
	6800	16	31.5	18	3490	GF682M6R3J315A
10	68	5	11	700	190	GF680M010C110A
	82	5	11	500	210	GF820M010C110A
	100	5	11	310	242	GF101M010C110A
	120	5	11	280	261	GF121M010C110A
	150	6.3	11	260	300	GF151M010E110A
	180	6.3	11	220	350	GF181M010E110A
	220	6.3	11	180	390	GF221M010E110A
	270	6.3	15	160	460	GF271M010E150A
	330	8	11.5	110	540	GF331M010F115A
	390	8	11.5	95	620	GF391M010F115A
	470	8	11.5	75	750	GF471M010F115A
	560	8	16	72	870	GF561M010F160A
	680	8	20	68	1010	GF681M010F200A
	820	8	20	65	1030	GF821M010F200A
	1000	8	20	50	1220	GF102M010F200A

See "PACKAGING INFORMATION" to taped or formed products.

STANDARD RATINGS

Part number shows bulk version with straight leads

V_R (V)	C_R (µF)	ø D (mm)	L (mm)	Z ▪ Max. Impedance +20°C ▪ 100kHz (mΩ)	I_R ▪ Max. Ripple Current +105°C ▪ 100kHz (mA rms)	CapXon Part Number
10	1000	10	16	42	1400	GF102M010G160A
	1200	10	20	35	1560	GF122M010G200A
	1500	10	20	32	1670	GF152M010G200A
	1800	10	25	28	2000	GF182M010G250A
	2200	13	20	25	2370	GF222M010I200A
	2700	13	20	23	2400	GF272M010I200A
	3300	13	25	21	2720	GF332M010I250A
	3900	13	30	20	3000	GF392M010I300A
	4700	13	35	19	3450	GF472M010I350A
	5600	16	31.5	18	3460	GF562M010J315A
	6800	16	31.5	16	3630	GF682M010J315A
16	47	5	11	400	200	GF470M016C110A
	56	5	11	380	220	GF560M016C110A
	68	5	11	350	230	GF680M016C110A
	82	5	11	310	260	GF820M016C110A
	100	6.3	11	250	360	GF101M016E110A
	120	6.3	11	230	365	GF121M016E110A
	150	6.3	11	210	385	GF151M016E110A
	180	8	11.5	190	520	GF181M016F115A
	220	8	11.5	140	575	GF221M016F115A
	270	8	11.5	120	600	GF271M016F115A
	330	8	11.5	80	740	GF331M016F115A
	390	8	16	75	790	GF391M016F160A
	470	8	16	62	990	GF471M016F160A
	470	10	12.5	58	1000	GF471M016G125A
	560	8	20	57	1070	GF561M016F200A
	680	8	20	55	1120	GF681M016F200A
	680	10	16	52	1280	GF681M016G160A
	820	10	20	48	1400	GF821M016G200A
	1000	10	20	35	1840	GF102M016G200A
	1200	10	25	32	1920	GF122M016G250A
	1500	10	25	30	2050	GF152M016G250A
	1500	13	20	29	2200	GF152M016I200A
	1800	13	20	26	2380	GF182M016I200A
	2200	13	25	22	2750	GF222M016I250A
	2700	13	25	22	3000	GF272M016I250A
	3300	13	35	18	3490	GF332M016I350A
	3900	16	25	18	3520	GF392M016J250A
	4700	16	31.5	17	3770	GF472M016J315A
25	39	5	11	420	210	GF390M025C110A
	47	5	11	350	240	GF470M025C110A
	56	5	11	310	256	GF560M025C110A
	68	6.3	11	280	300	GF680M025E110A

See "PACKAGING INFORMATION" to taped or formed products.

STANDARD RATINGS

Part number shows bulk version with straight leads

V_R (V)	C_R (µF)	ø D (mm)	L (mm)	Z ▪ Max. Impedance +20°C ▪ 100kHz (mΩ)	I_R ▪ Max. Ripple Current +105°C ▪ 100kHz (mA rms)	CapXon Part Number
25	82	6.3	11	240	350	GF820M025E110A
	100	6.3	11	150	410	GF101M025E110A
	120	6.3	15	130	490	GF121M025E150A
	150	8	11.5	110	540	GF151M025F115A
	180	8	11.5	98	620	GF181M025F115A
	220	8	11.5	75	750	GF221M025F115A
	270	8	16	63	850	GF271M025F160A
	330	8	16	56	990	GF331M025F160A
	330	10	12.5	54	1010	GF331M025G125A
	390	10	12.5	51	1050	GF391M025G125A
	470	8	20	45	1260	GF471M025F200A
	470	10	16	42	1415	GF471M025G160A
	560	10	20	40	1450	GF561M025G200A
	680	10	20	35	1570	GF681M025G200A
	820	10	25	32	1910	GF821M025G250A
	1000	13	20	25	2340	GF102M025I200A
	1200	13	20	25	2390	GF122M025I200A
	1500	13	25	23	2710	GF152M025I250A
	1800	13	30	21	3150	GF182M025I300A
	2200	13	35	18	3420	GF222M025I350A
	2700	16	31.5	18	3480	GF272M025J315A
	3300	16	31.5	18	3600	GF332M025J315A
35	33	5	11	320	230	GF330M035C110A
	39	6.3	11	310	277	GF390M035E110A
	47	6.3	11	200	340	GF470M035E110A
	56	6.3	11	200	375	GF560M035E110A
	68	6.3	11	190	400	GF680M035E110A
	82	8	11.5	170	480	GF820M035F115A
	100	8	11.5	150	560	GF101M035F115A
	120	8	11.5	130	585	GF121M035F115A
	150	8	11.5	110	680	GF151M035F115A
	180	8	16	98	810	GF181M035F160A
	220	8	16	56	1000	GF221M035F160A
	220	10	12.5	52	1060	GF221M035G125A
	270	10	16	50	1190	GF271M035G160A
	330	8	20	41	1210	GF331M035F200A
	330	10	16	38	1400	GF331M035G160A
	390	10	20	35	1550	GF391M035G200A
	470	10	20	34	1850	GF471M035G200A
	560	10	25	31	2040	GF561M035G250A
	680	13	20	29	2260	GF681M035I200A
	820	13	25	21	2630	GF821M035I250A
	1000	13	25	19	2780	GF102M035I250A

See "PACKAGING INFORMATION" to taped or formed products.

For further information please contact sales@capxon.org

STANDARD RATINGS

Part number shows bulk version with straight leads

V_R (V)	C_R (µF)	ø D (mm)	L (mm)	Z ▪ Max. Impedance +20°C ▪ 100kHz (mΩ)	I_R ▪ Max. Ripple Current +105°C ▪ 100kHz (mA rms)	CapXon Part Number
35	1200	13	30	19	2950	GF122M035I300A
	1200	16	25	18	3150	GF122M035J250A
	1500	13	35	18	3350	GF152M035I350A
	1500	16	31.5	17	3600	GF152M035J315A
	1800	16	31.5	16	3670	GF182M035J315A
	2200	16	31.5	15	3750	GF222M035J315A
	2700	18	31.5	14	3850	GF272M035K315A
50	22	5	11	350	220	GF220M050C110A
	27	6.3	11	340	265	GF270M050E110A
	33	6.3	11	320	280	GF330M050E110A
	39	6.3	11	280	300	GF390M050E110A
	47	8	11.5	200	360	GF470M050F115A
	56	8	11.5	190	385	GF560M050F115A
	68	8	11.5	170	400	GF680M050F115A
	82	8	11.5	120	550	GF820M050F115A
	100	8	11.5	75	730	GF101M050F115A
	120	8	16	73	770	GF121M050F160A
	120	10	12.5	72	790	GF121M050G125A
	150	10	12.5	68	870	GF151M050G125A
	180	8	20	55	1060	GF181M050F200A
	180	10	16	55	1090	GF181M050G160A
	220	10	16	45	1385	GF221M050G160A
	270	10	20	43	1500	GF271M050G200A
	330	10	25	32	1850	GF331M050G250A
	390	13	20	31	1910	GF391M050I200A
	470	13	20	30	2000	GF471M050I200A
	560	13	20	28	2150	GF561M050I200A
	680	13	25	26	2490	GF681M050I250A
	820	13	30	25	2770	GF821M050I300A
	820	16	25	24	2960	GF821M050J250A
	1000	16	25	20	3000	GF102M050J250A
63	10	5	11	950	135	GF100M063C110A
	15	6.3	11	850	168	GF150M063E110A
	18	6.3	11	820	170	GF180M063E110A
	22	6.3	11	750	250	GF220M063E110A
	27	6.3	11	550	260	GF270M063E110A
	33	6.3	11	380	270	GF330M063E110A
	39	8	11.5	350	320	GF390M063F115A
	47	8	11.5	220	400	GF470M063F115A
	56	8	11.5	220	420	GF560M063F115A
	68	10	12.5	200	500	GF680M063G125A
	82	8	16	170	540	GF820M063F160A
	82	10	12.5	160	570	GF820M063G125A

See "PACKAGING INFORMATION" to taped or formed products.

STANDARD RATINGS

Part number shows bulk version with straight leads

V_R (V)	C_R (µF)	ø D (mm)	L (mm)	Z ▪ Max. Impedance +20°C ▪ 100kHz (mΩ)	I_R ▪ Max. Ripple Current +105°C ▪ 100kHz (mA rms)	CapXon Part Number
63	100	10	12.5	140	720	GF101M063G125A
	120	8	20	140	790	GF121M063F200A
	120	10	16	130	835	GF121M063G160A
	150	10	16	110	900	GF151M063G160A
	180	10	20	95	1200	GF181M063G200A
	220	10	25	75	1315	GF221M063G250A
	270	13	20	71	1400	GF271M063I200A
	330	10	30	47	1750	GF331M063G300A
	330	13	25	45	1870	GF331M063I250A
	390	13	25	44	1920	GF391M063I250A
	470	13	30	41	2225	GF471M063I300A
	470	16	20	43	1970	GF471M063J200A
	560	16	25	39	2350	GF561M063J250A
	680	16	31.5	35	2600	GF681M063J315A
	820	16	31.5	31	2650	GF821M063J315A
	1000	16	35.5	26	2780	GF102M063J355A
	1000	18	31.5	28	3230	GF102M063K315A
100	4.7	5	11	1600	105	GF4R7M100C110A
	5.6	5	11	1490	116	GF5R6M100C110A
	6.8	5	11	1450	120	GF6R8M100C110A
	10	6.3	11	700	170	GF100M100E110A
	15	8	11.5	610	255	GF150M100F115A
	18	8	11.5	560	270	GF180M100F115A
	22	8	11.5	480	320	GF220M100F115A
	27	8	11.5	390	340	GF270M100F115A
	33	8	16	310	400	GF330M100F160A
	39	8	16	290	425	GF390M100F160A
	39	10	12.5	270	440	GF390M100G125A
	47	10	12.5	250	450	GF470M100G125A
	56	10	16	210	540	GF560M100G160A
	68	10	20	180	630	GF680M100G200A
	82	10	20	150	720	GF820M100G200A
	100	10	25	120	890	GF101M100G250A
	120	10	25	120	900	GF121M100G250A
	120	13	20	110	980	GF121M100I200A
	150	13	20	95	1100	GF151M100I200A
	180	13	25	78	1250	GF181M100I250A
	220	13	30	65	1420	GF221M100I300A
	220	16	20	75	1270	GF221M100J200A
	270	13	35	57	1630	GF271M100I350A
	270	16	25	58	1570	GF271M100J250A
	330	13	40	45	1650	GF331M100I400A
	390	16	31.5	43	1850	GF391M100J315A
	470	16	35.5	32	1900	GF471M100J355A

See "PACKAGING INFORMATION" to taped or formed products.

STANDARD RATINGS

Part number shows bulk version with straight leads

V_R (V)	C_R (µF)	ø D (mm)	L (mm)	Z ▪ Max. Impedance +20°C ▪ 100kHz (mΩ)	I_R ▪ Max. Ripple Current +105°C ▪ 100kHz (mA rms)	CapXon Part Number
100	470	18	31.5	38	1700	GF471M100K315A
	560	16	40	32	2170	GF561M100J400A
	560	18	31.5	31	2100	GF561M100K315A
	680	18	35.5	29	2400	GF681M100K355A

See "PACKAGING INFORMATION" to taped or formed products.

DIMENSIONS ▪ All dimensions in mm

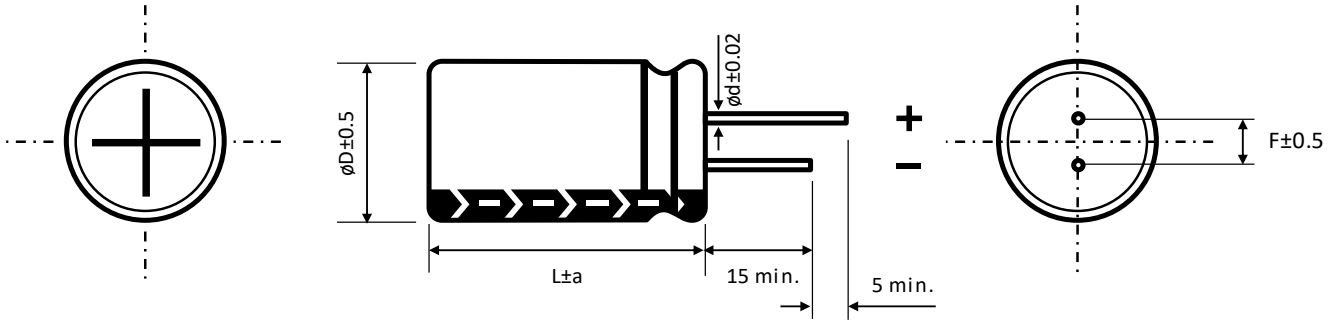

ø D	5	6.3	8		10	13	16	18
F	2	2.5	3.5		5	5	7.5	7.5
ø d	0.5		L < 20	L ≥ 20	0.6		0.8	
			0.5	0.6				

a	ø D < 16	ø D = 16		ø D = 18	
	1.5	L = 25 to 35.5	L < 25 and L ≥ 40	L = 25 to 31.5	L < 25 and L ≥ 35.5
		1.5	2	1.5	2

MULTIPLIER K_f for RIPPLE CURRENT vs. FREQUENCY

C_R (µF) / Frequency (Hz)	50/60	100/120	400	1k	10k	50k ~ 100k
$C_R \leq 10$	0.47	0.59	0.76	0.85	0.97	1
$10 < C_R \leq 100$	0.52	0.62	0.8	0.89	0.97	1
$100 < C_R \leq 1000$	0.58	0.72	0.84	0.9	0.98	1
$1000 \leq C_R$	0.63	0.78	0.87	0.91	0.98	1

For further information please contact sales@capxon.org

PRECAUTIONS, GUIDELINES AND PACKAGING INFORMATON

Unless otherwise agreed in individual specifications, all products are subject to our “General Precautions and Guidelines” as well as our “Packaging Information”. Please refer to the following links in the table.

General Precautions and Guidelines	Packaging Information Liquid Radial
Page 837	Page 336

DISCLAIMER

All product related data (e.g. specification, statements and general information) are subject to change without any notice. It is necessary that the customer observes all product related technical / application information and handling instructions.

CapXon products are designed and manufactured according to severe quality and safety standards. Under no circumstance, CapXon warrants that any CapXon product is suitable for the purposes intended for your application, even CapXon knows the application. It is customer's duty and obligation to check and make sure that CapXon products are suitable for the purposes intended and select the correct and proper CapXon product. Customers are requested to perform a sufficient validation and reliability evaluation to assure needed safety level and reliability performance by suitable designs and to apply proper safeguards (e.g. redundancies, protective circuits).

Particular operating conditions (ambient temperature, ripple current, voltage, thermal resistance, etc.) as well as storage, production or assembly may affect the performance and the lifetime of the capacitor. Please consult CapXon for lifetime estimation, failure mode considerations or worst-case scenarios according to the product technology, product tolerances / deviations or change of the characteristics of the capacitor due to shipment, storage, handling, production and usage.

For aerospace or military application, life-saving, life-sustaining, safety critical applications or any application where failure may cause severe personal injury or death, please consult us before design-in the capacitor in your application.

Except for the written expressed warranties, CapXon does not impliedly, by assumption or whatever else, warrant, undertake, promise any other warranty or guaranty for any CapXon product.

For further information, please visit our website www.capxongroup.com or contact CapXon directly.

KC SERIES ▪ ULTRA MINIATURIZED, SLIM SIZE 105°C TYPE



KEY FEATURES

SLIM TYPE

- **ALUMINUM ELECTROLYTIC CAPACITOR** ▪ THT type
- Endurance: 105°C ▪ 3000 hours
- Miniaturized for space critical applications
- Ideal in applications where snap-in capacitors are too big
- High voltage version

SPECIFICATIONS

Items		Performance Characteristics		
Operating Temperature Range		-25 ~ +105°C		
Rated Voltage Range	V_R	400 ~ 450V DC		
Surge Voltage	V_S	$V_S = 1.10 \cdot V_R$		
Capacitance Range	C_R	82 ~ 220µF		
Cap. Tolerance	ΔC	±20% (120Hz ▪ 20°C)		
Leakage Current (20°C ▪ V_R applied)	I_{LEAK}	≤ √3·C_R·V_R ▪ After 5 minutes [I_{LEAK} (µA) ; C_R (µF) ; V_R (V)]		
Dissipation Factor % (20°C ▪ 120Hz)	tanδ	V_R (V DC)	400	450
		tanδ (%)	20	20
Low Temperature Characteristics at 120Hz	Z ratio max.	V_R (V DC)	400	450
		Z-25°C/Z+20°C	8	8

Lifetime Test		
Endurance 105°C (V_R & I_R applied)	Test	**3000 hours**
	△C/C_R	≤ ±20% of initial measured value
	tanδ	≤ 200% of initial specified value
	I_{Leak}	≤ the initial specified value
Shelf Life 105°C (V_R = 0)	Test	**1000 hours**
	△C/C_R	≤ ±20% of initial measured value
	tanδ	≤ 200% of initial specified value
	I_{Leak}	≤ the initial specified value
	Before measurement: Restore capacitor to 20°C, apply V_R for 30 min according JIS-C-5101-4	

MULTIPLIER K_f for RIPPLE CURRENT vs. FREQUENCY

C_R (µF) / Frequency (Hz)	50/60	100/120	400	1k	10k	50k ~ 100k
82 < C_R ≤ 220	0.8	1	1.3	1.45	1.5	1.65

For further information please contact sales@capxon.org

STANDARD RATINGS

Part number shows bulk version with straight leads

V_R (V)	C_R (µF)	ø D (mm)	L (mm)	I_R ▪ Max. Ripple Current +105°C ▪ 120Hz (mA rms)	CapXon Part Number
400	82	16	25	600	KC820M400J250A
	100	16	31.5	710	KC101M400J315A
	120	16	35.5	800	KC121M400J355A
	150	16	40	920	KC151M400J400A
	150	18	31.5	890	KC151M400K315A
	180	16	50	1080	KC181M400J500A
	180	18	40	1060	KC181M400K400A
	220	18	45	1200	KC221M400K450A
420	100	16	31.5	690	KC101M420J315A
	120	16	35.5	780	KC121M420J355A
	120	18	31.5	800	KC121M420K315A
	150	16	45	940	KC151M420J450A
	150	18	35.5	920	KC151M420K355A
	180	16	50	1050	KC181M420J500A
	180	18	40	1040	KC181M420K400A
	220	18	50	1220	KC221M420K500A
450	82	16	31.5	640	KC820M450J315A
	100	16	35.5	730	KC101M450J355A
	120	16	40	820	KC121M450J400A
	120	18	31.5	800	KC121M450K315A
	150	16	50	980	KC151M450J500A
	150	18	40	970	KC151M450K400A
	180	18	45	1090	KC181M450K450A
	220	18	50	1220	KC221M450K500A

See "PACKAGING INFORMATION" to taped or formed products.

DIMENSIONS ▪ All dimensions in mm

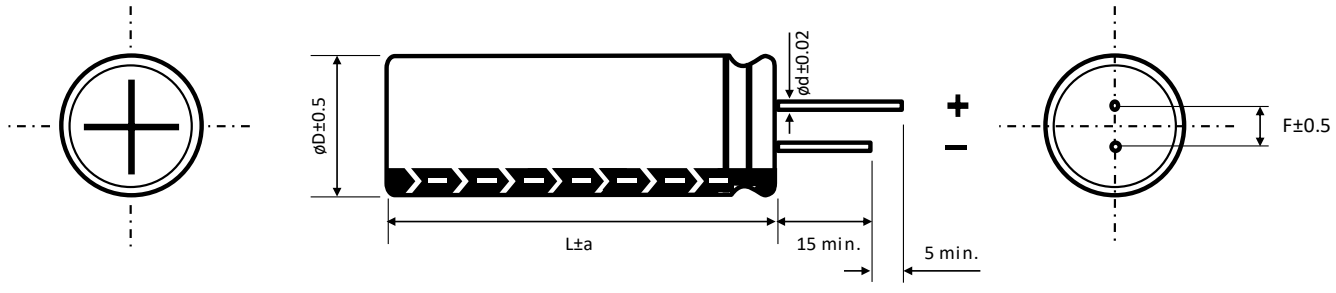

ø D	16	18
F	7.5	7.5
ø d	0.8	0.8
a	2	2

For further information please contact sales@capxon.org

PRECAUTIONS, GUIDELINES AND PACKAGING INFORMATON

Unless otherwise agreed in individual specifications, all products are subject to our “General Precautions and Guidelines” as well as our “Packaging Information”. Please refer to the following links in the table.

General Precautions and Guidelines	Packaging Information Liquid Radial
Page 837	Page 336

DISCLAIMER

All product related data (e.g. specification, statements and general information) are subject to change without any notice. It is necessary that the customer observes all product related technical / application information and handling instructions.

CapXon products are designed and manufactured according to severe quality and safety standards. Under no circumstance, CapXon warrants that any CapXon product is suitable for the purposes intended for your application, even CapXon knows the application. It is customer's duty and obligation to check and make sure that CapXon products are suitable for the purposes intended and select the correct and proper CapXon product. Customers are requested to perform a sufficient validation and reliability evaluation to assure needed safety level and reliability performance by suitable designs and to apply proper safeguards (e.g. redundancies, protective circuits).

Particular operating conditions (ambient temperature, ripple current, voltage, thermal resistance, etc.) as well as storage, production or assembly may affect the performance and the lifetime of the capacitor. Please consult CapXon for lifetime estimation, failure mode considerations or worst-case scenarios according to the product technology, product tolerances / deviations or change of the characteristics of the capacitor due to shipment, storage, handling, production and usage.

For aerospace or military application, life-saving, life-sustaining, safety critical applications or any application where failure may cause severe personal injury or death, please consult us before design-in the capacitor in your application.

Except for the written expressed warranties, CapXon does not impliedly, by assumption or whatever else, warrant, undertake, promise any other warranty or guaranty for any CapXon product.

For further information, please visit our website www.capxongroup.com or contact CapXon directly.

SG SERIES ▪ 7/9 MM HEIGHT, AUTOMOTIVE 105°C TYPE



KEY FEATURES

AEC-Q 200 LOW HEIGHT

- **ALUMINUM ELECTROLYTIC CAPACITOR** ▪ THT type
- Endurance: 105°C ▪ 4000 hours
- Miniaturized for space critical applications
- Low height ▪ 7mm and 9mm
- AEC-Q200 version available

SPECIFICATIONS

Items		Performance Characteristics						
Operating Temperature Range		-40 ~ +105°C						
Rated Voltage Range	V_R	6.3 ~ 50V DC						
Surge Voltage	V_S	$V_S = 1.15 \cdot V_R$						
Capacitance Range	C_R	0.1 ~ 470µF						
Cap. Tolerance	ΔC	±20% (120Hz ▪ 20°C)						
Leakage Current (20°C ▪ V_R applied)	I_{LEAK}	≤ 0.01CV or 3µA, whichever is greater After 2 minutes						
Dissipation Factor % (20°C ▪ 120Hz)	tanδ	V_R (V DC)	6.3	10	16	25	35	50
		tanδ (%)	24	20	17	15	13	12
Low Temperature Characteristics at 120Hz	Z ratio max.	V_R (V DC)	6.3	10	16	25	35	50
		Z-25°C/Z+20°C	4	3	2	2	2	2
		Z-40°C/Z+20°C	8	6	4	3	3	3

Lifetime Test		
Endurance 105°C (V_R applied)	Test	**4000 hours**
	△C/C_R	≤ ±30% of initial measured value
	tanδ	≤ 300% of initial specified value
	I_{Leak}	≤ the initial specified value
Shelf Life 105°C (V_R = 0)	Test	**1000 hours**
	△C/C_R	≤ ±30% of initial measured value
	tanδ	≤ 300% of initial specified value
	I_{Leak}	≤ the initial specified value
	Before measurement: Restore capacitor to 20°C, apply V_R for 30 min according JIS-C-5101-4	

MULTIPLIER K_f for RIPPLE CURRENT vs. FREQUENCY

C_R (µF) / Frequency (Hz)	50/60	100/120	1k	50k ~ 100k
0.1 < C_R ≤ 470	0.65	1	1.35	1.5

For further information please contact sales@capxon.org

STANDARD RATINGS

Part number shows bulk version with straight leads

V_R (V)	C_R (µF)	ø D (mm)	L (mm)	I_R ▪ Max. Ripple Current +105°C ▪ 120Hz (mA rms)	CapXon Part Number
6.3	22	4	7	35	SG220M6R3B070A ☐☐
	33	5	7	43	SG330M6R3C070A ☐☐
	47	5	7	50	SG470M6R3C070A ☐☐
	100	6.3	7	76	SG101M6R3E070A ☐☐
	220	8	7	131	SG221M6R3F070A ☐☐
	330	8	9	145	SG331M6R3F090A ☐☐
	470	8	9	145	SG471M6R3F090A ☐☐
10	22	5	7	42	SG220M010C070A ☐☐
	33	5	7	50	SG330M010C070A ☐☐
	47	6.3	7	60	SG470M010E070A ☐☐
	100	8	7	96	SG101M010F070A ☐☐
	220	8	9	145	SG221M010F090A ☐☐
	330	8	9	145	SG331M010F090A ☐☐
	470	8	9	145	SG471M010F090A ☐☐
	470	10	9	165	SG471M010G090A ☐☐
16	10	4	7	29	SG100M016B070A ☐☐
	10	5	7	29	SG100M016C070A ☐☐
	22	5	7	46	SG220M016C070A ☐☐
	33	6.3	7	58	SG330M016E070A ☐☐
	47	6.3	7	70	SG470M016E070A ☐☐
	100	6.3	7	95	SG101M016E070A ☐☐
	100	8	7	110	SG101M016F070A ☐☐
	220	8	9	145	SG221M016F090A ☐☐
	330	8	9	145	SG331M016F090A ☐☐
	330	10	9	165	SG331M016G090A ☐☐
	470	10	9	165	SG471M016G090A ☐☐
25	10	5	7	36	SG100M025C070A ☐☐
	22	6.3	7	52	SG220M025E070A ☐☐
	33	6.3	7	65	SG330M025E070A ☐☐
	47	6.3	7	70	SG470M025E070A ☐☐
	47	8	7	80	SG470M025F070A ☐☐
	100	8	7	100	SG101M025F070A ☐☐
	100	8	9	145	SG101M025F090A ☐☐
	150	8	9	145	SG151M025F090A ☐☐
	220	10	9	165	SG221M025G090A ☐☐
35	10	4	7	26	SG100M035B070A ☐☐
	22	6.3	7	60	SG220M035E070A ☐☐
	33	8	7	75	SG330M035F070A ☐☐
	47	8	9	89	SG470M035F090A ☐☐
	100	10	9	165	SG101M035G090A ☐☐

☐: Enter **blank** for Standard version ☐: Enter **X** for AEC-Q200 version

See "PACKAGING INFORMATION" to taped or formed products.

For further information please contact sales@capxon.org

STANDARD RATINGS

Part number shows bulk version with straight leads

V_R (V)	C_R (µF)	ø D (mm)	L (mm)	I_R ▪ Max. Ripple Current +105°C ▪ 120Hz (mA rms)	CapXon Part Number
50	0.1	4	7	1.5	SG0R1M050B070A [ ] [ ]
	0.22	4	7	2.5	SGR22M050B070A [ ] [ ]
	0.33	4	7	3.5	SGR33M050B070A [ ] [ ]
	0.47	4	7	5	SGR47M050B070A [ ] [ ]
	1	4	7	12	SG010M050B070A [ ] [ ]
	2.2	4	7	21	SG2R2M050B070A [ ] [ ]
	3.3	4	7	26	SG3R3M050B070A [ ] [ ]
	4.7	5	7	31	SG4R7M050C070A [ ] [ ]
	10	6.3	7	46	SG100M050E070A [ ] [ ]
	22	8	7	67	SG220M050F070A [ ] [ ]
	33	8	9	89	SG330M050F090A [ ] [ ]
	47	8	9	89	SG470M050F090A [ ] [ ]
	100	10	9	165	SG101M050G090A [ ] [ ]

[ ]: Enter **blank** for Standard version [ ]: Enter **X** for AEC-Q200 version

See "PACKAGING INFORMATION" to taped or formed products.

DIMENSIONS ▪ All dimensions in mm

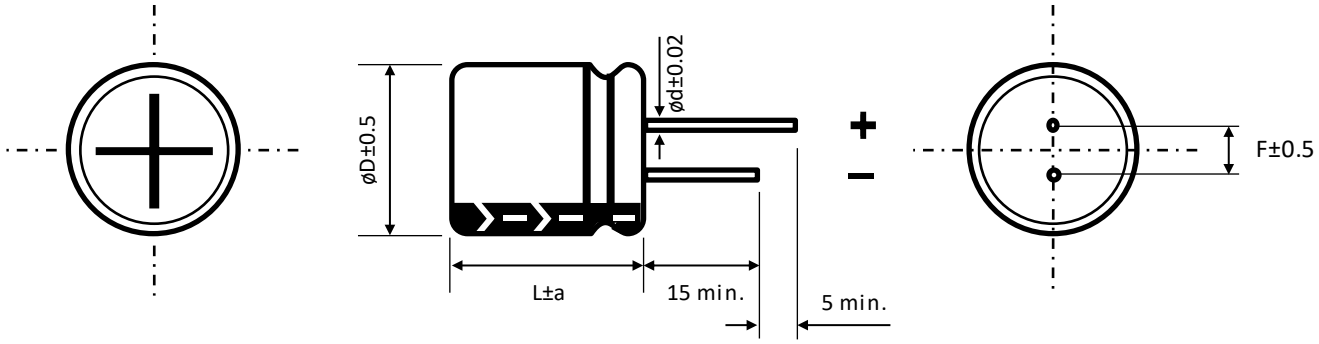

ø D	4	5	6.3	8		10	
F	1.5	2	2.5	3.5		5	
ø d	0.45	0.45	0.5	0.5		0.6	
a	1	1	1	L = 7	L = 9	L = 7	L = 9
				1	1.5	1	1.5

For further information please contact sales@capxon.org

PRECAUTIONS, GUIDELINES AND PACKAGING INFORMATON

Unless otherwise agreed in individual specifications, all products are subject to our “General Precautions and Guidelines” as well as our “Packaging Information”. Please refer to the following links in the table.

General Precautions and Guidelines	Packaging Information Liquid Radial
Page 837	Page 336

DISCLAIMER

All product related data (e.g. specification, statements and general information) are subject to change without any notice. It is necessary that the customer observes all product related technical / application information and handling instructions.

CapXon products are designed and manufactured according to severe quality and safety standards. Under no circumstance, CapXon warrants that any CapXon product is suitable for the purposes intended for your application, even CapXon knows the application. It is customer's duty and obligation to check and make sure that CapXon products are suitable for the purposes intended and select the correct and proper CapXon product. Customers are requested to perform a sufficient validation and reliability evaluation to assure needed safety level and reliability performance by suitable designs and to apply proper safeguards (e.g. redundancies, protective circuits).

Particular operating conditions (ambient temperature, ripple current, voltage, thermal resistance, etc.) as well as storage, production or assembly may affect the performance and the lifetime of the capacitor. Please consult CapXon for lifetime estimation, failure mode considerations or worst-case scenarios according to the product technology, product tolerances / deviations or change of the characteristics of the capacitor due to shipment, storage, handling, production and usage.

For aerospace or military application, life-saving, life-sustaining, safety critical applications or any application where failure may cause severe personal injury or death, please consult us before design-in the capacitor in your application.

Except for the written expressed warranties, CapXon does not impliedly, by assumption or whatever else, warrant, undertake, promise any other warranty or guaranty for any CapXon product.

For further information, please visit our website www.capxongroup.com or contact CapXon directly.

FH SERIES ▪ HIGH RIPPLE CURRENT 105°C TYPE



KEY FEATURES

LOW IMPEDANCE

- **ALUMINUM ELECTROLYTIC CAPACITOR** ▪ THT type
- Endurance: 105°C ▪ 4000 hours up to 10000 hours
- Low impedance and high ripple current
- Wide capacitance range, up to 18000µF
- Low voltage version

HF Halogen Free
RoHS & REACH COMPLIANT

SPECIFICATIONS

Items		Performance Characteristics							
Operating Temperature Range		-40 ~ +105°C							
Rated Voltage Range	V_R	6.3 ~ 100V DC							
Surge Voltage	V_S	$V_S = 1.15 \cdot V_R$							
Capacitance Range	C_R	6.8 ~ 18000µF							
Cap. Tolerance	ΔC	±20% (120Hz ▪ 20°C)							
Leakage Current (20°C ▪ V_R applied)	I_{LEAK}	≤ $0.01 \cdot C_R \cdot V_R$ or 3µA, whichever is greater ▪ After 2 minutes [I_{LEAK} (µA) ; C_R (µF) ; V_R (V)]							
Dissipation Factor % (20°C ▪ 120Hz)	tanδ	V_R (V DC)	6.3	10	16	25	35	50	63	100
		tanδ (%)	22	19	16	14	12	10	9	8
		For C_R ≥ 1000µF, add 2% per every multiple 1000µF of rated capacitance value								
Low Temperature Characteristics at 120Hz	Z ratio max.	V_R (V DC)	6.3	10	16	25	35	50	63	100
		Z-25°C/Z+20°C	4	3	2	2	2	2	2	2
		Z-40°C/Z+20°C	8	6	4	3	3	3	3	3
		For capacitance > 1000µF								
		Z-25°C/Z+20°C	Add 0.5 for every multiple 1000µF of rated capacitance value							
		Z-40°C/Z+20°C	Add 1 for every multiple 1000µF of rated capacitance value							

Lifetime Test			
Endurance 105°C (V_R & I_R applied)	Test	**4000 hours**	ø D ≤ 6.3 mm ▪ 6.3 ~ 10V
		5000 hours	ø D ≤ 6.3 mm ▪ 16 ~ 100V
		6000 hours	ø D = 8 & 10 mm ▪ 6.3 ~ 10V
		7000 hours	ø D = 8 & 10 mm ▪ 16 ~ 100V
		8000 hours	ø D ≥ 13 mm ▪ 6.3 ~ 10V
		10000 hours	ø D ≥ 13 mm ▪ 16 ~ 100V
	△C/C_R	≤ ±25% of initial measured value	
	tanδ	≤ 200% of initial specified value	
	I_{Leak}	≤ the initial specified value	
Shelf Life 105°C (V_R = 0)	Test	**1000 hours**	
	△C/C_R	≤ ±25% of initial measured value	
	tanδ	≤ 200% of initial specified value	
	I_{Leak}	≤ the initial specified value	
	Before measurement: Restore capacitor to 20°C, apply V_R for 30 min according JIS-C-5101-4		

For further information please contact sales@capxon.org

STANDARD RATINGS

Part number shows bulk version with straight leads

V_R (V)	C_R (µF)	ø D (mm)	L (mm)	Z ▪ Max. Impedance +20°C ▪ 100kHz (mΩ)	I_R ▪ Max. Ripple Current +105°C ▪ 100kHz (mA rms)	CapXon Part Number
6.3	150	5	11	550	220	FH151M6R3C110A
	220	6.3	11	260	300	FH221M6R3E110A
	330	6.3	11	210	350	FH331M6R3E110A
	470	8	11.5	140	440	FH471M6R3F115A
	680	8	11.5	130	650	FH681M6R3F115A
	820	10	12.5	90	870	FH821M6R3G125A
	1000	8	16	80	850	FH102M6R3F160A
	1200	8	20	75	1060	FH122M6R3F200A
	1200	10	16	64	1220	FH122M6R3G160A
	1500	10	20	50	1410	FH152M6R3G200A
	1800	13	16	49	1460	FH182M6R3I160A
	2200	10	25	46	1660	FH222M6R3G250A
	2700	16	16	42	1950	FH272M6R3J160A
	3300	13	20	38	1910	FH332M6R3I200A
	3900	13	25	29	2240	FH392M6R3I250A
	3900	18	16	40	2220	FH392M6R3K160A
	4700	13	30	27	2660	FH472M6R3I300A
	5600	13	35	24	2890	FH562M6R3I350A
	5600	16	20	27	2540	FH562M6R3J200A
	6800	13	40	17	3360	FH682M6R3I400A
	6800	16	25	21	2940	FH682M6R3J250A
	6800	18	20	26	2870	FH682M6R3K200A
	8200	16	31.5	17	3460	FH822M6R3J315A
	10000	16	35.5	15	3620	FH103M6R3J355A
	10000	18	25	19	3150	FH103M6R3K250A
	12000	16	40	13	4090	FH123M6R3J400A
	12000	18	31.5	15	4180	FH123M6R3K315A
	15000	18	35.5	14	4230	FH153M6R3K355A
	18000	18	40	12	4290	FH183M6R3K400A
10	100	5	11	580	220	FH101M010C110A
	220	6.3	11	230	350	FH221M010E110A
	330	6.3	11	220	450	FH331M010E110A
	470	8	11.5	130	650	FH471M010F115A
	680	8	16	96	850	FH681M010F160A
	680	10	12.5	85	870	FH681M010G125A
	820	10	16	75	950	FH821M010G160A
	1000	8	20	72	1060	FH102M010F200A
	1000	10	16	64	1220	FH102M010G160A
	1200	10	20	45	1410	FH122M010G200A
	1500	10	25	43	1560	FH152M010G250A
	1500	13	16	49	1460	FH152M010I160A
	2200	10	30	30	1920	FH222M010G300A
	2200	13	20	35	1910	FH222M010I200A

See "PACKAGING INFORMATION" to taped or formed products.

STANDARD RATINGS

Part number shows bulk version with straight leads

V_R (V)	C_R (µF)	ø D (mm)	L (mm)	Z ▪ Max. Impedance +20°C ▪ 100kHz (mΩ)	I_R ▪ Max. Ripple Current +105°C ▪ 100kHz (mA rms)	CapXon Part Number
10	2200	16	16	42	1950	FH222M010J160A
	2700	18	16	43	2220	FH272M010K160A
	3300	13	25	29	2240	FH332M010I250A
	3900	13	30	25	2660	FH392M010I300A
	3900	16	20	27	2540	FH392M010J200A
	4700	13	35	20	2890	FH472M010I350A
	5600	13	40	17	3360	FH562M010I400A
	5600	16	25	21	2940	FH562M010J250A
	5600	18	20	26	2870	FH562M010K200A
	6800	16	31.5	17	3460	FH682M010J315A
	6800	18	25	19	3150	FH682M010K250A
	8200	16	35.5	15	3620	FH822M010J355A
	8200	18	31.5	15	4180	FH822M010K315A
	10000	16	40	13	4090	FH103M010J400A
	10000	18	35.5	14	4230	FH103M010K355A
	12000	18	40	12	4290	FH123M010K400A
16	56	5	11	560	220	FH560M016C110A
	100	6.3	11	220	300	FH101M016E110A
	120	6.3	11	215	350	FH121M016E110A
	220	8	11.5	180	500	FH221M016F115A
	330	8	11.5	140	650	FH331M016F115A
	470	8	11.5	100	740	FH471M016F115A
	470	8	16	95	850	FH471M016F160A
	470	10	12.5	85	870	FH471M016G125A
	680	8	20	80	1060	FH681M016F200A
	680	10	16	60	1220	FH681M016G160A
	820	10	20	52	1300	FH821M016G200A
	1000	10	20	46	1410	FH102M016G200A
	1000	13	16	50	1460	FH102M016I160A
	1200	10	25	44	1660	FH122M016G250A
	1500	10	25	36	1770	FH152M016G250A
	1500	10	30	31	1920	FH152M016G300A
	1500	13	20	37	1910	FH152M016I200A
	1500	16	16	42	1950	FH152M016J160A
	1800	10	25	36	1800	FH182M016G250A
	1800	13	25	30	2080	FH182M016I250A
	2200	13	25	26	2240	FH222M016I250A
	2200	18	16	43	2220	FH222M016K160A
	2700	13	30	23	2660	FH272M016I300A
	2700	16	20	27	2540	FH272M016J200A
	3300	13	35	22	2890	FH332M016I350A
	3900	13	40	17	3360	FH392M016I400A
	3900	16	25	21	2940	FH392M016J250A

See "PACKAGING INFORMATION" to taped or formed products.

For further information please contact sales@capxon.org

STANDARD RATINGS

Part number shows bulk version with straight leads

V_R (V)	C_R (µF)	ø D (mm)	L (mm)	Z ▪ Max. Impedance +20°C ▪ 100kHz (mΩ)	I_R ▪ Max. Ripple Current +105°C ▪ 100kHz (mA rms)	CapXon Part Number
16	3900	18	20	26	2870	FH392M016K200A
	4700	16	31.5	17	3460	FH472M016J315A
	4700	18	25	20	3150	FH472M016K250A
	5600	16	35.5	15	3620	FH562M016J355A
	5600	18	31.5	15	4180	FH562M016K315A
	6800	16	40	13	4090	FH682M016J400A
	8200	18	35.5	14	4230	FH822M016K355A
	10000	18	40	12	4290	FH103M016K400A
25	47	5	11	560	220	FH470M025C110A
	56	5	11	560	260	FH560M025C110A
	100	6.3	11	250	350	FH101M025E110A
	220	8	11.5	150	650	FH221M025F115A
	330	8	16	92	850	FH331M025F160A
	330	10	12.5	82	870	FH331M025G125A
	470	8	20	74	1060	FH471M025F200A
	470	10	12.5	74	1100	FH471M025G125A
	470	10	16	68	1220	FH471M025G160A
	680	10	20	50	1410	FH681M025G200A
	680	13	16	49	1460	FH681M025I160A
	820	10	25	41	1660	FH821M025G250A
	1000	10	30	32	1920	FH102M025G300A
	1000	13	20	36	1910	FH102M025I200A
	1000	16	16	42	1950	FH102M025J160A
	1200	18	16	43	2220	FH122M025K160A
	1500	13	25	28	2240	FH152M025I250A
	1800	13	30	24	2660	FH182M025I300A
	1800	16	20	27	2540	FH182M025J200A
	2200	13	30	25	2695	FH222M025I300A
	2200	13	35	23	2890	FH222M025I350A
	2200	18	20	26	2870	FH222M025K200A
	2700	13	40	17	3360	FH272M025I400A
	2700	16	25	22	2940	FH272M025J250A
	3300	16	31.5	17	3460	FH332M025J315A
	3300	18	25	19	3150	FH332M025K250A
	3900	16	35.5	15	3620	FH392M025J355A
	3900	18	31.5	15	4180	FH392M025K315A
	4700	16	40	13	4090	FH472M025J400A
	4700	18	35.5	14	4230	FH472M025K355A
	5600	18	40	12	4290	FH562M025K400A
35	33	5	11	550	230	FH330M035C110A
	47	5	11	450	300	FH470M035C110A
	56	6.3	11	210	360	FH560M035E110A
	100	6.3	11	180	480	FH101M035E110A

See "PACKAGING INFORMATION" to taped or formed products.

For further information please contact sales@capxon.org

STANDARD RATINGS

Part number shows bulk version with straight leads

V_R (V)	C_R (µF)	ø D (mm)	L (mm)	Z ▪ Max. Impedance +20°C ▪ 100kHz (mΩ)	I_R ▪ Max. Ripple Current +105°C ▪ 100kHz (mA rms)	CapXon Part Number
35	150	8	11.5	140	680	FH151M035F115A
	220	8	11.5	95	870	FH221M035F115A
	220	8	16	90	1000	FH221M035F160A
	220	10	12.5	80	1060	FH221M035G125A
	270	8	20	70	1180	FH271M035F200A
	330	10	16	62	1380	FH331M035G160A
	470	10	20	48	1800	FH471M035G200A
	470	13	16	49	1560	FH471M035I160A
	560	10	25	42	1900	FH561M035G250A
	680	10	30	35	2000	FH681M035G300A
	680	13	20	34	2100	FH681M035I200A
	680	16	16	42	2050	FH681M035J160A
	1000	13	20	38	2180	FH102M035I200A
	1000	13	25	28	2400	FH102M035I250A
	1000	18	16	43	2220	FH102M035K160A
	1200	13	30	24	2800	FH122M035I300A
	1200	16	20	28	2800	FH122M035J200A
	1500	13	35	22	3000	FH152M035I350A
	1800	13	40	17	3360	FH182M035I400A
	1800	16	25	20	2940	FH182M035J250A
	1800	18	20	26	2870	FH182M035K200A
	2200	16	31.5	17	3460	FH222M035J315A
	2200	18	20	25	2930	FH222M035K200A
	2200	18	25	19	3150	FH222M035K250A
	2700	16	35.5	18	3620	FH272M035J355A
	2700	18	31.5	16	4180	FH272M035K315A
	3300	16	40	13	4090	FH332M035J400A
	3300	18	35.5	14	4230	FH332M035K355A
	3900	18	40	12	4300	FH392M035K400A
50	22	5	11	650	220	FH220M050C110A
	47	6.3	11	370	270	FH470M050E110A
	56	6.3	11	290	300	FH560M050E110A
	100	8	11.5	160	680	FH101M050F115A
	120	8	16	120	760	FH121M050F160A
	150	10	12.5	120	800	FH151M050G125A
	180	8	20	90	1000	FH181M050F200A
	220	10	16	82	1300	FH221M050G160A
	270	10	20	60	1350	FH271M050G200A
	270	13	16	61	1270	FH271M050I160A
	330	10	25	57	1600	FH331M050G250A
	470	10	30	48	1800	FH471M050G300A
	470	13	20	45	1740	FH471M050I200A
	470	16	16	55	1710	FH471M050J160A

See "PACKAGING INFORMATION" to taped or formed products.

STANDARD RATINGS

Part number shows bulk version with straight leads

V_R (V)	C_R (µF)	ø D (mm)	L (mm)	Z ▪ Max. Impedance +20°C ▪ 100kHz (mΩ)	I_R ▪ Max. Ripple Current +105°C ▪ 100kHz (mA rms)	CapXon Part Number
50	560	13	25	42	1960	FH561M050I250A
	560	18	16	54	1940	FH561M050K160A
	680	13	30	30	2320	FH681M050I300A
	820	13	35	25	2520	FH821M050I350A
	820	16	20	34	2220	FH821M050J200A
	1000	13	35	24	2650	FH102M050I350A
	1000	13	40	21	2930	FH102M050I400A
	1000	16	25	25	2565	FH102M050J250A
	1000	18	20	36	2500	FH102M050K200A
	1200	16	31.5	30	3020	FH122M050J315A
	1200	18	25	26	2750	FH122M050K250A
	1500	16	35.5	19	3160	FH152M050J355A
	1800	16	40	16	3720	FH182M050J400A
	1800	18	31.5	21	3645	FH182M050K315A
	2200	18	35.5	17	3690	FH222M050K355A
	2700	18	40	14	3810	FH272M050K400A
	3300	18	40	14	3810	FH332M050K400A
63	15	5	11	1800	65	FH150M063C110A
	33	6.3	11	1200	260	FH330M063E110A
	47	8	11.5	660	360	FH470M063F115A
	56	8	11.5	600	380	FH560M063F115A
	82	8	16	440	460	FH820M063F160A
	82	10	12.5	430	500	FH820M063G125A
	100	10	12.5	340	640	FH101M063G125A
	120	8	20	320	700	FH121M063F200A
	120	10	16	300	760	FH121M063G160A
	180	10	20	190	880	FH181M063G200A
	180	13	16	180	800	FH181M063I160A
	220	10	20	188	995	FH221M063G200A
	220	10	25	185	1100	FH221M063G250A
	270	10	30	120	1200	FH271M063G300A
	270	13	20	160	1200	FH271M063I200A
	270	16	16	110	1200	FH271M063J160A
	330	13	25	120	1600	FH331M063I250A
	390	18	16	96	1610	FH391M063K160A
	470	13	30	100	1800	FH471M063I300A
	470	16	20	77	1500	FH471M063J200A
	560	13	35	70	2000	FH561M063I350A
	560	16	25	73	2000	FH561M063J250A
	680	13	40	70	2200	FH681M063I400A
	680	18	20	72	1600	FH681M063K200A
	820	16	31.5	54	2400	FH821M063J315A
	820	18	25	52	1800	FH821M063K250A

See "PACKAGING INFORMATION" to taped or formed products.

STANDARD RATINGS

Part number shows bulk version with straight leads

V_R (V)	C_R (µF)	ø D (mm)	L (mm)	Z ▪ Max. Impedance +20°C ▪ 100kHz (mΩ)	I_R ▪ Max. Ripple Current +105°C ▪ 100kHz (mA rms)	CapXon Part Number
63	1000	16	35.5	48	2500	FH102M063J355A
	1000	18	25	52	2290	FH102M063K250A
	1000	18	31.5	47	2800	FH102M063K315A
	1200	16	40	40	2920	FH122M063J400A
	1200	18	31.5	45	2850	FH122M063K315A
	1200	18	35.5	39	3000	FH122M063K355A
	1500	18	40	36	3200	FH152M063K400A
100	6.8	5	11	1800	65	FH6R8M100C110A
	15	6.3	11	1000	130	FH150M100E110A
	27	8	11.5	610	300	FH270M100F115A
	39	8	16	360	340	FH390M100F160A
	47	10	12.5	420	400	FH470M100G125A
	56	8	20	260	410	FH560M100F200A
	68	10	16	300	460	FH680M100G160A
	82	10	20	210	600	FH820M100G200A
	82	13	16	180	540	FH820M100I160A
	100	10	25	200	800	FH101M100G250A
	120	10	30	120	830	FH121M100G300A
	120	13	20	160	900	FH121M100I200A
	150	13	20	110	1000	FH151M100I200A
	150	16	16	110	1000	FH151M100J160A
	180	13	25	96	1010	FH181M100I250A
	180	18	16	96	1180	FH181M100K160A
	220	13	30	80	1210	FH221M100I300A
	220	16	20	77	1140	FH221M100J200A
	270	13	35	70	1450	FH271M100I350A
	270	16	25	73	1480	FH271M100J250A
	330	13	40	71	1600	FH331M100I400A
	330	18	20	72	1400	FH331M100K200A
	390	16	31.5	55	1700	FH391M100J315A
	390	18	25	54	1740	FH391M100K250A
	470	16	35.5	47	1910	FH471M100J355A
	470	18	31.5	47	1730	FH471M100K315A
	560	16	40	36	2140	FH561M100J400A
	680	18	35.5	42	2000	FH681M100K355A
	820	18	40	40	2480	FH821M100K400A
	1000	18	40	38	2580	FH102M100K400A

See "PACKAGING INFORMATION" to taped or formed products.

DIMENSIONS ▪ All dimensions in mm

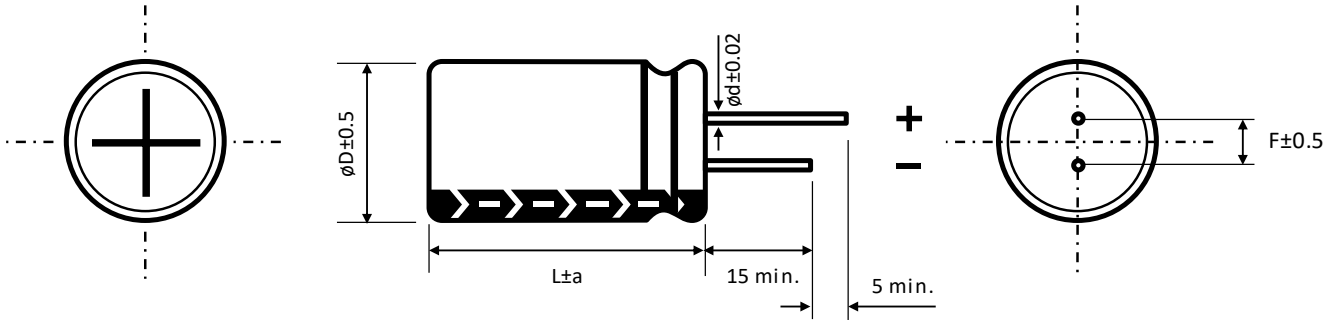

ø D	5	6.3	8		10	13	16	18
F	2	2.5	3.5		5	5	7.5	7.5
ø d	0.5		L < 20	L ≥ 20	0.6		0.8	
			0.5	0.6				

a	ø D < 16	ø D = 16		ø D = 18	
	1.5	L = 25 to 35.5	L < 25 and L ≥ 40	L = 25 to 31.5	L < 25 and L ≥ 35.5
		1.5	2	1.5	2

MULTIPLIER K_f for RIPPLE CURRENT vs. FREQUENCY

C_R (µF) / Frequency (Hz)	50/60	100/120	400	1k	10k	100k
$C_R \leq 10$	0.47	0.59	0.76	0.85	0.97	1
$10 < C_R \leq 100$	0.52	0.62	0.8	0.89	0.97	1
$100 < C_R \leq 1000$	0.58	0.72	0.84	0.9	0.98	1
$1000 \leq C_R$	0.63	0.78	0.87	0.91	0.98	1

PRECAUTIONS, GUIDELINES AND PACKAGING INFORMATON

Unless otherwise agreed in individual specifications, all products are subject to our “General Precautions and Guidelines” as well as our “Packaging Information”. Please refer to the following links in the table.

General Precautions and Guidelines	Packaging Information Liquid Radial
Page 837	Page 336

For further information please contact sales@capxon.org

DISCLAIMER

All product related data (e.g. specification, statements and general information) are subject to change without any notice. It is necessary that the customer observes all product related technical / application information and handling instructions.

CapXon products are designed and manufactured according to severe quality and safety standards. Under no circumstance, CapXon warrants that any CapXon product is suitable for the purposes intended for your application, even CapXon knows the application. It is customer's duty and obligation to check and make sure that CapXon products are suitable for the purposes intended and select the correct and proper CapXon product. Customers are requested to perform a sufficient validation and reliability evaluation to assure needed safety level and reliability performance by suitable designs and to apply proper safeguards (e.g. redundancies, protective circuits).

Particular operating conditions (ambient temperature, ripple current, voltage, thermal resistance, etc.) as well as storage, production or assembly may affect the performance and the lifetime of the capacitor. Please consult CapXon for lifetime estimation, failure mode considerations or worst-case scenarios according to the product technology, product tolerances / deviations or change of the characteristics of the capacitor due to shipment, storage, handling, production and usage.

For aerospace or military application, life-saving, life-sustaining, safety critical applications or any application where failure may cause severe personal injury or death, please consult us before design-in the capacitor in your application.

Except for the written expressed warranties, CapXon does not impliedly, by assumption or whatever else, warrant, undertake, promise any other warranty or guaranty for any CapXon product.

For further information, please visit our website www.capxongroup.com or contact CapXon directly.

LY SERIES ▪ LONG LIFE, SLIM SIZE 105°C TYPE



KEY FEATURES

SLIM TYPE LONG LIFE

- **ALUMINUM ELECTROLYTIC CAPACITOR** ▪ THT type
- Endurance: 105°C ▪ 5 000 hours
- Slim design for height limited applications
- High reliability
- High voltage version

SPECIFICATIONS

Items		Performance Characteristics					
Operating Temperature Range		-25 ~ +105°C					
Rated Voltage Range	V_R	250 ~ 450V DC					
Surge Voltage	V_S	($V_R \le 315V$): $V_S = 1.15 \cdot V_R$ ($V_R > 315V$): $V_S = 1.10 \cdot V_R$					
Capacitance Range	C_R	12 ~ 150µF					
Cap. Tolerance	ΔC	±20% (120Hz ▪ 20°C)					
Leakage Current (20°C ▪ V_R applied)	I_{LEAK}	≤ √3·C_R·V_R ▪ After 5 minutes [I_{LEAK} (µA) ; C_R (µF) ; V_R (V)]					
Dissipation Factor % (20°C ▪ 120Hz)	tanδ	V_R (V DC)	250	350	400	420	450
		tanδ (%)	15	15	15	20	20
Low Temperature Characteristics at 120Hz	Z ratio max.	V_R (V DC)	250	350	400	420	450
		Z-25°C/Z+20°C	3	8	8	8	8

Lifetime Test		
Endurance 105°C (V_R & I_R applied)	Test	**5 000 hours**
	△C/C_R	≤ ±20% of initial measured value
	tanδ	≤ 200% of initial specified value
	I_{Leak}	≤ the initial specified value
Shelf Life 105°C (V_R = 0)	Test	**1 000 hours**
	△C/C_R	≤ ±20% of initial measured value
	tanδ	≤ 200% of initial specified value
	I_{Leak}	≤ the initial specified value
	Before measurement: Restore capacitor to 20°C, apply V_R for 30 min according JIS-C-5101-4	

MULTIPLIER K_f for RIPPLE CURRENT vs. FREQUENCY

V_R (V) / Frequency (Hz)	50/60	100/120	400	1k	100k
250 ~ 350	0.8	1	1.2	1.3	1.4
400 ~ 450	0.8	1	1.25	1.4	1.5

For further information please contact sales@capxon.org

STANDARD RATINGS

Part number shows bulk version with straight leads

V_R (V)	C_R (µF)	ø D (mm)	L (mm)	I_R ▪ Max. Ripple Current +105°C ▪ 120Hz (mA rms)	CapXon Part Number
250	22	8	30	130	LY220M250F300A
	27	8	30	150	LY270M250F300A
	33	8	35	170	LY330M250F350A
	39	8	40	200	LY390M250F400A
	47	8	45	220	LY470M250F450A
	56	10	35	260	LY560M250G350A
	56	10	40	300	LY560M250G400A
	68	10	40	350	LY680M250G400A
	82	10	45	480	LY820M250G450A
	100	10	50	550	LY101M250G500A
	120	13	40	570	LY121M250I400A
	150	13	45	620	LY151M250I450A
350	15	8	30	110	LY150M350F300A
	22	8	35	150	LY220M350F350A
	27	8	40	165	LY270M350F400A
	33	8	45	195	LY330M350F450A
	39	10	40	280	LY390M350G400A
	47	10	45	330	LY470M350G450A
	56	10	50	380	LY560M350G500A
	68	13	35	425	LY680M350I350A
	68	13	40	450	LY680M350I400A
	82	13	40	500	LY820M350I400A
	100	13	50	520	LY101M350I500A
400	15	8	30	120	LY150M400F300A
	22	8	35	160	LY220M400F350A
	27	8	40	195	LY270M400F400A
	27	10	30	195	LY270M400G300A
	33	8	45	250	LY330M400F450A
	33	10	30	250	LY330M400G300A
	39	8	50	280	LY390M400F500A
	39	10	40	300	LY390M400G400A
	47	10	45	350	LY470M400G450A
	47	13	30	330	LY470M400I300A
	56	10	50	400	LY560M400G500A
	56	13	30	380	LY560M400I300A
	56	13	35	420	LY560M400I350A
	68	13	35	440	LY680M400I350A
	68	13	40	460	LY680M400I400A
	82	13	45	520	LY820M400I450A
	100	13	50	580	LY101M400I500A
	120	13	60	680	LY121M400I600A
420	15	8	30	100	LY150M420F300A
	22	8	40	180	LY220M420F400A
	27	8	45	200	LY270M420F450A

See "PACKAGING INFORMATION" to taped or formed products.

STANDARD RATINGS

Part number shows bulk version with straight leads

V_R (V)	C_R (µF)	ø D (mm)	L (mm)	I_R ▪ Max. Ripple Current +105°C ▪ 120Hz (mA rms)	CapXon Part Number
420	33	10	35	230	LY330M420G350A
	39	10	45	275	LY390M420G450A
	39	13	30	275	LY390M420I300A
	47	10	45	330	LY470M420G450A
	47	13	35	360	LY470M420I350A
	56	10	55	420	LY560M420G550A
	56	13	35	410	LY560M420I350A
	68	13	40	450	LY680M420I400A
	82	13	45	500	LY820M420I450A
	100	13	50	600	LY101M420I500A
450	12	8	30	110	LY120M450F300A
	15	8	35	120	LY150M450F350A
	22	8	45	160	LY220M450F450A
	22	10	30	150	LY220M450G300A
	27	8	50	190	LY270M450F500A
	27	10	35	180	LY270M450G350A
	33	10	40	220	LY330M450G400A
	33	10	45	235	LY330M450G450A
	33	10	50	250	LY330M450G500A
	39	10	45	260	LY390M450G450A
	39	10	50	290	LY390M450G500A
	39	13	35	290	LY390M450I350A
	47	10	55	350	LY470M450G550A
	47	13	35	350	LY470M450I350A
	56	13	35	400	LY560M450I350A
	56	13	40	425	LY560M450I400A
	68	13	45	470	LY680M450I450A
	68	13	50	500	LY680M450I500A
	82	13	50	530	LY820M450I500A

See "PACKAGING INFORMATION" to taped or formed products.

DIMENSIONS ▪ All dimensions in mm

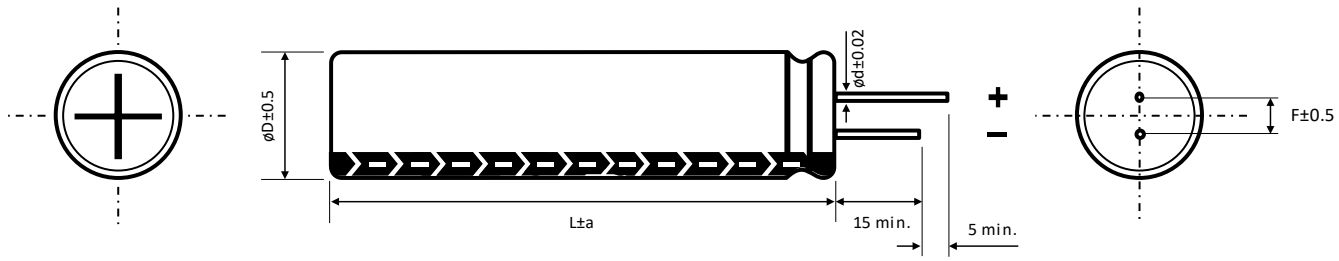

ø D	8	10	13
F	3.5	5	5
ø d	0.5	0.6	0.6
a	1.5	2	2

For further information please contact sales@capxon.org

PRECAUTIONS, GUIDELINES AND PACKAGING INFORMATON

Unless otherwise agreed in individual specifications, all products are subject to our “General Precautions and Guidelines” as well as our “Packaging Information”. Please refer to the following links in the table.

General Precautions and Guidelines	Packaging Information Liquid Radial
Page 837	Page 336

DISCLAIMER

All product related data (e.g. specification, statements and general information) are subject to change without any notice. It is necessary that the customer observes all product related technical / application information and handling instructions.

CapXon products are designed and manufactured according to severe quality and safety standards. Under no circumstance, CapXon warrants that any CapXon product is suitable for the purposes intended for your application, even CapXon knows the application. It is customer's duty and obligation to check and make sure that CapXon products are suitable for the purposes intended and select the correct and proper CapXon product. Customers are requested to perform a sufficient validation and reliability evaluation to assure needed safety level and reliability performance by suitable designs and to apply proper safeguards (e.g. redundancies, protective circuits).

Particular operating conditions (ambient temperature, ripple current, voltage, thermal resistance, etc.) as well as storage, production or assembly may affect the performance and the lifetime of the capacitor. Please consult CapXon for lifetime estimation, failure mode considerations or worst-case scenarios according to the product technology, product tolerances / deviations or change of the characteristics of the capacitor due to shipment, storage, handling, production and usage.

For aerospace or military application, life-saving, life-sustaining, safety critical applications or any application where failure may cause severe personal injury or death, please consult us before design-in the capacitor in your application.

Except for the written expressed warranties, CapXon does not impliedly, by assumption or whatever else, warrant, undertake, promise any other warranty or guaranty for any CapXon product.

For further information, please visit our website www.capxongroup.com or contact CapXon directly.

KL SERIES ▪ HIGH VOLTAGE, AUTOMOTIVE 105°C TYPE



KEY FEATURES

AEC-Q 200 · LONG LIFE · HIGH VOLTAGE

- **ALUMINUM ELECTROLYTIC CAPACITOR** ▪ THT type
- Endurance: 105°C ▪ 5000 hours
- High voltage version up to 500V
- High reliability
- AEC-Q200 version available

HF Halogen Free · RoHS & REACH COMPLIANT

SPECIFICATIONS

Items		Performance Characteristics							
Operating Temperature Range		-40 ~ +105°C				-25 ~ +105°C			
Rated Voltage Range	V_R	160 ~ 400V DC				450V ~ 500V DC			
Surge Voltage	V_S	($V_R \le 315V$): $V_S = 1.15 \cdot V_R$				($V_R > 315V$): $V_S = 1.10 \cdot V_R$			
Capacitance Range	C_R	3.3 ~ 330µF				2.2 ~ 180µF			
Cap. Tolerance	ΔC	±20% (120Hz ▪ 20°C)							
Leakage Current (20°C ▪ V_R applied)	I_{LEAK}	$C_R \cdot V_R \le 1000$				$\le 0.1 \cdot C_R \cdot V_R + 40µA$ (After 1 minute)			
		$C_R \cdot V_R > 1000$				$\le 0.04 \cdot C_R \cdot V_R + 100µA$ (After 1 minute)			
		[I_{LEAK} (µA) ; C_R (µF) ; V_R (V)]							
Dissipation Factor % (20°C ▪ 120Hz)	tanδ	V_R (V DC)	160	200	250	350	400	450	500
		tanδ (%)	12	12	12	15	15	17	20
Low Temperature Characteristics at 120Hz	Z ratio max.	V_R (V DC)	160	200	250	350	400	450	500
		Z-25°C/Z+20°C	3	3	3	6	6	6	6
		Z-40°C/Z+20°C	6	6	6	6	6	-	-

Lifetime Test		
Endurance 105°C (V_R & I_R applied)	Test	**5000 hours**
	△C/C_R	≤ ±20% of initial measured value
	tanδ	≤ 200% of initial specified value
	I_{Leak}	≤ the initial specified value
Shelf Life 105°C (V_R = 0)	Test	**1000 hours**
	△C/C_R	≤ ±20% of initial measured value
	tanδ	≤ 200% of initial specified value
	I_{Leak}	≤ the initial specified value
	Before measurement: Restore capacitor to 20°C, apply V_R for 30 min according JIS-C-5101-4	

For further information please contact sales@capxon.org

STANDARD RATINGS

Part number shows bulk version with straight leads

V_R (V)	C_R (µF)	ø D (mm)	L (mm)	I_R ▪ Max. Ripple Current +105°C ▪ 120Hz (mA rms)	CapXon Part Number
160	3.3	10	12.5	52	KL3R3M160G125A ☐
	4.7	10	12.5	60	KL4R7M160G125A ☐
	10	10	12.5	104	KL100M160G125A ☐
	10	10	16	115	KL100M160G160A ☐
	15	10	16	150	KL150M160G160A ☐
	22	10	16	190	KL220M160G160A ☐
	22	10	20	210	KL220M160G200A ☐
	33	10	16	235	KL330M160G160A ☐
	33	10	20	258	KL330M160G200A ☐
	33	13	20	300	KL330M160I200A ☐
	47	10	20	270	KL470M160G200A ☐
	47	13	20	310	KL470M160I200A ☐
	68	13	20	430	KL680M160I200A ☐
	68	13	25	470	KL680M160I250A ☐
	100	13	25	540	KL101M160I250A ☐
	100	16	20	540	KL101M160J200A ☐
	100	16	25	590	KL101M160J250A ☐
	120	16	20	560	KL121M160J200A ☐
	150	16	25	650	KL151M160J250A ☐
	180	16	31.5	750	KL181M160J315A ☐
	220	16	31.5	820	KL221M160J315A ☐
	220	18	25	710	KL221M160K250A ☐
	270	18	31.5	880	KL271M160K315A ☐
	330	18	31.5	930	KL331M160K315A ☐
	330	18	40	1000	KL331M160K400A ☐
200	3.3	10	12.5	52	KL3R3M200G125A ☐
	4.7	10	12.5	60	KL4R7M200G125A ☐
	6.8	10	12.5	70	KL6R8M200G125A ☐
	10	10	12.5	104	KL100M200G125A ☐
	10	10	16	115	KL100M200G160A ☐
	10	10	20	125	KL100M200G200A ☐
	15	10	16	150	KL150M200G160A ☐
	22	10	16	210	KL220M200G160A ☐
	22	10	20	230	KL220M200G200A ☐
	33	10	20	290	KL330M200G200A ☐
	33	13	20	350	KL330M200I200A ☐
	47	13	20	380	KL470M200I200A ☐
	68	13	25	530	KL680M200I250A ☐
	68	16	20	530	KL680M200J200A ☐
	100	16	20	570	KL101M200J200A ☐
	100	16	25	610	KL101M200J250A ☐
	120	16	25	700	KL121M200J250A ☐
	150	16	25	700	KL151M200J250A ☐

☐: Enter **blank** for Standard version ☐: Enter **X** for AEC-Q200 version

See "PACKAGING INFORMATION" to taped or formed products.

STANDARD RATINGS

Part number shows bulk version with straight leads

V_R (V)	C_R (µF)	ø D (mm)	L (mm)	I_R ▪ Max. Ripple Current +105°C ▪ 120Hz (mA rms)	CapXon Part Number
200	150	16	31.5	750	KL151M200J315A ☐☐
	180	18	31.5	830	KL181M200K315A ☐☐
	220	18	31.5	970	KL221M200K315A ☐☐
	270	18	40	1100	KL271M200K400A ☐☐
	330	18	45	1250	KL331M200K450A ☐☐
250	4.7	10	12.5	60	KL4R7M250G125A ☐☐
	6.8	10	12.5	75	KL6R8M250G125A ☐☐
	10	10	16	160	KL100M250G160A ☐☐
	10	10	20	170	KL100M250G200A ☐☐
	15	10	16	180	KL150M250G160A ☐☐
	22	10	20	250	KL220M250G200A ☐☐
	22	13	20	290	KL220M250I200A ☐☐
	33	13	20	360	KL330M250I200A ☐☐
	33	13	25	380	KL330M250I250A ☐☐
	47	13	25	430	KL470M250I250A ☐☐
	68	16	20	530	KL680M250J200A ☐☐
	68	16	25	550	KL680M250J250A ☐☐
	68	18	20	550	KL680M250K200A ☐☐
	100	16	25	630	KL101M250J250A ☐☐
	100	16	31.5	700	KL101M250J315A ☐☐
	100	18	25	680	KL101M250K250A ☐☐
	100	18	31.5	750	KL101M250K315A ☐☐
	120	18	31.5	790	KL121M250K315A ☐☐
	150	18	31.5	840	KL151M250K315A ☐☐
	150	18	35.5	880	KL151M250K355A ☐☐
	180	18	40	980	KL181M250K400A ☐☐
	220	18	35.5	960	KL221M250K355A ☐☐
	220	18	40	1020	KL221M250K400A ☐☐
350	4.7	10	12.5	65	KL4R7M350G125A ☐☐
	6.8	10	16	100	KL6R8M350G160A ☐☐
	10	10	20	170	KL100M350G200A ☐☐
	10	13	20	180	KL100M350I200A ☐☐
	15	13	20	200	KL150M350I200A ☐☐
	22	13	20	290	KL220M350I200A ☐☐
	33	13	25	320	KL330M350I250A ☐☐
	33	16	20	320	KL330M350J200A ☐☐
	47	16	25	430	KL470M350J250A ☐☐
	47	16	31.5	440	KL470M350J315A ☐☐
	68	16	35.5	550	KL680M350J355A ☐☐
	100	18	31.5	750	KL101M350K315A ☐☐
	100	18	35.5	780	KL101M350K355A ☐☐
400	3.3	10	12.5	55	KL3R3M400G125A ☐☐
	4.7	10	16	100	KL4R7M400G160A ☐☐

☐: Enter **blank** for Standard version ☐: Enter **X** for AEC-Q200 version

See "PACKAGING INFORMATION" to taped or formed products.

For further information please contact sales@capxon.org

STANDARD RATINGS

Part number shows bulk version with straight leads

V_R (V)	C_R (µF)	ø D (mm)	L (mm)	I_R ▪ Max. Ripple Current +105°C ▪ 120Hz (mA rms)	CapXon Part Number
400	6.8	10	16	120	KL6R8M400G160A ☐☐
	6.8	10	20	125	KL6R8M400G200A ☐☐
	10	10	16	156	KL100M400G160A ☐☐
	10	10	20	170	KL100M400G200A ☐☐
	10	13	20	200	KL100M400I200A ☐☐
	15	10	16	156	KL150M400G160A ☐☐
	15	13	20	200	KL150M400I200A ☐☐
	22	13	25	320	KL220M400I250A ☐☐
	22	16	20	320	KL220M400J200A ☐☐
	33	16	20	400	KL330M400J200A ☐☐
	33	16	25	430	KL330M400J250A ☐☐
	47	16	20	420	KL470M400J200A ☐☐
	47	16	25	450	KL470M400J250A ☐☐
	47	16	31.5	530	KL470M400J315A ☐☐
	68	16	25	480	KL680M400J250A ☐☐
	68	16	31.5	530	KL680M400J315A ☐☐
	82	16	31.5	580	KL820M400J315A ☐☐
	100	16	31.5	710	KL101M400J315A ☐☐
	100	18	35.5	750	KL101M400K355A ☐☐
	120	16	35.5	800	KL121M400J355A ☐☐
	120	18	31.5	800	KL121M400K315A ☐☐
	150	16	40	920	KL151M400J400A ☐☐
	150	18	31.5	890	KL151M400K315A ☐☐
	180	18	40	1060	KL181M400K400A ☐☐
	220	18	45	1200	KL221M400K450A ☐☐
450	2.2	10	12.5	45	KL2R2M450G125A ☐☐
	3.3	10	16	65	KL3R3M450G160A ☐☐
	4.7	10	12.5	95	KL4R7M450G125A ☐☐
	4.7	10	16	105	KL4R7M450G160A ☐☐
	6.8	10	16	125	KL6R8M450G160A ☐☐
	6.8	10	20	140	KL6R8M450G200A ☐☐
	10	10	20	170	KL100M450G200A ☐☐
	10	13	20	190	KL100M450I200A ☐☐
	10	13	25	220	KL100M450I250A ☐☐
	15	16	20	270	KL150M450J200A ☐☐
	22	13	20	280	KL220M450I200A ☐☐
	22	16	20	320	KL220M450J200A ☐☐
	22	16	25	360	KL220M450J250A ☐☐
	33	16	25	440	KL330M450J250A ☐☐
	33	18	25	460	KL330M450K250A ☐☐
	47	16	31.5	480	KL470M450J315A ☐☐
	47	18	25	450	KL470M450K250A ☐☐
	56	16	31.5	530	KL560M450J315A ☐☐

☐: Enter **blank** for Standard version ☐: Enter **X** for AEC-Q200 version

See "PACKAGING INFORMATION" to taped or formed products.

For further information please contact sales@capxon.org

STANDARD RATINGS

Part number shows bulk version with straight leads

V_R (V)	C_R (µF)	ø D (mm)	L (mm)	I_R ▪ Max. Ripple Current +105°C ▪ 120Hz (mA rms)	CapXon Part Number
450	68	16	35.5	600	KL680M450J355A [ ]
	68	18	25	580	KL680M450K250A [ ] [ ]
	68	18	31.5	620	KL680M450K315A [ ] [ ]
	82	16	35.5	680	KL820M450J355A [ ] [ ]
	100	16	35.5	750	KL101M450J355A [ ] [ ]
	120	18	35.5	840	KL121M450K355A [ ] [ ]
	150	18	40	970	KL151M450K400A [ ] [ ]
	180	18	45	1090	KL181M450K450A [ ] [ ]
500	4.7	13	20	82	KL4R7M500I200A [ ]
	6.8	13	20	96	KL6R8M500I200A [ ]
	10	13	25	130	KL100M500I250A [ ]
	22	16	25	210	KL220M500J250A [ ] [ ]
	33	16	31.5	280	KL330M500J315A [ ] [ ]
	47	16	35.5	360	KL470M500J355A [ ] [ ]
	47	18	31.5	360	KL470M500K315A [ ] [ ]
	56	16	40	420	KL560M500J400A [ ] [ ]
	56	18	31.5	400	KL560M500K315A [ ] [ ]
	68	16	45	480	KL680M500J450A [ ] [ ]
	68	18	35.5	460	KL680M500K355A [ ] [ ]
	68	18	40	490	KL680M500K400A [ ] [ ]
	82	18	40	540	KL820M500K400A [ ] [ ]
	100	18	45	630	KL101M500K450A [ ] [ ]
	100	20	40	660	KL101M500L400A [ ]
	120	22	45	800	KL121M500M450A [ ]

[ ]: Enter **blank** for Standard version [ ]: Enter **X** for AEC-Q200 version

See "PACKAGING INFORMATION" to taped or formed products.

For further information please contact sales@capxon.org

DIMENSIONS ▪ All dimensions in mm

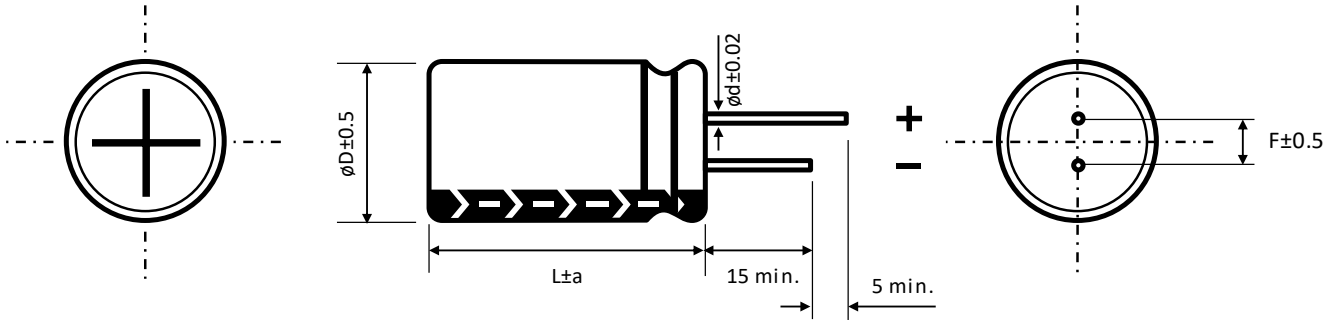

ø D	10	13	16	18	22
F	5	5	7.5	7.5	10
ø d	0.6		0.8		

a	ø D < 16	ø D = 16		ø D = 18		ø D > 18
	1.5	L = 25 to 35.5	L < 25 and L ≥ 40	L = 25 to 31.5	L < 25 and L ≥ 35.5	2
		1.5	2	1.5	2	

MULTIPLIER K_f for RIPPLE CURRENT vs. FREQUENCY

C_R (µF) / Frequency (Hz)	100/120	1k	10k	≥ 50k
$3.3 < C_R \leq 330$	1	1.5	1.7	1.9

PRECAUTIONS, GUIDELINES AND PACKAGING INFORMATON

Unless otherwise agreed in individual specifications, all products are subject to our “General Precautions and Guidelines” as well as our “Packaging Information”. Please refer to the following links in the table.

General Precautions and Guidelines	Packaging Information Liquid Radial
Page 837	Page 336

For further information please contact sales@capxon.org

DISCLAIMER

All product related data (e.g. specification, statements and general information) are subject to change without any notice. It is necessary that the customer observes all product related technical / application information and handling instructions.

CapXon products are designed and manufactured according to severe quality and safety standards. Under no circumstance, CapXon warrants that any CapXon product is suitable for the purposes intended for your application, even CapXon knows the application. It is customer's duty and obligation to check and make sure that CapXon products are suitable for the purposes intended and select the correct and proper CapXon product. Customers are requested to perform a sufficient validation and reliability evaluation to assure needed safety level and reliability performance by suitable designs and to apply proper safeguards (e.g. redundancies, protective circuits).

Particular operating conditions (ambient temperature, ripple current, voltage, thermal resistance, etc.) as well as storage, production or assembly may affect the performance and the lifetime of the capacitor. Please consult CapXon for lifetime estimation, failure mode considerations or worst-case scenarios according to the product technology, product tolerances / deviations or change of the characteristics of the capacitor due to shipment, storage, handling, production and usage.

For aerospace or military application, life-saving, life-sustaining, safety critical applications or any application where failure may cause severe personal injury or death, please consult us before design-in the capacitor in your application.

Except for the written expressed warranties, CapXon does not impliedly, by assumption or whatever else, warrant, undertake, promise any other warranty or guaranty for any CapXon product.

For further information, please visit our website www.capxongroup.com or contact CapXon directly.

GH SERIES ▪ LOW IMPEDANCE, AUTOMOTIVE 105°C TYPE



KEY FEATURES

AEC-Q 200 LOW IMPEDANCE

- **ALUMINUM ELECTROLYTIC CAPACITOR** ▪ THT type
- Endurance: 105°C ▪ 3000 hours up to 10000 hours
- Low impedance and high ripple current
- Wide capacitance range
- AEC-Q200 version available

HF Halogen Free RoHS & REACH COMPLIANT

SPECIFICATIONS

Items		Performance Characteristics								
Operating Temperature Range		-55 ~ +105°C								
Rated Voltage Range	V_R	6.3 ~ 100V DC								
Surge Voltage	V_S	$V_S = 1.15 \cdot V_R$								
Capacitance Range	C_R	0.47 ~ 12000µF								
Cap. Tolerance	ΔC	±20% (120Hz ▪ 20°C)								
Leakage Current (20°C ▪ V_R applied)	I_{LEAK}	≤ $0.01 \cdot C_R \cdot V_R$ or 3µA, whichever is greater ▪ After 2 minutes [I_{LEAK} (µA) ; C_R (µF) ; V_R (V)]								
Dissipation Factor % (20°C ▪ 120Hz)	tanδ	V_R (V DC)	6.3	10	16	25	35	50	63	80	100
		tanδ (%)	22	19	16	14	12	10	9	9	10
		For C_R ≥ 1000µF, add 2% per every multiple 1000µF of rated capacitance value									
Low Temperature Characteristics at 120Hz	Z ratio max.	V_R (V DC)	6.3	10	16	25	35	50	63	80	100
		Z-25°C/Z+20°C	4	3	2	2	1.5	1.5	1.5	1.5	1.5
		Z-40°C/Z+20°C	6	4	3	3	2	2	2	2	2
		Z-55°C/Z+20°C	8	6	5	5	4	4	4	4	4
		For capacitance > 1000µF									
		Z-25°C/Z+20°C	Add 0.5 for every multiple 1000µF of rated capacitance value								
		Z-40°C/Z+20°C	Add 1 for every multiple 1000µF of rated capacitance value								
		Z-55°C/Z+20°C	Add 1.5 for every multiple 1000µF of rated capacitance value								

Lifetime Test			
Endurance 105°C (V_R & I_R applied)	Test	**5000 hours**	ø D 5 ~ 6.3 mm
		7000 hours	ø D 8 ~ 12 mm
		10000 hours	ø D ≥ 13 mm
	△C/C_R	≤ ±25% of initial measured value	
	tanδ	≤ 200% of initial specified value	
	I_{Leak}	≤ the initial specified value	
Shelf Life 105°C (V_R = 0)	Test	**1000 hours**	
	△C/C_R	≤ ±25% of initial measured value	
	tanδ	≤ 200% of initial specified value	
	I_{Leak}	≤ the initial specified value	
	Before measurement: Restore capacitor to 20°C, apply V_R for 30 min according JIS-C-5101-4		

For further information please contact sales@capxon.org

STANDARD RATINGS

Part number shows bulk version with straight leads

V_R (V)	C_R (µF)	ø D (mm)	L (mm)	Z ▪ Max. Impedance +20°C ▪ 100kHz (mΩ)	I_R ▪ Max. Ripple Current +105°C ▪ 100kHz (mA rms)	CapXon Part Number
6.3	82	5	11	1630	198	GH820M6R3C110A ☐☐
	100	5	11	1450	210	GH101M6R3C110A ☐☐
	120	5	11	1280	222	GH121M6R3C110A ☐☐
	150	6.3	11	1160	240	GH151M6R3E110A ☐☐
	180	6.3	11	1040	282	GH181M6R3E110A ☐☐
	220	6.3	11	890	378	GH221M6R3E110A ☐☐
	270	6.3	11	770	396	GH271M6R3E110A ☐☐
	330	6.3	11	770	396	GH331M6R3E110A ☐☐
	330	6.3	15	680	426	GH331M6R3E150A ☐☐
	330	8	11.5	680	444	GH331M6R3F115A ☐☐
	390	6.3	15	580	462	GH391M6R3E150A ☐☐
	390	8	11.5	520	480	GH391M6R3F115A ☐☐
	470	6.3	15	410	504	GH471M6R3E150A ☐☐
	470	8	11.5	380	534	GH471M6R3F115A ☐☐
	470	10	12.5	380	564	GH471M6R3G125A ☐☐
	560	8	11.5	360	570	GH561M6R3F115A ☐☐
	560	8	16	360	600	GH561M6R3F160A ☐☐
	560	10	12.5	360	612	GH561M6R3G125A ☐☐
	680	8	11.5	330	582	GH681M6R3F115A ☐☐
	680	8	16	330	618	GH681M6R3F160A ☐☐
	680	10	12.5	330	642	GH681M6R3G125A ☐☐
	820	8	11.5	250	666	GH821M6R3F115A ☐☐
	820	10	12.5	250	720	GH821M6R3G125A ☐☐
	1000	8	16	220	690	GH102M6R3F160A ☐☐
	1000	8	20	220	756	GH102M6R3F200A ☐☐
	1000	10	12.5	220	708	GH102M6R3G125A ☐☐
	1200	8	20	180	840	GH122M6R3F200A ☐☐
	1200	10	16	180	888	GH122M6R3G160A ☐☐
	1500	8	20	150	1056	GH152M6R3F200A ☐☐
	1500	10	16	120	1128	GH152M6R3G160A ☐☐
	1500	10	20	120	1176	GH152M6R3G200A ☐☐
	1800	8	25	110	1230	GH182M6R3F250A ☐☐
	1800	10	20	110	1308	GH182M6R3G200A ☐☐
	2200	10	20	100	1350	GH222M6R3G200A ☐☐
	2200	10	25	100	1362	GH222M6R3G250A ☐☐
	2700	10	25	90	1488	GH272M6R3G250A ☐☐
	2700	10	30	90	1560	GH272M6R3G300A ☐☐
	2700	13	20	90	1512	GH272M6R3I200A ☐☐
	3300	10	30	85	1620	GH332M6R3G300A ☐☐
	3300	13	20	85	1584	GH332M6R3I200A ☐☐
	3900	13	25	80	1860	GH392M6R3I250A ☐☐
	4700	13	25	75	1938	GH472M6R3I250A ☐☐
	4700	13	30	70	1992	GH472M6R3I300A ☐☐

☐: Enter **blank** for Standard version ☐: Enter **X** for AEC-Q200 version

See "PACKAGING INFORMATION" to taped or formed products.

For further information please contact sales@capxon.org

STANDARD RATINGS

Part number shows bulk version with straight leads

V_R (V)	C_R (µF)	ø D (mm)	L (mm)	Z ▪ Max. Impedance +20°C ▪ 100kHz (mΩ)	I_R ▪ Max. Ripple Current +105°C ▪ 100kHz (mA rms)	CapXon Part Number
6.3	5600	13	30	68	1992	GH562M6R3I300A ☐
	5600	16	25	68	2196	GH562M6R3J250A ☐ ☐
	6800	13	30	63	2520	GH682M6R3I300A ☐
	6800	16	25	63	2718	GH682M6R3J250A ☐ ☐
10	22	5	11	3080	66	GH220M010C110A ☐ ☐
	27	5	11	2670	72	GH270M010C110A ☐ ☐
	33	5	11	2330	72	GH330M010C110A ☐ ☐
	39	5	11	2020	120	GH390M010C110A ☐ ☐
	47	5	11	1710	132	GH470M010C110A ☐ ☐
	56	5	11	1470	144	GH560M010C110A ☐ ☐
	68	5	11	1300	162	GH680M010C110A ☐ ☐
	82	5	11	1150	192	GH820M010C110A ☐ ☐
	100	5	11	1020	222	GH101M010C110A ☐ ☐
	100	6.3	11	1020	240	GH101M010E110A ☐ ☐
	120	5	11	1020	246	GH121M010C110A ☐ ☐
	120	6.3	11	1020	258	GH121M010E110A ☐ ☐
	150	6.3	11	950	282	GH151M010E110A ☐ ☐
	180	6.3	11	680	318	GH181M010E110A ☐ ☐
	220	6.3	11	600	366	GH221M010E110A ☐ ☐
	220	6.3	15	580	390	GH221M010E150A ☐ ☐
	270	6.3	15	560	414	GH271M010E150A ☐ ☐
	270	8	11.5	530	420	GH271M010F115A ☐ ☐
	330	6.3	11	500	402	GH331M010E110A ☐ ☐
	330	6.3	15	470	462	GH331M010E150A ☐ ☐
	330	8	11.5	450	492	GH331M010F115A ☐ ☐
	390	6.3	15	420	456	GH391M010E150A ☐ ☐
	390	8	11.5	420	516	GH391M010F115A ☐ ☐
	470	6.3	15	370	480	GH471M010E150A ☐ ☐
	470	8	11.5	300	552	GH471M010F115A ☐ ☐
	560	8	11.5	280	588	GH561M010F115A ☐ ☐
	560	8	16	250	636	GH561M010F160A ☐ ☐
	560	10	12.5	250	636	GH561M010G125A ☐ ☐
	680	8	16	210	660	GH681M010F160A ☐ ☐
	680	8	20	200	684	GH681M010F200A ☐ ☐
	680	10	12.5	200	684	GH681M010G125A ☐ ☐
	820	8	16	200	732	GH821M010F160A ☐ ☐
	820	8	20	180	828	GH821M010F200A ☐ ☐
	820	10	12.5	160	876	GH821M010G125A ☐ ☐
	820	10	16	160	936	GH821M010G160A ☐ ☐
	1000	8	16	160	1020	GH102M010F160A ☐ ☐
	1000	8	20	140	1122	GH102M010F200A ☐ ☐
	1000	10	12.5	140	1032	GH102M010G125A ☐ ☐
	1000	10	16	130	1140	GH102M010G160A ☐ ☐

☐: Enter **blank** for Standard version ☐: Enter **X** for AEC-Q200 version

See "PACKAGING INFORMATION" to taped or formed products.

For further information please contact sales@capxon.org

STANDARD RATINGS

Part number shows bulk version with straight leads

V_R (V)	C_R (µF)	ø D (mm)	L (mm)	Z ▪ Max. Impedance +20°C ▪ 100kHz (mΩ)	I_R ▪ Max. Ripple Current +105°C ▪ 100kHz (mA rms)	CapXon Part Number
10	1200	8	20	130	1248	GH122M010F200A [ ]
	1200	10	16	130	1272	GH122M010G160A [ ] [ ]
	1200	10	20	120	1368	GH122M010G200A [ ] [ ]
	1500	10	20	106	1536	GH152M010G200A [ ] [ ]
	1500	13	16	110	1619	GH152M010I160A [ ]
	1800	10	25	102	1650	GH182M010G250A [ ] [ ]
	1800	13	20	98	1704	GH182M010I200A [ ]
	2200	10	25	95	1776	GH222M010G250A [ ] [ ]
	2200	10	30	93	1860	GH222M010G300A [ ] [ ]
	2200	13	20	93	1872	GH222M010I200A [ ] [ ]
	2200	16	16	93	1926	GH222M010J160A [ ] [ ]
	2700	10	30	84	2076	GH272M010G300A [ ] [ ]
	2700	13	20	84	2028	GH272M010I200A [ ] [ ]
	2700	13	25	84	2124	GH272M010I250A [ ] [ ]
	2700	18	16	84	2240	GH272M010K160A [ ] [ ]
	3300	10	30	70	2232	GH332M010G300A [ ] [ ]
	3300	13	25	70	2268	GH332M010I250A [ ] [ ]
	3300	16	25	70	2316	GH332M010J250A [ ] [ ]
	3900	13	25	65	2304	GH392M010I250A [ ] [ ]
	3900	13	30	65	2376	GH392M010I300A [ ] [ ]
	3900	16	20	70	2362	GH392M010J200A [ ] [ ]
	3900	16	25	65	2544	GH392M010J250A [ ] [ ]
	4700	13	30	65	2484	GH472M010I300A [ ] [ ]
	4700	13	35	60	2568	GH472M010I350A [ ] [ ]
	4700	16	25	57	2634	GH472M010J250A [ ] [ ]
	5600	13	35	54	2640	GH562M010I350A [ ] [ ]
	5600	16	25	54	2472	GH562M010J250A [ ] [ ]
	5600	16	31.5	50	2736	GH562M010J315A [ ] [ ]
	5600	18	20	57	2459	GH562M010K200A [ ] [ ]
	6800	16	31.5	46	2964	GH682M010J315A [ ] [ ]
	6800	18	25	52	2865	GH682M010K250A [ ] [ ]
	8200	16	35.5	43	3350	GH822M010J355A [ ] [ ]
	8200	18	31.5	44	3392	GH822M010K315A [ ] [ ]
	10000	16	40	40	3850	GH103M010J400A [ ] [ ]
	10000	18	35.5	41	3850	GH103M010K355A [ ] [ ]
	12000	18	40	37	4150	GH123M010K400A [ ] [ ]
16	10	5	11	3900	36	GH100M016C110A [ ] [ ]
	15	5	11	3320	72	GH150M016C110A [ ] [ ]
	22	5	11	2640	72	GH220M016C110A [ ] [ ]
	27	5	11	2370	132	GH270M016C110A [ ] [ ]
	33	5	11	2000	144	GH330M016C110A [ ] [ ]
	39	5	11	1610	168	GH390M016C110A [ ] [ ]
	47	5	11	1350	186	GH470M016C110A [ ]

[ ]: Enter **blank** for Standard version [ ]: Enter **X** for AEC-Q200 version

See "PACKAGING INFORMATION" to taped or formed products.

For further information please contact sales@capxon.org

STANDARD RATINGS

Part number shows bulk version with straight leads

V_R (V)	C_R (µF)	ø D (mm)	L (mm)	Z ▪ Max. Impedance +20°C ▪ 100kHz (mΩ)	I_R ▪ Max. Ripple Current +105°C ▪ 100kHz (mA rms)	CapXon Part Number
16	56	5	11	1240	210	GH560M016C110A [ ]
	68	5	11	1180	228	GH680M016C110A [ ]
	82	6.3	11	1030	264	GH820M016E110A [ ]
	100	5	11	1100	228	GH101M016C110A [ ]
	100	6.3	11	860	264	GH101M016E110A [ ]
	120	6.3	11	660	312	GH121M016E110A [ ]
	150	6.3	11	580	336	GH151M016E110A [ ]
	150	6.3	15	580	396	GH151M016E150A [ ]
	180	6.3	15	560	420	GH181M016E150A [ ]
	180	8	11.5	540	426	GH181M016F115A [ ]
	220	6.3	15	520	504	GH221M016E150A [ ]
	220	8	11.5	460	540	GH221M016F115A [ ]
	270	6.3	15	420	540	GH271M016E150A [ ]
	270	8	11.5	380	582	GH271M016F115A [ ]
	330	6.3	15	340	588	GH331M016E150A [ ]
	330	8	11.5	370	588	GH331M016F115A [ ]
	330	8	16	350	618	GH331M016F160A [ ]
	390	8	11.5	330	612	GH391M016F115A [ ]
	390	8	16	330	654	GH391M016F160A [ ]
	390	10	12.5	330	648	GH391M016G125A [ ]
	470	8	16	290	846	GH471M016F160A [ ]
	470	8	20	280	900	GH471M016F200A [ ]
	470	10	12.5	280	882	GH471M016G125A [ ]
	560	8	16	260	864	GH561M016F160A [ ]
	560	8	20	240	936	GH561M016F200A [ ]
	560	10	12.5	240	882	GH561M016G125A [ ]
	560	10	16	200	960	GH561M016G160A [ ]
	680	8	20	200	960	GH681M016F200A [ ]
	680	10	16	180	1044	GH681M016G160A [ ]
	820	8	20	170	1104	GH821M016F200A [ ]
	820	10	16	150	1254	GH821M016G160A [ ]
	820	10	20	150	1320	GH821M016G200A [ ]
	1000	10	16	140	1404	GH102M016G160A [ ]
	1000	10	20	120	1476	GH102M016G200A [ ]
	1200	10	20	130	1500	GH122M016G200A [ ]
	1200	10	25	110	1578	GH122M016G250A [ ]
	1500	10	25	96	1620	GH152M016G250A [ ]
	1500	13	20	95	1728	GH152M016I200A [ ]
	1500	16	16	95	1778	GH152M016J160A [ ]
	1800	10	30	97	1776	GH182M016G300A [ ]
	1800	13	20	94	1854	GH182M016I200A [ ]
	1800	13	25	90	1956	GH182M016I250A [ ]
	2200	13	20	90	2082	GH222M016I200A [ ]

[ ]: Enter **blank** for Standard version [ ]: Enter **X** for AEC-Q200 version

See "PACKAGING INFORMATION" to taped or formed products.

For further information please contact sales@capxon.org

STANDARD RATINGS

Part number shows bulk version with straight leads

V_R (V)	C_R (µF)	ø D (mm)	L (mm)	Z ▪ Max. Impedance +20°C ▪ 100kHz (mΩ)	I_R ▪ Max. Ripple Current +105°C ▪ 100kHz (mA rms)	CapXon Part Number
16	2200	13	25	85	2340	GH222M016I250A ☐
	2200	18	16	90	2300	GH222M016K160A ☐
	2700	13	25	76	2436	GH272M016I250A ☐
	2700	13	30	72	2496	GH272M016I300A ☐
	2700	16	20	74	2362	GH272M016J200A ☐
	2700	16	25	72	2544	GH272M016J250A ☐
	3300	13	30	68	2562	GH332M016I300A ☐
	3300	13	35	66	2628	GH332M016I350A ☐
	3300	16	25	64	2700	GH332M016J250A ☐
	3900	13	35	50	2664	GH392M016I350A ☐
	3900	16	25	60	2736	GH392M016J250A ☐
	3900	16	31.5	58	2856	GH392M016J315A ☐
	3900	18	20	60	2721	GH392M016K200A ☐
	4700	16	31.5	50	2886	GH472M016J315A ☐
	4700	18	25	55	2844	GH472M016K250A ☐
	5600	16	35.5	46	2968	GH562M016J355A ☐
	5600	18	31.5	48	3084	GH562M016K315A ☐
	5600	18	35.5	45	3168	GH562M016K355A ☐
	6800	16	40	40	3252	GH682M016J400A ☐
	6800	18	35.5	40	3252	GH682M016K355A ☐
	8200	18	35.5	38	3750	GH822M016K355A ☐
	10000	18	40	36	4150	GH103M016K400A ☐
25	10	5	11	3010	66	GH100M025C110A ☐
	15	5	11	2640	120	GH150M025C110A ☐
	22	5	11	2300	144	GH220M025C110A ☐
	27	5	11	2030	156	GH270M025C110A ☐
	33	5	11	1720	174	GH330M025C110A ☐
	39	5	11	1500	174	GH390M025C110A ☐
	47	5	11	1370	222	GH470M025C110A ☐
	47	6.3	11	1280	240	GH470M025E110A ☐
	56	5	11	1250	264	GH560M025C110A ☐
	68	6.3	11	970	300	GH680M025E110A ☐
	82	6.3	11	790	312	GH820M025E110A ☐
	100	6.3	11	680	360	GH101M025E110A ☐
	100	8	11.5	540	516	GH101M025F115A ☐
	120	6.3	11	580	402	GH121M025E110A ☐
	120	6.3	15	560	462	GH121M025E150A ☐
	150	6.3	15	540	510	GH151M025E150A ☐
	150	8	11.5	520	528	GH151M025F115A ☐
	180	6.3	15	510	546	GH181M025E150A ☐
	180	8	11.5	460	552	GH181M025F115A ☐
	220	8	11.5	420	618	GH221M025F115A ☐
	220	8	16	400	642	GH221M025F160A ☐

☐: Enter **blank** for Standard version ☐: Enter **X** for AEC-Q200 version

See "PACKAGING INFORMATION" to taped or formed products.

For further information please contact sales@capxon.org

STANDARD RATINGS

Part number shows bulk version with straight leads

V_R (V)	C_R (µF)	ø D (mm)	L (mm)	Z ▪ Max. Impedance +20°C ▪ 100kHz (mΩ)	I_R ▪ Max. Ripple Current +105°C ▪ 100kHz (mA rms)	CapXon Part Number
25	270	8	11.5	340	750	GH271M025F115A ☐
	270	8	16	320	756	GH271M025F160A ☐ ☐
	270	10	12.5	320	816	GH271M025G125A ☐ ☐
	330	8	16	250	960	GH331M025F160A ☐ ☐
	330	10	12.5	240	924	GH331M025G125A ☐ ☐
	470	8	20	230	1056	GH471M025F200A ☐ ☐
	470	10	12.5	210	1020	GH471M025G125A ☐ ☐
	470	10	16	210	1080	GH471M025G160A ☐ ☐
	560	8	20	170	1224	GH561M025F200A ☐ ☐
	560	10	16	150	1260	GH561M025G160A ☐ ☐
	680	10	20	110	1470	GH681M025G200A ☐ ☐
	680	13	16	100	1550	GH681M025I160A ☐
	820	10	20	110	1668	GH821M025G200A ☐ ☐
	820	10	25	100	1704	GH821M025G250A ☐ ☐
	1000	10	25	93	1812	GH102M025G250A ☐ ☐
	1000	13	20	90	1872	GH102M025I200A ☐
	1000	16	16	88	1926	GH102M025J160A ☐ ☐
	1200	13	20	82	2028	GH122M025I200A ☐
	1200	18	16	80	2240	GH122M025K160A ☐ ☐
	1500	13	20	67	2124	GH152M025I200A ☐
	1500	13	25	65	2190	GH152M025I250A ☐ ☐
	1800	13	30	58	2310	GH182M025I300A ☐
	1800	16	20	56	2172	GH182M025J200A ☐ ☐
	1800	16	25	58	2340	GH182M025J250A ☐ ☐
	2200	13	30	52	2592	GH222M025I300A ☐ ☐
	2200	16	25	50	2712	GH222M025J250A ☐ ☐
	2200	18	20	52	2697	GH222M025K200A ☐ ☐
	2700	13	35	50	2850	GH272M025I350A ☐ ☐
	2700	16	25	48	2673	GH272M025J250A ☐ ☐
	2700	16	31.5	46	2958	GH272M025J315A ☐ ☐
	3300	16	31.5	38	3204	GH332M025J315A ☐ ☐
	3300	16	35.5	36	3288	GH332M025J355A ☐ ☐
	3300	18	25	41	3156	GH332M025K250A ☐ ☐
	3900	16	35.5	36	3500	GH392M025J355A ☐ ☐
	3900	18	31.5	36	3544	GH392M025K315A ☐ ☐
	4700	16	40	34	3800	GH472M025J400A ☐ ☐
	4700	18	35.5	34	3800	GH472M025K355A ☐ ☐
	5600	18	40	30	4100	GH562M025K400A ☐ ☐
35	10	5	11	2650	84	GH100M035C110A ☐ ☐
	15	5	11	2290	144	GH150M035C110A ☐ ☐
	22	5	11	1900	162	GH220M035C110A ☐ ☐
	27	5	11	1580	174	GH270M035C110A ☐ ☐
	27	6.3	11	1420	198	GH270M035E110A ☐ ☐

☐: Enter **blank** for Standard version ☐: Enter **X** for AEC-Q200 version

See "PACKAGING INFORMATION" to taped or formed products.

STANDARD RATINGS

Part number shows bulk version with straight leads

V_R (V)	C_R (µF)	ø D (mm)	L (mm)	Z ▪ Max. Impedance +20°C ▪ 100kHz (mΩ)	I_R ▪ Max. Ripple Current +105°C ▪ 100kHz (mA rms)	CapXon Part Number
35	33	5	11	1250	222	GH330M035C110A ☐☐
	33	6.3	11	1250	240	GH330M035E110A ☐☐
	39	6.3	11	1100	252	GH390M035E110A ☐☐
	47	5	11	96	232	GH470M035C110A ☐☐
	47	6.3	11	920	264	GH470M035E110A ☐☐
	56	6.3	11	750	282	GH560M035E110A ☐☐
	56	6.3	15	680	306	GH560M035E150A ☐☐
	68	6.3	11	620	312	GH680M035E110A ☐☐
	68	6.3	15	550	348	GH680M035E150A ☐☐
	82	6.3	15	510	354	GH820M035E150A ☐☐
	82	8	11.5	470	384	GH820M035F115A ☐☐
	100	6.3	11	490	329	GH101M035E110A ☐☐
	100	6.3	15	470	378	GH101M035E150A ☐☐
	100	8	11.5	450	414	GH101M035F115A ☐☐
	120	8	11.5	420	546	GH121M035F115A ☐☐
	120	8	16	380	612	GH121M035F160A ☐☐
	150	8	11.5	380	618	GH151M035F115A ☐☐
	150	8	16	350	714	GH151M035F160A ☐☐
	150	10	12.5	350	720	GH151M035G125A ☐☐
	180	8	16	320	792	GH181M035F160A ☐☐
	180	10	12.5	320	804	GH181M035G125A ☐☐
	220	8	16	260	864	GH221M035F160A ☐☐
	220	8	20	240	936	GH221M035F200A ☐☐
	220	10	12.5	240	888	GH221M035G125A ☐☐
	270	8	20	220	1056	GH271M035F200A ☐☐
	270	10	12.5	240	984	GH271M035G125A ☐☐
	270	10	16	210	1068	GH271M035G160A ☐☐
	330	8	20	160	1140	GH331M035F200A ☐☐
	330	10	16	150	1176	GH331M035G160A ☐☐
	470	10	20	110	1302	GH471M035G200A ☐☐
	470	10	25	100	1398	GH471M035G250A ☐☐
	470	13	16	110	1272	GH471M035I160A ☐☐
	470	13	20	100	1398	GH471M035I200A ☐☐
	560	10	25	96	1572	GH561M035G250A ☐☐
	560	13	20	96	1584	GH561M035I200A ☐☐
	680	10	25	84	1680	GH681M035G250A ☐☐
	680	13	20	82	1692	GH681M035I200A ☐☐
	680	16	16	80	1740	GH681M035J160A ☐☐
	820	13	20	68	1818	GH821M035I200A ☐☐
	820	13	25	62	1944	GH821M035I250A ☐☐
	1000	10	30	60	2136	GH102M035G300A ☐☐
	1000	13	25	60	2184	GH102M035I250A ☐☐
	1000	13	30	58	2280	GH102M035I300A ☐☐

☐: Enter **blank** for Standard version ☐: Enter **X** for AEC-Q200 version

See "PACKAGING INFORMATION" to taped or formed products.

For further information please contact sales@capxon.org

STANDARD RATINGS

Part number shows bulk version with straight leads

V_R (V)	C_R (µF)	ø D (mm)	L (mm)	Z ▪ Max. Impedance +20°C ▪ 100kHz (mΩ)	I_R ▪ Max. Ripple Current +105°C ▪ 100kHz (mA rms)	CapXon Part Number
35	1000	18	16	56	2189	GH102M035K160A ☐☐
	1200	13	25	52	2292	GH122M035I250A ☐☐
	1200	16	20	52	2384	GH122M035J200A ☐☐
	1200	16	25	50	2568	GH122M035J250A ☐☐
	1500	13	35	48	2820	GH152M035I350A ☐☐
	1500	16	31.5	48	2928	GH152M035J315A ☐☐
	1800	13	35	45	2976	GH182M035I350A ☐☐
	1800	16	25	48	2722	GH182M035J250A ☐☐
	1800	16	31.5	45	3012	GH182M035J315A ☐☐
	1800	18	20	48	2707	GH182M035K200A ☐☐
	2200	16	31.5	36	3228	GH222M035J315A ☐☐
	2200	18	25	36	3132	GH222M035K250A ☐☐
	2700	16	35.5	32	3294	GH272M035J355A ☐☐
	2700	18	31.5	32	3336	GH272M035K315A ☐☐
	3300	16	40	29	3800	GH332M035J400A ☐☐
	3300	18	35.5	29	3800	GH332M035K355A ☐☐
	3900	18	40	26	4100	GH392M035K400A ☐☐
50	0.47	5	11	7230	12	GHR47M050C110A ☐☐
	1	5	11	4310	24	GH010M050C110A ☐☐
	2.2	5	11	3600	36	GH2R2M050C110A ☐☐
	3.3	5	11	3500	48	GH3R3M050C110A ☐☐
	4.7	5	11	3300	66	GH4R7M050C110A ☐☐
	5.6	5	11	3200	96	GH5R6M050C110A ☐☐
	6.8	5	11	3000	96	GH6R8M050C110A ☐☐
	8.2	5	11	2800	108	GH8R2M050C110A ☐☐
	10	5	11	2600	120	GH100M050C110A ☐☐
	15	5	11	1870	150	GH150M050C110A ☐☐
	22	5	11	1600	162	GH220M050C110A ☐☐
	22	6.3	11	1270	168	GH220M050E110A ☐☐
	27	6.3	11	1020	192	GH270M050E110A ☐☐
	33	6.3	11	870	282	GH330M050E110A ☐☐
	33	6.3	15	850	296	GH330M050E150A ☐☐
	39	6.3	11	720	306	GH390M050E110A ☐☐
	39	6.3	15	700	330	GH390M050E150A ☐☐
	47	6.3	11	580	303	GH470M050E110A ☐☐
	47	6.3	15	550	348	GH470M050E150A ☐☐
	47	8	11.5	550	366	GH470M050F115A ☐☐
	56	6.3	11	490	323	GH560M050E110A ☐☐
	56	8	11.5	470	378	GH560M050F115A ☐☐
	68	8	11.5	470	420	GH680M050F115A ☐☐
	82	6.3	15	460	462	GH820M050E150A ☐☐
	82	8	11.5	460	492	GH820M050F115A ☐☐
	82	8	16	450	528	GH820M050F160A ☐☐

☐: Enter **blank** for Standard version ☐: Enter **X** for AEC-Q200 version

See "PACKAGING INFORMATION" to taped or formed products.

For further information please contact sales@capxon.org

STANDARD RATINGS

Part number shows bulk version with straight leads

V_R (V)	C_R (µF)	ø D (mm)	L (mm)	Z ▪ Max. Impedance +20°C ▪ 100kHz (mΩ)	I_R ▪ Max. Ripple Current +105°C ▪ 100kHz (mA rms)	CapXon Part Number
50	100	8	11.5	450	540	GH101M050F115A ☐☐
	100	8	16	250	576	GH101M050F160A ☐☐
	120	8	16	250	630	GH121M050F160A ☐☐
	150	8	16	240	696	GH151M050F160A ☐☐
	150	8	20	240	756	GH151M050F200A ☐☐
	150	10	12.5	250	702	GH151M050G125A ☐☐
	150	10	16	240	780	GH151M050G160A ☐☐
	180	8	20	240	864	GH181M050F200A ☐☐
	180	10	16	240	912	GH181M050G160A ☐☐
	220	10	16	240	1056	GH221M050G160A ☐☐
	220	10	20	200	1122	GH221M050G200A ☐☐
	270	10	20	100	1212	GH271M050G200A ☐☐
	270	10	25	100	1284	GH271M050G250A ☐☐
	270	13	16	100	1278	GH271M050I160A ☐☐
	330	10	25	95	1404	GH331M050G250A ☐☐
	330	13	20	82	1500	GH331M050I200A ☐☐
	470	10	30	78	1749	GH471M050G300A ☐☐
	470	13	20	78	1776	GH471M050I200A ☐☐
	470	13	25	78	1860	GH471M050I250A ☐☐
	470	16	16	78	1827	GH471M050J160A ☐☐
	560	13	20	75	2094	GH561M050I200A ☐☐
	560	13	25	70	2172	GH561M050I250A ☐☐
	560	18	16	73	2313	GH561M050K160A ☐☐
	680	13	25	57	2304	GH681M050I250A ☐☐
	680	16	25	57	2376	GH681M050J250A ☐☐
	820	13	30	52	2412	GH821M050I300A ☐☐
	820	16	20	54	2084	GH821M050J200A ☐☐
	820	16	31.5	52	2484	GH821M050J315A ☐☐
	1000	13	40	48	2750	GH102M050I400A ☐☐
	1000	16	25	50	2676	GH102M050J250A ☐☐
	1000	16	31.5	48	2736	GH102M050J315A ☐☐
	1000	18	20	50	2661	GH102M050K200A ☐☐
	1200	16	31.5	45	2952	GH122M050J315A ☐☐
	1200	16	35.5	42	3048	GH122M050J355A ☐☐
	1200	18	25	47	2854	GH122M050K250A ☐☐
	1500	16	35.5	38	3216	GH152M050J355A ☐☐
	1800	16	40	35	3550	GH182M050J400A ☐☐
	1800	18	31.5	35	3367	GH182M050K315A ☐☐
	2200	18	35.5	32	3550	GH222M050K355A ☐☐
	2700	18	40	30	3790	GH272M050K400A ☐☐
	3300	18	40	28	3810	GH332M050K400A ☐☐
63	10	5	11	3015	116	GH100M063C110A ☐☐
	15	5	11	2370	130	GH150M063C110A ☐☐

☐: Enter **blank** for Standard version ☐: Enter **X** for AEC-Q200 version

See "PACKAGING INFORMATION" to taped or formed products.

For further information please contact sales@capxon.org

STANDARD RATINGS

Part number shows bulk version with straight leads

V_R (V)	C_R (µF)	ø D (mm)	L (mm)	Z ▪ Max. Impedance +20°C ▪ 100kHz (mΩ)	I_R ▪ Max. Ripple Current +105°C ▪ 100kHz (mA rms)	CapXon Part Number
63	22	5	11	1770	151	GH220M063C110A ☐☐
	22	6.3	11	1391	194	GH220M063E110A ☐☐
	27	6.3	11	1290	201	GH270M063E110A ☐☐
	33	6.3	11	1013	227	GH330M063E110A ☐☐
	39	6.3	11	890	242	GH390M063E110A ☐☐
	47	6.3	11	755	263	GH470M063E110A ☐☐
	47	8	11.5	730	313	GH470M063F115A ☐☐
	56	8	11.5	700	319	GH560M063F115A ☐☐
	68	8	11.5	500	378	GH680M063F115A ☐☐
	68	8	16	420	476	GH680M063F160A ☐☐
	82	8	11.5	470	390	GH820M063F115A ☐☐
	82	8	16	420	476	GH820M063F160A ☐☐
	82	10	12.5	430	480	GH820M063G125A ☐☐
	100	8	16	360	514	GH101M063F160A ☐☐
	100	10	12.5	375	514	GH101M063G125A ☐☐
	120	8	16	365	511	GH121M063F160A ☐☐
	120	8	20	320	603	GH121M063F200A ☐☐
	120	10	12.5	357	527	GH121M063G125A ☐☐
	120	10	16	300	639	GH121M063G160A ☐☐
	150	8	20	320	603	GH151M063F200A ☐☐
	150	10	16	276	666	GH151M063G160A ☐☐
	180	8	25	260	741	GH181M063F250A ☐☐
	180	10	16	280	662	GH181M063G160A ☐☐
	180	10	20	260	757	GH181M063G200A ☐☐
	220	8	25	230	788	GH221M063F250A ☐☐
	220	10	16	230	730	GH221M063G160A ☐☐
	220	10	20	200	891	GH221M063G200A ☐☐
	220	13	16	200	910	GH221M063I160A ☐☐
	270	10	20	164	986	GH271M063G200A ☐☐
	270	13	20	130	1241	GH271M063I200A ☐☐
	330	10	25	126	1242	GH331M063G250A ☐☐
	330	13	16	150	1086	GH331M063I160A ☐☐
	330	13	20	130	1281	GH331M063I200A ☐☐
	330	13	25	100	1611	GH331M063I250A ☐☐
	390	13	25	93	1618	GH391M063I250A ☐☐
	470	13	20	93	1516	GH471M063I200A ☐☐
	470	13	25	90	1698	GH471M063I250A ☐☐
	470	13	30	88	1863	GH471M063I300A ☐☐
	470	16	20	82	1856	GH471M063J200A ☐☐
	560	13	25	87	1727	GH561M063I250A ☐☐
	560	13	30	81	1942	GH561M063I300A ☐☐
	560	16	20	82	1857	GH561M063J200A ☐☐
	680	13	30	71	2081	GH681M063I300A ☐☐

☐: Enter **blank** for Standard version ☐: Enter **X** for AEC-Q200 version

See "PACKAGING INFORMATION" to taped or formed products.

For further information please contact sales@capxon.org

STANDARD RATINGS

Part number shows bulk version with straight leads

V_R (V)	C_R (µF)	ø D (mm)	L (mm)	Z ▪ Max. Impedance +20°C ▪ 100kHz (mΩ)	I_R ▪ Max. Ripple Current +105°C ▪ 100kHz (mA rms)	CapXon Part Number
63	680	13	35	68	2273	GH681M063I350A ☐☐
	680	16	20	84	1834	GH681M063J200A ☐☐
	820	13	40	66	2453	GH821M063I400A ☐☐
	820	16	25	66	2229	GH821M063J250A ☐☐
	820	18	20	73	2108	GH821M063K200A ☐☐
	1000	13	45	63	2652	GH102M063I450A ☐☐
	1000	16	31.5	56	2689	GH102M063J315A ☐☐
	1000	18	25	71	2307	GH102M063K250A ☐☐
	1200	16	31.5	54	2726	GH122M063J315A ☐☐
	1200	18	25	62	2470	GH122M063K250A ☐☐
	1500	18	31.5	51	2996	GH152M063K315A ☐☐
	1500	18	35.5	48	3256	GH152M063K355A ☐☐
	1800	16	40	36	3759	GH182M063J400A ☐☐
	1800	18	35.5	42	3480	GH182M063K355A ☐☐
	2200	18	40	35	3937	GH222M063K400A ☐☐
80	10	5	11	4070	99	GH100M080C110A ☐☐
	15	5	11	3200	112	GH150M080C110A ☐☐
	22	6.3	11	1878	167	GH220M080E110A ☐☐
	27	6.3	11	1742	173	GH270M080E110A ☐☐
	33	6.3	11	1367	195	GH330M080E110A ☐☐
	39	8	11.5	1202	244	GH390M080F115A ☐☐
	47	8	11.5	1019	265	GH470M080F115A ☐☐
	56	8	11.5	945	275	GH560M080F115A ☐☐
	56	8	16	900	325	GH560M080F160A ☐☐
	68	8	16	660	380	GH680M080F160A ☐☐
	68	10	12.5	660	388	GH680M080G125A ☐☐
	82	8	16	630	389	GH820M080F160A ☐☐
	82	10	12.5	660	389	GH820M080G125A ☐☐
	100	8	20	450	509	GH101M080F200A ☐☐
	100	10	16	450	521	GH101M080G160A ☐☐
	100	13	16	440	634	GH101M080I160A ☐☐
	120	10	16	430	533	GH121M080G160A ☐☐
	150	10	20	345	657	GH151M080G200A ☐☐
	150	13	16	400	664	GH151M080I160A ☐☐
	180	10	20	330	677	GH181M080G200A ☐☐
	180	10	25	320	755	GH181M080G250A ☐☐
	180	13	16	340	721	GH181M080I160A ☐☐
	220	10	25	310	766	GH221M080G250A ☐☐
	220	13	20	310	830	GH221M080I200A ☐☐
	270	13	20	270	889	GH271M080I200A ☐☐
	270	13	25	250	1018	GH271M080I250A ☐☐
	330	13	20	190	1060	GH331M080I200A ☐☐
	330	16	20	180	1253	GH331M080J200A ☐☐

☐: Enter **blank** for Standard version ☐: Enter **X** for AEC-Q200 version

See "PACKAGING INFORMATION" to taped or formed products.

For further information please contact sales@capxon.org

STANDARD RATINGS

Part number shows bulk version with straight leads

V_R (V)	C_R (µF)	ø D (mm)	L (mm)	Z ▪ Max. Impedance +20°C ▪ 100kHz (mΩ)	I_R ▪ Max. Ripple Current +105°C ▪ 100kHz (mA rms)	CapXon Part Number
80	390	13	30	150	1427	GH391M080I300A [ ]
	470	13	30	130	1533	GH471M080I300A [ ]
	470	13	35	120	1711	GH471M080I350A [ ]
	470	16	25	160	1431	GH471M080J250A [ ]
	470	18	20	150	1470	GH471M080K200A [ ]
	560	13	40	140	1684	GH561M080I400A [ ]
	560	16	25	150	1478	GH561M080J250A [ ]
	560	18	20	150	1470	GH561M080K200A [ ]
	680	16	31.5	130	1757	GH681M080J315A [ ]
	680	18	25	150	1581	GH681M080K250A [ ]
	820	16	35.5	120	1929	GH821M080J355A [ ]
	820	18	25	130	1699	GH821M080K250A [ ]
	1000	16	35.5	120	1929	GH102M080J355A [ ]
	1000	16	40	110	2150	GH102M080J400A [ ]
	1000	18	31.5	110	2040	GH102M080K315A [ ]
	1200	16	40	90	2377	GH122M080J400A [ ]
	1200	18	35.5	95	2314	GH122M080K355A [ ]
	1500	16	40	84	2461	GH152M080J400A [ ]
	1500	18	40	83	2641	GH152M080K400A [ ]
	1800	18	40	82	2657	GH182M080K400A [ ]
100	4.7	5	11	5750	54	GH4R7M100C110A [ ]
	5.6	5	11	5000	90	GH5R6M100C110A [ ]
	6.8	5	11	4360	96	GH6R8M100C110A [ ]
	8.2	5	11	3675	105	GH8R2M100C110A [ ]
	10	6.3	11	2625	141	GH100M100E110A [ ]
	10	8	11.5	2200	180	GH100M100F115A [ ]
	15	6.3	11	2313	150	GH150M100E110A [ ]
	22	6.3	11	1850	168	GH220M100E110A [ ]
	22	8	11.5	1375	228	GH220M100F115A [ ]
	27	8	11.5	1310	233	GH270M100F115A [ ]
	33	8	11.5	1238	240	GH330M100F115A [ ]
	39	8	16	1200	281	GH390M100F160A [ ]
	47	8	16	850	335	GH470M100F160A [ ]
	47	10	12.5	810	350	GH470M100G125A [ ]
	47	10	16	780	357	GH470M100G160A [ ]
	56	8	16	760	354	GH560M100F160A [ ]
	56	8	20	680	414	GH560M100F200A [ ]
	56	10	12.5	750	364	GH560M100G125A [ ]
	68	8	20	650	423	GH680M100F200A [ ]
	68	10	16	680	424	GH680M100G160A [ ]
	82	8	20	520	473	GH820M100F200A [ ]
	82	10	16	520	485	GH820M100G160A [ ]
	100	8	30	420	635	GH101M100F300A [ ]

[ ]: Enter **blank** for Standard version [ ]: Enter **X** for AEC-Q200 version

See "PACKAGING INFORMATION" to taped or formed products.

STANDARD RATINGS

Part number shows bulk version with straight leads

V_R (V)	C_R (µF)	ø D (mm)	L (mm)	Z ▪ Max. Impedance +20°C ▪ 100kHz (mΩ)	I_R ▪ Max. Ripple Current +105°C ▪ 100kHz (mA rms)	CapXon Part Number
100	100	10	16	450	521	GH101M100G160A ☐☐
	100	10	20	420	595	GH101M100G200A ☐☐
	100	13	16	430	641	GH101M100I160A ☐☐
	100	13	20	380	749	GH101M100I200A ☐☐
	120	8	35	360	738	GH121M100F350A ☐☐
	120	10	20	400	610	GH121M100G200A ☐☐
	120	10	25	370	701	GH121M100G250A ☐☐
	120	13	16	400	664	GH121M100I160A ☐☐
	150	10	25	330	743	GH151M100G250A ☐☐
	150	10	30	310	833	GH151M100G300A ☐☐
	150	13	20	330	804	GH151M100I200A ☐☐
	180	13	20	290	858	GH181M100I200A ☐☐
	180	13	25	280	962	GH181M100I250A ☐☐
	220	13	20	270	889	GH221M100I200A ☐☐
	220	13	25	250	108	GH221M100I250A ☐☐
	220	16	16	270	915	GH221M100J160A ☐☐
	220	16	20	250	1063	GH221M100J200A ☐☐
	270	10	40	230	1106	GH271M100G400A ☐☐
	270	13	30	200	1235	GH271M100I300A ☐☐
	270	16	25	200	1280	GH271M100J250A ☐☐
	330	13	30	160	1381	GH331M100I300A ☐☐
	330	13	35	140	1584	GH331M100I350A ☐☐
	330	16	25	140	1530	GH331M100J250A ☐☐
	390	13	40	130	1748	GH391M100I400A ☐☐
	390	18	25	150	1581	GH391M100K250A ☐☐
	470	16	25	150	1478	GH471M100J250A ☐☐
	470	16	31.5	110	1910	GH471M100J315A ☐☐
	470	18	25	140	1637	GH471M100K250A ☐☐
	560	16	35.5	130	1853	GH561M100J355A ☐☐
	560	18	31.5	130	1877	GH561M100K315A ☐☐
	680	16	35.5	120	1929	GH681M100J355A ☐☐
	680	18	35.5	110	2150	GH681M100K355A ☐☐
	820	18	35.5	105	2201	GH821M100K355A ☐☐
	820	18	40	100	2406	GH821M100K400A ☐☐
	1000	18	40	95	2468	GH102M100K400A ☐☐

☐: Enter **blank** for Standard version ☐: Enter **X** for AEC-Q200 version

See "PACKAGING INFORMATION" to taped or formed products.

For further information please contact sales@capxon.org

DIMENSIONS ▪ All dimensions in mm

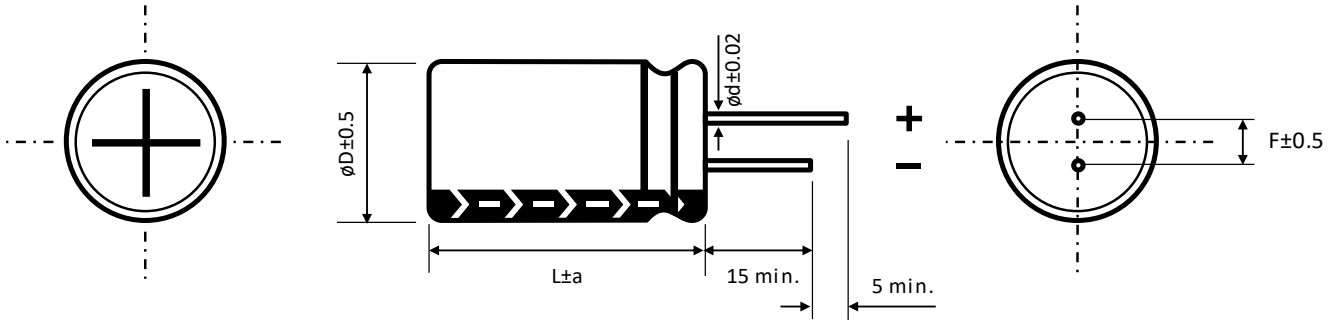

ø D	5	6.3	8		10	13	16	18
F	2	2.5	3.5		5	5	7.5	7.5
ø d	0.5		L < 20	L ≥ 20	0.6		0.8	
			0.5	0.6				

a	ø D < 16	ø D = 16		ø D = 18	
	1.5	L = 25 to 35.5	L < 25 and L ≥ 40	L = 25 to 31.5	L < 25 and L ≥ 35.5
		1.5	2	1.5	2

MULTIPLIER K_f for RIPPLE CURRENT vs. FREQUENCY

C_R (µF) / Frequency (Hz)	100/120	400	1k	10k	100k
$C_R \leq 10$	0.4	0.52	0.6	0.92	1
$10 < C_R \leq 100$	0.67	0.8	0.83	0.94	1
$100 < C_R \leq 1000$	0.75	0.84	0.88	0.95	1
$1000 \leq C_R$	0.82	0.87	0.92	0.95	1

For further information please contact sales@capxon.org

PRECAUTIONS, GUIDELINES AND PACKAGING INFORMATON

Unless otherwise agreed in individual specifications, all products are subject to our “General Precautions and Guidelines” as well as our “Packaging Information”. Please refer to the following links in the table.

General Precautions and Guidelines	Packaging Information Liquid Radial
Page 837	Page 336

DISCLAIMER

All product related data (e.g. specification, statements and general information) are subject to change without any notice. It is necessary that the customer observes all product related technical / application information and handling instructions.

CapXon products are designed and manufactured according to severe quality and safety standards. Under no circumstance, CapXon warrants that any CapXon product is suitable for the purposes intended for your application, even CapXon knows the application. It is customer's duty and obligation to check and make sure that CapXon products are suitable for the purposes intended and select the correct and proper CapXon product. Customers are requested to perform a sufficient validation and reliability evaluation to assure needed safety level and reliability performance by suitable designs and to apply proper safeguards (e.g. redundancies, protective circuits).

Particular operating conditions (ambient temperature, ripple current, voltage, thermal resistance, etc.) as well as storage, production or assembly may affect the performance and the lifetime of the capacitor. Please consult CapXon for lifetime estimation, failure mode considerations or worst-case scenarios according to the product technology, product tolerances / deviations or change of the characteristics of the capacitor due to shipment, storage, handling, production and usage.

For aerospace or military application, life-saving, life-sustaining, safety critical applications or any application where failure may cause severe personal injury or death, please consult us before design-in the capacitor in your application.

Except for the written expressed warranties, CapXon does not impliedly, by assumption or whatever else, warrant, undertake, promise any other warranty or guaranty for any CapXon product.

For further information, please visit our website www.capxongroup.com or contact CapXon directly.

KH SERIES ▪ HIGH VOLTAGE, LONG LIFE 105°C TYPE



KEY FEATURES

LONG LIFE HIGH VOLTAGE

- **ALUMINUM ELECTROLYTIC CAPACITOR** ▪ THT type
- Endurance: 105°C ▪ 5 000 hours up to 10 000 hours
- High ripple current
- High reliability
- Wide voltage range

SPECIFICATIONS

Items		Performance Characteristics										
Operating Temperature Range		-40 ~ +105°C						-25 ~ +105°C				
Rated Voltage Range	V_R	10 ~ 400V DC						450V DC				
Surge Voltage	V_S	($V_R \le 315V$): $V_S = 1.15 \cdot V_R$						($V_R > 315V$): $V_S = 1.10 \cdot V_R$				
Capacitance Range	C_R	6.8 ~ 3300µF						6.8 ~ 100µF				
Cap. Tolerance	ΔC	±20% (120Hz ▪ 20°C)										
Leakage Current (20°C ▪ V_R applied)	I_{LEAK}	10 ~ 100V						≤ $0.01 \cdot C_R \cdot V_R$ or 3µA (After 2 min.)				
		160 ~ 450V						≤ $0.04 \cdot C_R \cdot V_R$ + 100µA (After 1 min.)				
		[I_{LEAK} (µA) ; C_R (µF) ; V_R (V)]										
Dissipation Factor % (20°C ▪ 120Hz)	tanδ	V_R (V DC)	10	16	25	35	50	160	200	250	350	400	450
		tanδ (%)	19	16	14	12	10	15	15	15	20	20	20
		For $C_R \ge 1000µF$, add 2% per every multiple 1000µF of rated capacitance value											
Low Temperature Characteristics at 120Hz	Z ratio max.	V_R (V DC)	10	16	25	35	50	160	200	250	350	400	450
		Z-25°C/Z+20°C	4	3	2	2	2	3	3	3	6	6	6
		Z-40°C/Z+20°C	6	4	3	3	3	6	6	6	6	6	-
		For capacitance > 1000µF											
		Z-25°C/Z+20°C	Add 0.5 for every multiple 1000µF of rated capacitance value										
		Z-40°C/Z+20°C	Add 1 for every multiple 1000µF of rated capacitance value										

Lifetime Test			
Endurance 105°C (V_R & I_R applied)	Test	**5 000 hours**	ø D < 8 mm
		8 000 hours	ø D = 8 mm
		10 000 hours	ø D ≥ 10 mm
	△C/C_R	≤ ±20% of initial measured value	
	tanδ	≤ 200% of initial specified value	
	I_{Leak}	≤ the initial specified value	
Shelf Life 105°C (V_R = 0)	Test	**1 000 hours**	
	△C/C_R	≤ ±20% of initial measured value	
	tanδ	≤ 200% of initial specified value	
	I_{Leak}	≤ the initial specified value	
	Before measurement: Restore capacitor to 20°C, apply V_R for 30 min according JIS-C-5101-4		

For further information please contact sales@capxon.org

STANDARD RATINGS

Part number shows bulk version with straight leads

V_R (V)	C_R (µF)	ø D (mm)	L (mm)	I_R ▪ Max. Ripple Current +105°C ▪ 100kHz (mA rms)	CapXon Part Number
10	47	5	11	100	KH470M010C110A
	68	5	11	130	KH680M010C110A
	100	6.3	11	190	KH101M010E110A
	150	6.3	11	220	KH151M010E110A
	220	6.3	11	270	KH221M010E110A
	330	6.3	11	334	KH331M010E110A
	330	8	11.5	390	KH331M010F115A
	470	8	11.5	458	KH471M010F115A
	470	10	12.5	540	KH471M010G125A
	1000	8	20	877	KH102M010F200A
	1000	10	12.5	810	KH102M010G125A
	1000	10	16	900	KH102M010G160A
	2200	13	16	1401	KH222M010I160A
	2200	13	20	1540	KH222M010I200A
	3300	13	20	1533	KH332M010I200A
	3300	16	25	1900	KH332M010J250A
16	33	5	11	115	KH330M016C110A
	47	5	11	145	KH470M016C110A
	68	6.3	11	200	KH680M016E110A
	100	6.3	11	209	KH101M016E110A
	100	8	11.5	245	KH101M016F115A
	150	6.3	11	256	KH151M016E110A
	150	8	11.5	300	KH151M016F115A
	220	6.3	11	359	KH221M016E110A
	220	8	11.5	420	KH221M016F115A
	220	10	12.5	495	KH221M016G125A
	330	8	11.5	433	KH331M016F115A
	330	8	16	500	KH331M016F160A
	470	8	11.5	557	KH471M016F115A
	470	10	12.5	657	KH471M016G125A
	470	10	16	730	KH471M016G160A
	1000	10	20	1012	KH102M016G200A
	1000	13	20	1173	KH102M016I200A
	2200	13	20	1689	KH222M016I200A
	2200	13	25	1862	KH222M016I250A
	2200	16	25	2093	KH222M016J250A
25	22	5	11	100	KH220M025C110A
	33	5	11	130	KH330M025C110A
	47	6.3	11	160	KH470M025E110A
	68	6.3	11	196	KH680M025E110A
	68	8	11.5	230	KH680M025F115A
	100	6.3	11	280	KH101M025E110A
	100	8	11.5	327	KH101M025F115A

See "PACKAGING INFORMATION" to taped or formed products.

STANDARD RATINGS

Part number shows bulk version with straight leads

V_R (V)	C_R (µF)	ø D (mm)	L (mm)	I_R ▪ Max. Ripple Current +105°C ▪ 100kHz (mA rms)	CapXon Part Number
25	150	8	11.5	390	KH151M025F115A
	150	10	12.5	460	KH151M025G125A
	220	8	11.5	443	KH221M025F115A
	220	10	16	580	KH221M025G160A
	330	8	16	644	KH331M025F160A
	330	10	12.5	657	KH331M025G125A
	330	10	16	729	KH331M025G160A
	330	10	20	805	KH331M025G200A
	470	10	16	861	KH471M025G160A
	470	10	20	950	KH471M025G200A
	1000	13	20	1407	KH102M025I200A
	1000	13	25	1552	KH102M025I250A
	2200	16	25	2169	KH222M025J250A
	2200	16	31.5	2400	KH222M025J315A
35	10	5	11	65	KH100M035C110A
	22	5	11	125	KH220M035C110A
	33	5	11	160	KH330M035C110A
	33	6.3	11	178	KH330M035E110A
	47	5	11	180	KH470M035C110A
	47	6.3	11	205	KH470M035E110A
	47	8	11.5	240	KH470M035F115A
	68	6.3	11	231	KH680M035E110A
	68	8	11.5	270	KH680M035F115A
	100	8	11.5	330	KH101M035F115A
	100	10	12.5	390	KH101M035G125A
	150	8	11.5	482	KH151M035F115A
	150	8	16	557	KH151M035F160A
	150	10	16	632	KH151M035G160A
	220	8	16	610	KH221M035F160A
	220	10	16	689	KH221M035G160A
	220	10	20	760	KH221M035G200A
	330	10	16	809	KH331M035G160A
	330	10	20	892	KH331M035G200A
	330	13	20	1035	KH331M035I200A
	470	10	16	780	KH471M035G160A
	470	10	20	860	KH471M035G200A
	470	13	20	997	KH471M035I200A
	470	13	25	1100	KH471M035I250A
	820	10	25	1300	KH821M035G250A
	1000	13	20	1409	KH102M035I200A
	1000	13	25	1553	KH102M035I250A
	1000	16	25	1746	KH102M035J250A
	1000	16	31.5	1932	KH102M035J315A

See "PACKAGING INFORMATION" to taped or formed products.

For further information please contact sales@capxon.org

STANDARD RATINGS

Part number shows bulk version with straight leads

V_R (V)	C_R (µF)	ø D (mm)	L (mm)	I_R ▪ Max. Ripple Current +105°C ▪ 100kHz (mA rms)	CapXon Part Number
50	6.8	5	11	75	KH6R8M050C110A
	10	5	11	97	KH100M050C110A
	22	6.3	11	130	KH220M050E110A
	33	6.3	11	210	KH330M050E110A
	33	8	11.5	241	KH330M050F115A
	47	6.3	11	245	KH470M050E110A
	47	8	11.5	287	KH470M050F115A
	47	10	12.5	300	KH470M050G125A
	68	8	11.5	302	KH680M050F115A
	68	10	12.5	356	KH680M050G125A
	100	8	11.5	382	KH101M050F115A
	100	10	16	500	KH101M050G160A
	150	10	12.5	609	KH151M050G125A
	150	10	16	677	KH151M050G160A
	150	10	20	747	KH151M050G200A
	220	10	16	764	KH221M050G160A
	220	10	20	842	KH221M050G200A
	220	13	20	977	KH221M050I200A
	330	13	20	1043	KH331M050I200A
	330	13	25	1150	KH331M050I250A
	470	13	20	1252	KH471M050I200A
	470	16	20	1440	KH471M050J200A
	470	16	25	1552	KH471M050J250A
	1000	16	25	1771	KH102M050J250A
	1000	16	31.5	1959	KH102M050J315A
	1000	18	31.5	2093	KH102M050K315A
160	10	10	16	330	KH100M160G160A
	22	10	20	510	KH220M160G200A
	33	10	20	660	KH330M160G200A
	33	13	20	760	KH330M160I200A
	47	10	20	760	KH470M160G200A
	47	13	20	870	KH470M160I200A
	68	13	20	1190	KH680M160I200A
	68	13	25	1350	KH680M160I250A
	82	13	20	1280	KH820M160I200A
	100	13	25	1430	KH101M160I250A
	100	16	20	1430	KH101M160J200A
	100	18	20	1530	KH101M160K200A
	150	16	20	1900	KH151M160J200A
	150	18	25	2180	KH151M160K250A
	220	16	25	2380	KH221M160J250A
	220	18	25	2540	KH221M160K250A
	330	18	31.5	3140	KH331M160K315A

See "PACKAGING INFORMATION" to taped or formed products.

STANDARD RATINGS

Part number shows bulk version with straight leads

V_R (V)	C_R (µF)	ø D (mm)	L (mm)	I_R ▪ Max. Ripple Current +105°C ▪ 100kHz (mA rms)	CapXon Part Number
200	10	10	16	330	KH100M200G160A
	10	10	20	360	KH100M200G200A
	22	10	20	510	KH220M200G200A
	33	10	20	660	KH330M200G200A
	33	13	20	760	KH330M200I200A
	47	13	20	990	KH470M200I200A
	68	13	20	1310	KH680M200I200A
	82	16	20	1390	KH820M200J200A
	100	16	20	1430	KH101M200J200A
	100	18	20	1530	KH101M200K200A
	150	16	25	1900	KH151M200J250A
	150	18	25	2030	KH151M200K250A
	220	18	25	2370	KH221M200K250A
	220	18	31.5	2620	KH221M200K315A
	330	18	35.5	3230	KH331M200K355A
250	10	10	20	360	KH100M250G200A
	22	10	20	510	KH220M250G200A
	22	13	20	590	KH220M250I200A
	33	13	20	810	KH330M250I200A
	33	13	25	890	KH330M250I250A
	47	13	20	990	KH470M250I200A
	47	16	20	1130	KH470M250J200A
	68	16	20	1310	KH680M250J200A
	68	18	20	1400	KH680M250K200A
	82	16	20	1390	KH820M250J200A
	100	16	25	1540	KH101M250J250A
	100	18	25	1640	KH101M250K250A
	150	18	25	1950	KH151M250K250A
	150	18	31.5	2150	KH151M250K315A
	220	18	31.5	3140	KH221M250K315A
350	6.8	10	16	290	KH6R8M350G160A
	6.8	10	20	310	KH6R8M350G200A
	10	10	20	360	KH100M350G200A
	10	13	20	410	KH100M350I200A
	22	13	20	660	KH220M350I200A
	22	13	25	720	KH220M350I250A
	33	16	20	910	KH330M350J200A
	47	16	20	1090	KH470M350J200A
	47	18	20	1160	KH470M350K200A
	68	16	25	1410	KH680M350J250A
	68	18	20	1380	KH680M350K200A
	68	18	25	1480	KH680M350K250A
	82	18	25	1540	KH820M350K250A

See "PACKAGING INFORMATION" to taped or formed products.

STANDARD RATINGS

Part number shows bulk version with straight leads

V_R (V)	C_R (µF)	ø D (mm)	L (mm)	I_R ▪ Max. Ripple Current +105°C ▪ 100kHz (mA rms)	CapXon Part Number
350	100	18	25	1580	KH101M350K250A
	120	18	31.5	1870	KH121M350K315A
	150	18	35.5	2170	KH151M350K355A
400	6.8	10	12.5	260	KH6R8M400G125A
	6.8	10	16	290	KH6R8M400G160A
	6.8	10	20	310	KH6R8M400G200A
	10	10	16	330	KH100M400G160A
	10	10	20	360	KH100M400G200A
	10	13	20	410	KH100M400I200A
	15	13	20	560	KH150M400I200A
	22	13	20	770	KH220M400I200A
	22	16	20	880	KH220M400J200A
	22	16	25	950	KH220M400J250A
	33	16	20	910	KH330M400J200A
	33	18	20	970	KH330M400K200A
	47	16	25	1190	KH470M400J250A
	47	18	20	1190	KH470M400K200A
	47	18	25	1270	KH470M400K250A
	68	18	25	1480	KH680M400K250A
	68	18	31.5	1630	KH680M400K315A
	82	18	25	1530	KH820M400K250A
	100	18	31.5	1730	KH101M400K315A
	120	18	35.5	1950	KH121M400K355A
	150	18	40	2220	KH151M400K400A
450	6.8	10	20	290	KH6R8M450G200A
	6.8	13	20	330	KH6R8M450I200A
	10	13	20	460	KH100M450I200A
	10	13	25	500	KH100M450I250A
	15	13	20	550	KH150M450I200A
	15	13	25	610	KH150M450I250A
	22	13	25	710	KH220M450I250A
	22	16	20	760	KH220M450J200A
	22	16	25	790	KH220M450J250A
	33	16	25	990	KH330M450J250A
	33	18	20	990	KH330M450K200A
	33	18	25	1060	KH330M450K250A
	47	18	25	1210	KH470M450K250A
	47	18	31.5	1330	KH470M450K315A
	68	18	31.5	1580	KH680M450K315A
	82	18	35.5	1790	KH820M450K355A
	100	18	40	1810	KH101M450K400A

See "PACKAGING INFORMATION" to taped or formed products.

DIMENSIONS ▪ All dimensions in mm

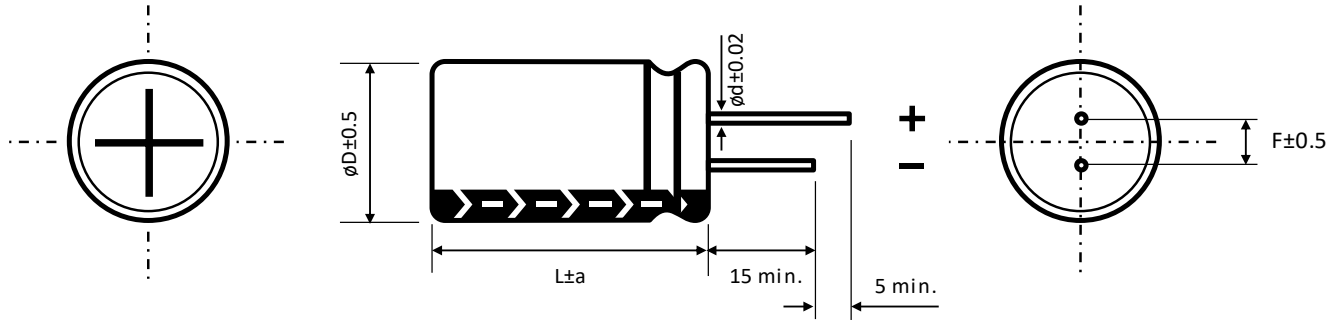

ø D	5	6.3	8		10	13	16	18
F	2	2.5	3.5		5	5	7.5	7.5
ø d	0.5		L < 20	L ≥ 20	0.6		0.8	
			0.5	0.6				

a	ø D < 16	ø D = 16		ø D = 18	
	1.5	L = 25 to 35.5	L < 25 and L ≥ 40	L = 25 to 31.5	L < 25 and L ≥ 35.5
		1.5	2	1.5	2

MULTIPLIER K_f for RIPPLE CURRENT vs. FREQUENCY

C_R (µF) / Frequency (Hz)	100/120	1k	10k	100k
6.8 ~ 3300	0.5	0.8	0.85	1

PRECAUTIONS, GUIDELINES AND PACKAGING INFORMATON

Unless otherwise agreed in individual specifications, all products are subject to our “General Precautions and Guidelines” as well as our “Packaging Information”. Please refer to the following links in the table.

General Precautions and Guidelines	Packaging Information Liquid Radial
Page 837	Page 336

DISCLAIMER

All product related data (e.g. specification, statements and general information) are subject to change without any notice. It is necessary that the customer observes all product related technical / application information and handling instructions.

CapXon products are designed and manufactured according to severe quality and safety standards. Under no circumstance, CapXon warrants that any CapXon product is suitable for the purposes intended for your application, even CapXon knows the application. It is customer's duty and obligation to check and make sure that CapXon products are suitable for the purposes intended and select the correct and proper CapXon product. Customers are requested to perform a sufficient validation and reliability evaluation to assure needed safety level and reliability performance by suitable designs and to apply proper safeguards (e.g. redundancies, protective circuits).

Particular operating conditions (ambient temperature, ripple current, voltage, thermal resistance, etc.) as well as storage, production or assembly may affect the performance and the lifetime of the capacitor. Please consult CapXon for lifetime estimation, failure mode considerations or worst-case scenarios according to the product technology, product tolerances / deviations or change of the characteristics of the capacitor due to shipment, storage, handling, production and usage.

For aerospace or military application, life-saving, life-sustaining, safety critical applications or any application where failure may cause severe personal injury or death, please consult us before design-in the capacitor in your application.

Except for the written expressed warranties, CapXon does not impliedly, by assumption or whatever else, warrant, undertake, promise any other warranty or guaranty for any CapXon product.

For further information, please visit our website www.capxongroup.com or contact CapXon directly.

FK SERIES ▪ HIGH VOLTAGE, AUTOMOTIVE 105°C TYPE



KEY FEATURES

AEC-Q 200 HIGH VOLTAGE

- **ALUMINUM ELECTROLYTIC CAPACITOR** ▪ THT type
- Endurance: 105°C ▪ 6000 hours up to 8000 hours
- High voltage up to 500V
- High reliability
- AEC-Q200 version available

HF Halogen Free RoHS & REACH COMPLIANT

SPECIFICATIONS

Items		Performance Characteristics							
Operating Temperature Range		-40 ~ +105°C				-25 ~ +105°C			
Rated Voltage Range	V_R	160 ~ 450V DC				500V DC			
Surge Voltage	V_S	($V_R \le 315V$): $V_S = 1.15 \cdot V_R$				($V_R > 315V$): $V_S = 1.10 \cdot V_R$			
Capacitance Range	C_R	1 ~ 330µF				4.7 ~ 120µF			
Cap. Tolerance	ΔC	±20% (120Hz ▪ 20°C)							
Leakage Current (20°C ▪ V_R applied)	I_{LEAK}	≤ $0.1 \cdot C_R \cdot V_R + 40\mu A$ ▪ After 1 minute [I_{LEAK} (µA) ; C_R (µF) ; V_R (V)]							
Dissipation Factor % (20°C ▪ 120Hz)	tanδ	V_R (V DC)	160	200	250	350	400	450	500
		tanδ (%)	15	15	15	20	20	20	24
Low Temperature Characteristics at 120Hz	Z ratio max.	V_R (V DC)	160	200	250	350	400	450	500
		Z-25°C/Z+20°C	3	3	3	5	5	6	6
		Z-40°C/Z+20°C	6	6	6	6	6	-	-

Lifetime Test			
Endurance 105°C (V_R & I_R applied)	Test	**6000 hours**	ø D 6.3 ~ 8 mm
		6000 hours	ø D 10 x L 9 mm
		8000 hours	ø D 10 x L 12.5 mm
		8000 hours	ø D > 10 mm
	△C/C_R	≤ ±20% of initial measured value	
	tanδ	≤ 200% of initial specified value	
	I_{Leak}	≤ the initial specified value	
Shelf Life 105°C (V_R = 0)	Test	**1000 hours**	
	△C/C_R	≤ ±20% of initial measured value	
	tanδ	≤ 200% of initial specified value	
	I_{Leak}	≤ the initial specified value	
	Before measurement: Restore capacitor to 20°C, apply V_R for 30 min according JIS-C-5101-4		

For further information please contact sales@capxon.org

STANDARD RATINGS

Part number shows bulk version with straight leads

V_R (V)	C_R (µF)	ø D (mm)	L (mm)	I_R ▪ Max. Ripple Current +105°C ▪ 120Hz (mA rms)	I_R ▪ Max. Ripple Current +105°C ▪ 100kHz (mA rms)	CapXon Part Number
160	1	6.3	11	20.4	51	FK010M160E110A ☐☐
	1	6.3	9	18.4	46	FK010M160E090A ☐☐
	1.5	6.3	11	22.4	56	FK1R5M160E110A ☐☐
	1.5	6.3	9	20.4	51	FK1R5M160E090A ☐☐
	2.2	6.3	11	28.4	71	FK2R2M160E110A ☐☐
	2.2	6.3	9	26	65	FK2R2M160E090A ☐☐
	3.3	6.3	11	32.4	81	FK3R3M160E110A ☐☐
	3.3	6.3	9	29.2	73	FK3R3M160E090A ☐☐
	4.7	6.3	11	36.4	91	FK4R7M160E110A ☐☐
	4.7	6.3	9	34.4	86	FK4R7M160E090A ☐☐
	5.6	6.3	11	38.4	96	FK5R6M160E110A ☐☐
	5.6	6.3	9	36.4	91	FK5R6M160E090A ☐☐
	5.6	8	11.5	44	110	FK5R6M160F115A ☐☐
	6.8	6.3	11	44	110	FK6R8M160E110A ☐☐
	6.8	8	11.5	52	130	FK6R8M160F115A ☐☐
	6.8	8	9	44	110	FK6R8M160F090A ☐☐
	8.2	8	11.5	60	150	FK8R2M160F115A ☐☐
	8.2	8	9	56	140	FK8R2M160F090A ☐☐
	10	8	11.5	96	240	FK100M160F115A ☐☐
	10	8	16	110	275	FK100M160F160A ☐☐
	10	8	9	88	220	FK100M160F090A ☐☐
	10	10	12.5	120	300	FK100M160G125A ☐☐
	15	8	16	110	275	FK150M160F160A ☐☐
	15	10	9	100	250	FK150M160G090A ☐☐
	22	8	20	180	450	FK220M160F200A ☐☐
	22	10	12.5	160	400	FK220M160G125A ☐☐
	22	10	16	180	450	FK220M160G160A ☐☐
	33	10	16	230	575	FK330M160G160A ☐☐
	33	10	20	250	625	FK330M160G200A ☐☐
	47	10	16	300	750	FK470M160G160A ☐☐
	47	10	20	300	750	FK470M160G200A ☐☐
	68	13	20	470	1175	FK680M160I200A ☐☐
	82	13	20	520	1300	FK820M160I200A ☐☐
	100	13	25	620	1395	FK101M160I250A ☐☐
	100	16	20	630	1418	FK101M160J200A ☐☐
	150	16	25	840	1890	FK151M160J250A ☐☐
	220	18	25	1090	2453	FK221M160K250A ☐☐
	270	16	31.5	1260	2835	FK271M160J315A ☐☐
	330	18	31.5	1400	3150	FK331M160K315A ☐☐

☐☐: Enter **blank** for Standard version ☐☐: Enter **X** for AEC-Q200 version

See "PACKAGING INFORMATION" to taped or formed products.

STANDARD RATINGS

Part number shows bulk version with straight leads

V_R (V)	C_R (µF)	ø D (mm)	L (mm)	I_R ▪ Max. Ripple Current +105°C ▪ 120Hz (mA rms)	I_R ▪ Max. Ripple Current +105°C ▪ 100kHz (mA rms)	CapXon Part Number
200	1	6.3	11	22.8	57	FK010M200E110A ☐☐
	1	6.3	9	21.2	53	FK010M200E090A ☐☐
	1.5	6.3	11	24.4	61	FK1R5M200E110A ☐☐
	1.5	6.3	9	22.8	57	FK1R5M200E090A ☐☐
	2.2	6.3	11	30	75	FK2R2M200E110A ☐☐
	2.2	6.3	9	27.6	69	FK2R2M200E090A ☐☐
	3.3	6.3	11	38.8	97	FK3R3M200E110A ☐☐
	3.3	6.3	9	34.8	87	FK3R3M200E090A ☐☐
	4.7	6.3	11	52	130	FK4R7M200E110A ☐☐
	4.7	8	9	52	130	FK4R7M200F090A ☐☐
	5.6	6.3	11	56	140	FK5R6M200E110A ☐☐
	5.6	8	11.5	64	160	FK5R6M200F115A ☐☐
	5.6	8	9	56	140	FK5R6M200F090A ☐☐
	6.8	8	11.5	76	190	FK6R8M200F115A ☐☐
	6.8	8	9	64	160	FK6R8M200F090A ☐☐
	8.2	8	11.5	84	210	FK8R2M200F115A ☐☐
	10	8	11.5	110	275	FK100M200F115A ☐☐
	10	8	16	120	300	FK100M200F160A ☐☐
	10	10	12.5	130	325	FK100M200G125A ☐☐
	10	10	9	110	275	FK100M200G090A ☐☐
	22	8	20	220	550	FK220M200F200A ☐☐
	22	10	16	220	550	FK220M200G160A ☐☐
	22	10	20	250	625	FK220M200G200A ☐☐
	33	10	16	260	650	FK330M200G160A ☐☐
	33	10	20	280	700	FK330M200G200A ☐☐
	47	13	16	360	900	FK470M200I160A ☐☐
	47	13	20	390	975	FK470M200I200A ☐☐
	68	13	20	470	1175	FK680M200I200A ☐☐
	68	13	25	520	1300	FK680M200I250A ☐☐
	100	13	25	630	1418	FK101M200I250A ☐☐
	100	16	25	680	1530	FK101M200J250A ☐☐
	150	18	25	900	2025	FK151M200K250A ☐☐
	220	16	31.5	1090	2453	FK221M200J315A ☐☐
250	1	6.3	11	23.6	59	FK010M250E110A ☐☐
	1	6.3	9	21.2	53	FK010M250E090A ☐☐
	1.5	6.3	11	24.4	61	FK1R5M250E110A ☐☐
	1.5	6.3	9	22.8	57	FK1R5M250E090A ☐☐
	2.2	6.3	11	30.4	76	FK2R2M250E110A ☐☐
	2.2	6.3	9	27.6	69	FK2R2M250E090A ☐☐
	2.2	8	11.5	38	95	FK2R2M250F115A ☐☐
	3.3	6.3	11	40	100	FK3R3M250E110A ☐☐
	3.3	6.3	9	34.8	87	FK3R3M250E090A ☐☐

☐: Enter **blank** for Standard version ☐: Enter **X** for AEC-Q200 version

See "PACKAGING INFORMATION" to taped or formed products.

STANDARD RATINGS

Part number shows bulk version with straight leads

V_R (V)	C_R (µF)	ø D (mm)	L (mm)	I_R ▪ Max. Ripple Current +105°C ▪ 120Hz (mA rms)	I_R ▪ Max. Ripple Current +105°C ▪ 100kHz (mA rms)	CapXon Part Number
250	3.3	8	11.5	56	140	FK3R3M250F115A ☐☐
	4.7	8	11.5	64	160	FK4R7M250F115A ☐☐
	4.7	8	16	72	180	FK4R7M250F160A ☐☐
	4.7	8	9	52	130	FK4R7M250F090A ☐☐
	4.7	10	12.5	76	190	FK4R7M250G125A ☐☐
	5.6	8	11.5	72	180	FK5R6M250F115A ☐☐
	5.6	8	9	64	160	FK5R6M250F090A ☐☐
	6.8	8	11.5	80	200	FK6R8M250F115A ☐☐
	6.8	8	16	92	230	FK6R8M250F160A ☐☐
	6.8	10	12.5	100	250	FK6R8M250G125A ☐☐
	8.2	8	16	88	220	FK8R2M250F160A ☐☐
	8.2	10	9	80	200	FK8R2M250G090A ☐☐
	10	8	16	120	300	FK100M250F160A ☐☐
	10	10	12.5	120	300	FK100M250G125A ☐☐
	15	10	16	130	325	FK150M250G160A ☐☐
	22	10	16	180	450	FK220M250G160A ☐☐
	22	10	20	200	500	FK220M250G200A ☐☐
	33	10	20	270	675	FK330M250G200A ☐☐
	33	13	16	270	675	FK330M250I160A ☐
	33	13	20	320	800	FK330M250I200A ☐☐
	47	13	20	400	1000	FK470M250I200A ☐☐
	47	13	25	430	1075	FK470M250I250A ☐☐
	56	13	25	500	1250	FK560M250I250A ☐☐
	68	16	25	560	1400	FK680M250J250A ☐☐
	100	16	25	680	1530	FK101M250J250A ☐☐
	150	16	31.5	900	2025	FK151M250J315A ☐☐
	220	18	31.5	1130	2543	FK221M250K315A ☐☐
350	1	6.3	11	26.4	66	FK010M350E110A ☐☐
	1	6.3	9	21.2	53	FK010M350E090A ☐☐
	1	8	11.5	30.8	77	FK010M350F115A ☐☐
	1.5	6.3	11	30	75	FK1R5M350E110A ☐☐
	1.5	6.3	9	26.4	66	FK1R5M350E090A ☐☐
	2.2	6.3	11	38	95	FK2R2M350E110A ☐☐
	2.2	8	11.5	48	120	FK2R2M350F115A ☐☐
	2.2	8	9	35.2	88	FK2R2M350F090A ☐☐
	3.3	8	11.5	56	140	FK3R3M350F115A ☐☐
	3.3	8	9	48	120	FK3R3M350F090A ☐☐
	3.3	10	12.5	64	160	FK3R3M350G125A ☐☐
	4.7	8	16	72	180	FK4R7M350F160A ☐☐
	4.7	10	12.5	76	190	FK4R7M350G125A ☐☐
	4.7	10	9	64	160	FK4R7M350G090A ☐☐
	5.6	8	16	84	210	FK5R6M350F160A ☐☐

☐: Enter **blank** for Standard version ☐: Enter **X** for AEC-Q200 version

See "PACKAGING INFORMATION" to taped or formed products.

STANDARD RATINGS

Part number shows bulk version with straight leads

V_R (V)	C_R (µF)	ø D (mm)	L (mm)	I_R ▪ Max. Ripple Current +105°C ▪ 120Hz (mA rms)	I_R ▪ Max. Ripple Current +105°C ▪ 100kHz (mA rms)	CapXon Part Number
350	5.6	10	12.5	88	220	FK5R6M350G125A ☐
	6.8	8	20	110	275	FK6R8M350F200A ☐
	6.8	10	16	110	275	FK6R8M350G160A ☐
	8.2	8	20	130	325	FK8R2M350F200A ☐
	10	8	20	130	325	FK100M350F200A ☐
	10	10	16	130	325	FK100M350G160A ☐
	15	10	20	150	375	FK150M350G200A ☐
	22	13	20	260	650	FK220M350I200A ☐
	33	13	25	380	950	FK330M350I250A ☐
	47	16	20	430	1075	FK470M350J200A ☐
	47	16	25	460	1150	FK470M350J250A ☐
	68	18	20	560	1400	FK680M350K200A ☐
	68	18	25	600	1500	FK680M350K250A ☐
	82	18	25	610	1525	FK820M350K250A ☐
	100	16	31.5	720	1620	FK101M350J315A ☐
	150	18	35.5	960	2160	FK151M350K355A ☐
400	1	6.3	11	30.4	76	FK010M400E110A ☐
	1	6.3	9	25.2	63	FK010M400E090A ☐
	1.5	6.3	9	30.4	76	FK1R5M400E090A ☐
	1.5	8	11.5	36.4	91	FK1R5M400F115A ☐
	2.2	6.3	11	44	110	FK2R2M400E110A ☐
	2.2	8	11.5	48	120	FK2R2M400F115A ☐
	2.2	8	9	40	100	FK2R2M400F090A ☐
	3.3	8	11.5	60	150	FK3R3M400F115A ☐
	3.3	8	9	52	130	FK3R3M400F090A ☐
	4.7	8	11.5	80	200	FK4R7M400F115A ☐
	4.7	8	16	88	220	FK4R7M400F160A ☐
	4.7	10	12.5	92	230	FK4R7M400G125A ☐
	4.7	10	9	72	180	FK4R7M400G090A ☐
	5.6	8	16	88	220	FK5R6M400F160A ☐
	5.6	10	12.5	100	250	FK5R6M400G125A ☐
	6.8	8	16	110	275	FK6R8M400F160A ☐
	6.8	10	12.5	110	275	FK6R8M400G125A ☐
	8.2	8	16	110	275	FK8R2M400F160A ☐
	8.2	10	12.5	120	300	FK8R2M400G125A ☐
	8.2	10	16	130	325	FK8R2M400G160A ☐
	10	8	20	140	350	FK100M400F200A ☐
	10	10	16	140	350	FK100M400G160A ☐
	10	10	20	160	400	FK100M400G200A ☐
	15	10	20	190	475	FK150M400G200A ☐
	15	13	16	200	500	FK150M400I160A ☐
	22	13	20	260	650	FK220M400I200A ☐

☐: Enter **blank** for Standard version ☐: Enter **X** for AEC-Q200 version

See "PACKAGING INFORMATION" to taped or formed products.

For further information please contact sales@capxon.org

STANDARD RATINGS

Part number shows bulk version with straight leads

V_R (V)	C_R (µF)	ø D (mm)	L (mm)	I_R ▪ Max. Ripple Current +105°C ▪ 120Hz (mA rms)	I_R ▪ Max. Ripple Current +105°C ▪ 100kHz (mA rms)	CapXon Part Number
400	33	13	25	360	900	FK330M400I250A ☐
	33	16	20	360	900	FK330M400J200A ☐☐
	47	16	25	470	1175	FK470M400J250A ☐☐
	56	18	25	560	1400	FK560M400K250A ☐☐
	68	18	25	590	1475	FK680M400K250A ☐☐
	82	16	31.5	630	1575	FK820M400J315A ☐☐
	100	18	31.5	770	1733	FK101M400K315A ☐☐
	120	18	31.5	830	1868	FK121M400K315A ☐☐
	150	18	35.5	930	2093	FK151M400K355A ☐☐
450	1	6.3	11	30.4	76	FK010M450E110A ☐☐
	1	6.3	9	25.2	63	FK010M450E090A ☐☐
	1.5	8	11.5	36.4	91	FK1R5M450F115A ☐☐
	2.2	8	11.5	48	120	FK2R2M450F115A ☐☐
	2.2	8	16	56	140	FK2R2M450F160A ☐☐
	2.2	8	9	40	100	FK2R2M450F090A ☐☐
	2.2	10	12.5	60	150	FK2R2M450G125A ☐☐
	3.3	8	11.5	64	160	FK3R3M450F115A ☐☐
	3.3	10	12.5	80	200	FK3R3M450G125A ☐☐
	3.3	10	9	68	170	FK3R3M450G090A ☐☐
	4.7	8	16	100	250	FK4R7M450F160A ☐☐
	4.7	10	12.5	100	250	FK4R7M450G125A ☐☐
	4.7	10	16	110	275	FK4R7M450G160A ☐☐
	5.6	10	16	110	275	FK5R6M450G160A ☐☐
	6.8	8	20	120	300	FK6R8M450F200A ☐☐
	6.8	10	16	130	325	FK6R8M450G160A ☐☐
	6.8	10	20	140	350	FK6R8M450G200A ☐☐
	8.2	10	20	140	350	FK8R2M450G200A ☐☐
	10	10	20	160	400	FK100M450G200A ☐☐
	15	13	20	220	550	FK150M450I200A ☐☐
	22	13	25	290	725	FK220M450I250A ☐☐
	22	16	20	290	725	FK220M450J200A ☐☐
	33	13	25	360	900	FK330M450I250A ☐☐
	33	16	25	390	975	FK330M450J250A ☐☐
	47	16	25	470	1175	FK470M450J250A ☐☐
	47	18	25	500	1250	FK470M450K250A ☐☐
	68	16	31.5	630	1575	FK680M450J315A ☐☐
	68	18	25	590	1475	FK680M450K250A ☐☐
	82	18	31.5	680	1700	FK820M450K315A ☐☐
	100	18	35.5	800	1800	FK101M450K355A ☐☐

☐: Enter **blank** for Standard version ☐: Enter **X** for AEC-Q200 version

See "PACKAGING INFORMATION" to taped or formed products.

STANDARD RATINGS

Part number shows bulk version with straight leads

V_R (V)	C_R (µF)	ø D (mm)	L (mm)	I_R ▪ Max. Ripple Current +105°C ▪ 120Hz (mA rms)	I_R ▪ Max. Ripple Current +105°C ▪ 100kHz (mA rms)	CapXon Part Number
500	4.7	10	20	88	220	FK4R7M500G200A ☐
	5.6	10	20	92	230	FK5R6M500G200A ☐
	6.8	10	20	130	325	FK6R8M500G200A ☐
	8.2	10	20	130	325	FK8R2M500G200A ☐
	10	13	20	140	350	FK100M500I200A ☐
	15	13	25	180	450	FK150M500I250A ☐
	22	16	25	230	575	FK220M500J250A ☐
	33	18	25	390	975	FK330M500K250A ☐
	47	16	31.5	500	1250	FK470M500J315A ☐
	56	18	31.5	570	1425	FK560M500K315A ☐
	68	18	35.5	630	1575	FK680M500K355A ☐
	82	18	40	680	1700	FK820M500K400A ☐
	100	18	45	800	1800	FK101M500K450A ☐
	120	22	45	840	1890	FK121M500M450A ☐

☐: Enter **blank** for Standard version ☐: Enter **X** for AEC-Q200 version

See "PACKAGING INFORMATION" to taped or formed products.

DIMENSIONS ▪ All dimensions in mm

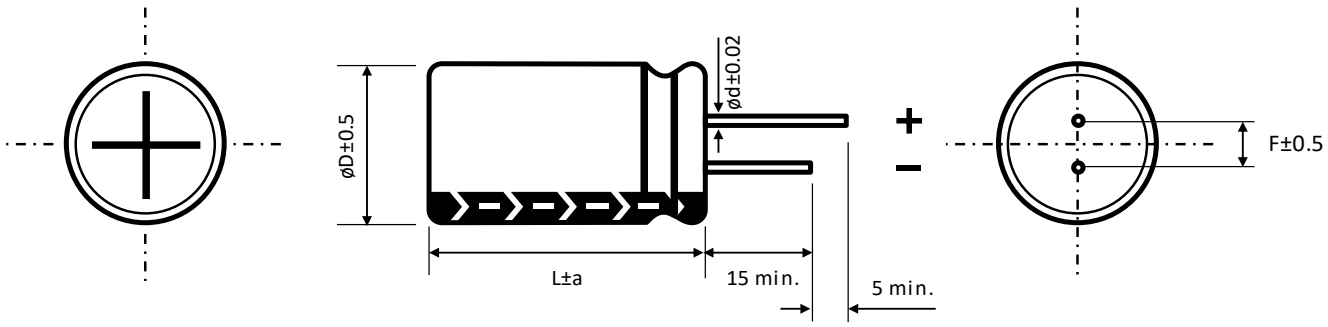

ø D	6.3	8		10	13	16	18	22
F	2.5	3.5		5	5	7.5	7.5	10
ø d	0.5	L < 20	L ≥ 20	0.6		0.8		
		0.5	0.6					

a	ø D < 16	ø D = 16		ø D = 18		ø D > 18
	1.5	L = 25 to 35.5	L < 25 and L ≥ 40	L = 25 to 31.5	L < 25 and L ≥ 35.5	2
		1.5	2	1.5	2	

MULTIPLIER K_f for RIPPLE CURRENT vs. FREQUENCY

C_R (µF) / Frequency (Hz)	100/120	1k	10k	100k
1 ~ 82	1	1.75	2.25	2.5
≥ 100	1	1.67	2.05	2.25

PRECAUTIONS, GUIDELINES AND PACKAGING INFORMATON

Unless otherwise agreed in individual specifications, all products are subject to our “General Precautions and Guidelines” as well as our “Packaging Information”. Please refer to the following links in the table.

General Precautions and Guidelines	Packaging Information Liquid Radial
Page 837	Page 336

DISCLAIMER

All product related data (e.g. specification, statements and general information) are subject to change without any notice. It is necessary that the customer observes all product related technical / application information and handling instructions.

CapXon products are designed and manufactured according to severe quality and safety standards. Under no circumstance, CapXon warrants that any CapXon product is suitable for the purposes intended for your application, even CapXon knows the application. It is customer's duty and obligation to check and make sure that CapXon products are suitable for the purposes intended and select the correct and proper CapXon product. Customers are requested to perform a sufficient validation and reliability evaluation to assure needed safety level and reliability performance by suitable designs and to apply proper safeguards (e.g. redundancies, protective circuits).

Particular operating conditions (ambient temperature, ripple current, voltage, thermal resistance, etc.) as well as storage, production or assembly may affect the performance and the lifetime of the capacitor. Please consult CapXon for lifetime estimation, failure mode considerations or worst-case scenarios according to the product technology, product tolerances / deviations or change of the characteristics of the capacitor due to shipment, storage, handling, production and usage.

For aerospace or military application, life-saving, life-sustaining, safety critical applications or any application where failure may cause severe personal injury or death, please consult us before design-in the capacitor in your application.

Except for the written expressed warranties, CapXon does not impliedly, by assumption or whatever else, warrant, undertake, promise any other warranty or guaranty for any CapXon product.

For further information, please visit our website www.capxongroup.com or contact CapXon directly.

ZH SERIES ▪ LOW IMPEDANCE, MINIATURIZED 105°C TYPE



KEY FEATURES

MINIATURIZED LOW IMPEDANCE

- **ALUMINUM ELECTROLYTIC CAPACITOR** ▪ THT type
- Endurance: 105°C ▪ 6000 hours up to 10000 hours
- Low impedance and high ripple current
- Wide capacitance range
- Low voltage version

HF Halogen Free RoHS & REACH COMPLIANT

SPECIFICATIONS

Items		Performance Characteristics								
Operating Temperature Range		-40 ~ +105°C								
Rated Voltage Range	V_R	6.3 ~ 100V DC								
Surge Voltage	V_S	$V_S = 1.15 \cdot V_R$								
Capacitance Range	C_R	8.2 ~ 8200µF								
Cap. Tolerance	ΔC	±20% (120Hz ▪ 20°C)								
Leakage Current (20°C ▪ V_R applied)	I_{LEAK}	≤ $0.01 \cdot C_R \cdot V_R$ or 3µA, whichever is greater ▪ After 2 minutes [I_{LEAK} (µA) ; C_R (µF) ; V_R (V)]								
Dissipation Factor % (20°C ▪ 120Hz)	tanδ	V_R (V DC)	6.3	10	16	25	35	50	63	80	100
		tanδ (%)	22	19	16	14	12	10	9	8	8
		For C_R ≥ 1000µF, add 2% per every multiple 1000µF of rated capacitance value									
Low Temperature Characteristics at 120Hz	Z ratio max.	V_R (V DC)	6.3	10	16	25	35	50	63	80	100
		Z-25°C/Z+20°C	2	2	2	2	2	2	2	2	2
		Z-40°C/Z+20°C	3	3	3	3	3	3	3	3	3
		For capacitance > 1000µF									
		Z-25°C/Z+20°C	Add 0.5 for every multiple 1000µF of rated capacitance value								
		Z-40°C/Z+20°C	Add 1 for every multiple 1000µF of rated capacitance value								

Lifetime Test			
Endurance 105°C (V_R & I_R applied)	Test	**6000 hours**	ø D ≤ 6.3 mm
		8000 hours	ø D = 8 mm
		10000 hours	ø D ≥ 10 mm
	△C/C_R	≤ ±25% of initial measured value	
	tanδ	≤ 200% of initial specified value	
	I_{Leak}	≤ the initial specified value	
Shelf Life 105°C (V_R = 0)	Test	**1000 hours**	
	△C/C_R	≤ ±25% of initial measured value	
	tanδ	≤ 200% of initial specified value	
	I_{Leak}	≤ the initial specified value	
	Before measurement: Restore capacitor to 20°C, apply V_R for 30 min according JIS-C-5101-4		

For further information please contact sales@capxon.org

STANDARD RATINGS

Part number shows bulk version with straight leads

V_R (V)	C_R (µF)	ø D (mm)	L (mm)	Z ▪ Max. Impedance +20°C ▪ 100kHz (mΩ)	I_R ▪ Max. Ripple Current +105°C ▪ 100kHz (mA rms)	CapXon Part Number
6.3	220	5	11	230	355	ZH221M6R3C110A
	470	6.3	11	100	550	ZH471M6R3E110A
	820	8	11.5	60	955	ZH821M6R3F115A
	1200	8	16	50	1260	ZH122M6R3F160A
	1200	10	12.5	44	1340	ZH122M6R3G125A
	1500	8	20	34	1510	ZH152M6R3F200A
	1800	10	16	33	1770	ZH182M6R3G160A
	2200	10	20	25	1970	ZH222M6R3G200A
	2700	10	25	23	2260	ZH272M6R3G250A
	3900	13	20	22	2490	ZH392M6R3I200A
	4700	13	25	20	2910	ZH472M6R3I250A
	5600	13	30	18	3460	ZH562M6R3I300A
	6800	13	35	17	3580	ZH682M6R3I350A
	6800	16	20	20	3260	ZH682M6R3J200A
	8200	16	25	18	3640	ZH822M6R3J250A
10	150	5	11	230	355	ZH151M010C110A
	330	6.3	11	100	550	ZH331M010E110A
	680	8	11.5	60	955	ZH681M010F115A
	1000	8	16	50	1260	ZH102M010F160A
	1000	10	12.5	49	1340	ZH102M010G125A
	1500	8	20	34	1510	ZH152M010F200A
	1500	10	16	33	1770	ZH152M010G160A
	1800	10	20	25	1970	ZH182M010G200A
	2200	10	25	23	2260	ZH222M010G250A
	2700	13	20	22	2440	ZH272M010I200A
	3300	13	20	21	2490	ZH332M010I200A
	3900	13	25	20	2910	ZH392M010I250A
	4700	13	30	18	3460	ZH472M010I300A
	4700	16	20	20	3260	ZH472M010J200A
	5600	13	35	17	3580	ZH562M010I350A
	6800	16	25	18	3640	ZH682M010J250A
16	100	5	11	230	355	ZH101M016C110A
	220	6.3	11	100	550	ZH221M016E110A
	470	8	11.5	60	955	ZH471M016F115A
	680	8	16	50	1260	ZH681M016F160A
	680	10	12.5	44	1340	ZH681M016G125A
	1000	8	20	34	1510	ZH102M016F200A
	1000	10	16	33	1770	ZH102M016G160A
	1500	10	20	25	1970	ZH152M016G200A
	1800	10	25	23	2260	ZH182M016G250A
	2200	13	20	22	2490	ZH222M016I200A
	2700	13	25	20	2910	ZH272M016I250A
	3300	13	30	18	3460	ZH332M016I300A
	3300	16	20	23	3260	ZH332M016J200A

See "PACKAGING INFORMATION" to taped or formed products.

STANDARD RATINGS

Part number shows bulk version with straight leads

V_R (V)	C_R (µF)	ø D (mm)	L (mm)	Z ▪ Max. Impedance +20°C ▪ 100kHz (mΩ)	I_R ▪ Max. Ripple Current +105°C ▪ 100kHz (mA rms)	CapXon Part Number
16	3900	13	35	17	3580	ZH392M016I350A
	4700	16	25	18	3640	ZH472M016J250A
25	68	5	11	240	355	ZH680M025C110A
	150	6.3	11	100	550	ZH151M025E110A
	330	8	11.5	60	955	ZH331M025F115A
	390	8	16	50	1260	ZH391M025F160A
	470	10	12.5	44	1340	ZH471M025G125A
	560	8	20	34	1510	ZH561M025F200A
	680	10	16	33	1770	ZH681M025G160A
	820	10	20	25	1970	ZH821M025G200A
	1000	10	20	24	2045	ZH102M025G200A
	1000	10	25	23	2260	ZH102M025G250A
	1500	13	20	22	2490	ZH152M025I200A
	1800	13	25	20	2910	ZH182M025I250A
	2200	13	30	18	3460	ZH222M025I300A
	2200	16	20	20	3260	ZH222M025J200A
	2700	13	35	17	3580	ZH272M025I350A
	3300	16	25	18	3640	ZH332M025J250A
35	47	5	11	500	355	ZH470M035C110A
	100	6.3	11	110	550	ZH101M035E110A
	220	8	11.5	62	955	ZH221M035F115A
	270	8	16	60	1260	ZH271M035F160A
	330	10	12.5	43	1340	ZH331M035G125A
	390	8	20	32	1510	ZH391M035F200A
	470	10	16	33	1770	ZH471M035G160A
	560	10	20	30	1970	ZH561M035G200A
	680	10	25	28	2260	ZH681M035G250A
	820	10	25	27	2360	ZH821M035G250A
	1000	10	30	25	2580	ZH102M035G300A
	1000	13	20	22	2490	ZH102M035I200A
	1200	13	25	18	2910	ZH122M035I250A
	1500	13	30	18	3460	ZH152M035I300A
	1500	16	20	23	3260	ZH152M035J200A
	1800	13	35	17	3580	ZH182M035I350A
	2200	16	25	18	3640	ZH222M035J250A
50	27	5	11	400	248	ZH270M050C110A
	56	6.3	11	150	395	ZH560M050E110A
	100	8	11.5	110	755	ZH101M050F115A
	120	8	16	65	960	ZH121M050F160A
	150	10	12.5	67	989	ZH151M050G125A
	180	8	20	51	1200	ZH181M050F200A
	220	10	16	46	1380	ZH221M050G160A
	270	10	20	33	1590	ZH271M050G200A
	330	10	20	33	1600	ZH331M050G200A

See "PACKAGING INFORMATION" to taped or formed products.

STANDARD RATINGS

Part number shows bulk version with straight leads

V_R (V)	C_R (µF)	ø D (mm)	L (mm)	Z ▪ Max. Impedance +20°C ▪ 100kHz (mΩ)	I_R ▪ Max. Ripple Current +105°C ▪ 100kHz (mA rms)	CapXon Part Number
50	330	10	25	32	1880	ZH331M050G250A
	470	13	20	32	2060	ZH471M050I200A
	560	13	25	28	2420	ZH561M050I250A
	680	13	30	26	2870	ZH681M050I300A
	820	13	35	24	2970	ZH821M050I350A
	820	16	20	28	2740	ZH821M050J200A
	1000	16	25	26	3020	ZH102M050J250A
63	18	5	11	980	183	ZH180M063C110A
	47	6.3	11	600	288	ZH470M063E110A
	82	8	11.5	300	535	ZH820M063F115A
	100	8	16	200	698	ZH101M063F160A
	120	10	12.5	165	735	ZH121M063G125A
	150	8	20	140	871	ZH151M063F200A
	180	10	16	130	1008	ZH181M063G160A
	220	10	20	120	1110	ZH221M063G200A
	270	10	20	86	1210	ZH271M063G200A
	270	13	16	90	1210	ZH271M063I160A
	270	13	20	88	1330	ZH271M063I200A
	330	10	25	76	1420	ZH331M063G250A
	330	13	25	73	1610	ZH331M063I250A
	390	13	20	66	1580	ZH391M063I200A
	470	13	25	48	2000	ZH471M063I250A
	470	13	30	46	2170	ZH471M063I300A
	470	16	20	47	2090	ZH471M063J200A
	560	13	30	40	2420	ZH561M063I300A
	560	16	20	48	2110	ZH561M063J200A
	680	13	35	38	2630	ZH681M063I350A
	820	13	40	32	2950	ZH821M063I400A
	820	16	25	37	2740	ZH821M063J250A
	820	18	20	43	2510	ZH821M063K200A
	1200	16	31.5	29	3000	ZH122M063J315A
	1200	18	25	36	2810	ZH122M063K250A
	1500	16	35.5	26	3050	ZH152M063J355A
	1500	18	31.5	30	3310	ZH152M063K315A
	1800	16	40	24	3580	ZH182M063J400A
	1800	18	35.5	25	3580	ZH182M063K355A
	2200	18	40	23	3680	ZH222M063K400A
80	12	5	11	1540	173	ZH120M080C110A
	33	6.3	11	630	277	ZH330M080E110A
	56	8	11.5	400	472	ZH560M080F115A
	68	8	16	280	595	ZH680M080F160A
	82	10	12.5	250	634	ZH820M080G125A
	100	8	20	210	745	ZH101M080F200A

See "PACKAGING INFORMATION" to taped or formed products.

STANDARD RATINGS

Part number shows bulk version with straight leads

V_R (V)	C_R (µF)	ø D (mm)	L (mm)	Z ▪ Max. Impedance +20°C ▪ 100kHz (mΩ)	I_R ▪ Max. Ripple Current +105°C ▪ 100kHz (mA rms)	CapXon Part Number
80	120	10	16	187	790	ZH121M080G160A
	180	10	20	130	1050	ZH181M080G200A
	180	13	16	140	985	ZH181M080I160A
	220	10	25	120	1180	ZH221M080G250A
	270	13	20	94	1440	ZH271M080I200A
	330	13	25	66	1630	ZH331M080I250A
	390	13	30	56	1960	ZH391M080I300A
	390	16	20	64	1760	ZH391M080J200A
	470	13	35	47	2150	ZH471M080I350A
	560	13	40	45	2350	ZH561M080I400A
	560	16	25	49	2220	ZH561M080J250A
	560	18	20	59	1960	ZH561M080K200A
	680	16	31.5	38	2410	ZH681M080J315A
	820	16	35.5	32	2610	ZH821M080J355A
	820	18	25	42	2280	ZH821M080K250A
	1000	16	40	33	2870	ZH102M080J400A
	1000	18	31.5	36	2480	ZH102M080K315A
	1200	18	35.5	33	2870	ZH122M080K355A
	1500	18	40	32	3520	ZH152M080K400A
100	8.2	5	11	1540	173	ZH8R2M100C110A
	18	6.3	11	627	277	ZH180M100E110A
	33	8	11.5	420	472	ZH330M100F115A
	47	8	16	400	595	ZH470M100F160A
	56	10	12.5	350	634	ZH560M100G125A
	68	8	20	300	745	ZH680M100F200A
	82	10	16	220	790	ZH820M100G160A
	100	10	20	150	1050	ZH101M100G200A
	100	13	16	160	985	ZH101M100I160A
	120	10	25	140	1180	ZH121M100G250A
	150	13	20	94	1440	ZH151M100I200A
	220	13	25	66	1660	ZH221M100I250A
	270	13	30	56	1960	ZH271M100I300A
	270	16	20	64	1760	ZH271M100J200A
	330	13	35	47	2150	ZH331M100I350A
	390	13	40	40	2350	ZH391M100I400A
	390	16	25	49	2220	ZH391M100J250A
	390	18	20	59	1960	ZH391M100K200A
	470	16	31.5	36	2410	ZH471M100J315A
	470	18	25	42	2280	ZH471M100K250A
	560	16	35.5	32	2610	ZH561M100J355A
	560	18	31.5	34	2480	ZH561M100K315A
	680	16	40	30	2870	ZH681M100J400A
	680	18	35.5	30	2870	ZH681M100K355A
	820	18	40	29	3520	ZH821M100K400A

See "PACKAGING INFORMATION" to taped or formed products.

For further information please contact sales@capxon.org

DIMENSIONS ▪ All dimensions in mm

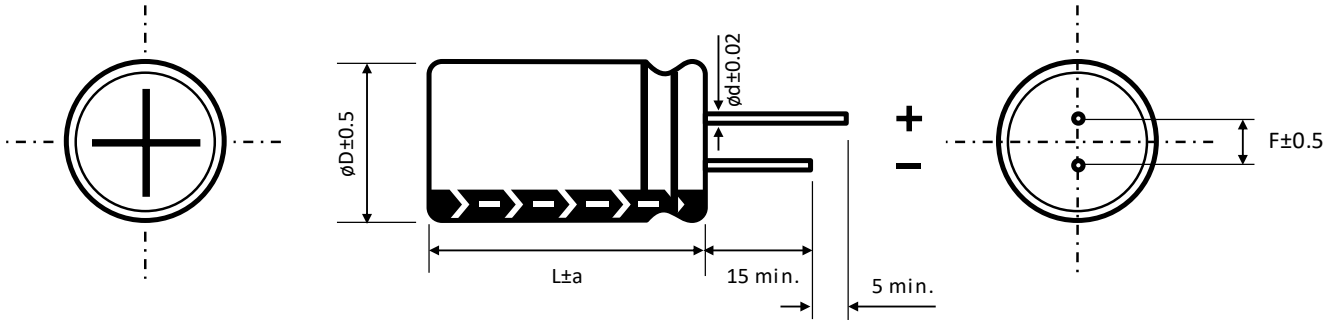

ø D	5	6.3	8		10	13	16	18
F	2	2.5	3.5		5	5	7.5	7.5
ø d	0.5		L < 20	L ≥ 20	0.6		0.8	
			0.5	0.6				

a	ø D < 16	ø D = 16		ø D = 18	
	1.5	L = 25 to 35.5	L < 25 and L ≥ 40	L = 25 to 31.5	L < 25 and L ≥ 35.5
		1.5	2	1.5	2

MULTIPLIER K_f for RIPPLE CURRENT vs. FREQUENCY

C_R (µF) / Frequency (Hz)	100/120	1k	10k	100k
8.2 ~ 33	0.42	0.7	0.9	1
47 ~ 270	0.5	0.73	0.92	1
330 ~ 680	0.55	0.77	0.94	1
820 ~ 1800	0.6	0.8	0.96	1
2200 ~ 8200	0.7	0.85	0.98	1

PRECAUTIONS, GUIDELINES AND PACKAGING INFORMATON

Unless otherwise agreed in individual specifications, all products are subject to our “General Precautions and Guidelines” as well as our “Packaging Information”. Please refer to the following links in the table.

General Precautions and Guidelines	Packaging Information Liquid Radial
Page 837	Page 336

For further information please contact sales@capxon.org

DISCLAIMER

All product related data (e.g. specification, statements and general information) are subject to change without any notice. It is necessary that the customer observes all product related technical / application information and handling instructions.

CapXon products are designed and manufactured according to severe quality and safety standards. Under no circumstance, CapXon warrants that any CapXon product is suitable for the purposes intended for your application, even CapXon knows the application. It is customer's duty and obligation to check and make sure that CapXon products are suitable for the purposes intended and select the correct and proper CapXon product. Customers are requested to perform a sufficient validation and reliability evaluation to assure needed safety level and reliability performance by suitable designs and to apply proper safeguards (e.g. redundancies, protective circuits).

Particular operating conditions (ambient temperature, ripple current, voltage, thermal resistance, etc.) as well as storage, production or assembly may affect the performance and the lifetime of the capacitor. Please consult CapXon for lifetime estimation, failure mode considerations or worst-case scenarios according to the product technology, product tolerances / deviations or change of the characteristics of the capacitor due to shipment, storage, handling, production and usage.

For aerospace or military application, life-saving, life-sustaining, safety critical applications or any application where failure may cause severe personal injury or death, please consult us before design-in the capacitor in your application.

Except for the written expressed warranties, CapXon does not impliedly, by assumption or whatever else, warrant, undertake, promise any other warranty or guaranty for any CapXon product.

For further information, please visit our website www.capxongroup.com or contact CapXon directly.

FL SERIES ▪ LONG LIFE, AUTOMOTIVE 105°C TYPE



KEY FEATURES

AEC-Q 200 HIGH VOLTAGE

- **ALUMINUM ELECTROLYTIC CAPACITOR** ▪ THT type
- Endurance: 105°C ▪ 8000 hours up to 12000 hours
- High voltage up to 500V
- High reliability
- AEC-Q200 version available

HF Halogen Free RoHS & REACH COMPLIANT

SPECIFICATIONS

Items		Performance Characteristics								
Operating Temperature Range		-40 ~ +105°C					-25 ~ +105°C			
Rated Voltage Range	V_R	160 ~ 450V DC					500V DC			
Surge Voltage	V_S	($V_R \le 315V$): $V_S = 1.15 \cdot V_R$					($V_R > 315V$): $V_S = 1.10 \cdot V_R$			
Capacitance Range	C_R	1 ~ 680µF					10 ~ 68µF			
Cap. Tolerance	ΔC	±20% (120Hz ▪ 20°C)								
Leakage Current (20°C ▪ V_R applied)	I_{LEAK}	≤ $0.1 \cdot C_R \cdot V_R$ + 40µA ▪ After 1 minute [I_{LEAK} (µA) ; C_R (µF) ; V_R (V)]								
Dissipation Factor % (20°C ▪ 120Hz)	tanδ	V_R (V DC)	160	200	220	250	350	400	420	450	500
		tanδ (%)	15	15	15	15	20	20	20	20	24
Low Temperature Characteristics at 120Hz	Z ratio max.	V_R (V DC)	160	200	220	250	350	400	420	450	500
		Z-25°C/Z+20°C	3	3	3	3	5	5	6	6	6
		Z-40°C/Z+20°C	6	6	6	6	6	6	-	-	-

Lifetime Test			
Endurance 105°C (V_R & I_R applied)	Test	**8000 hours**	ø D = 6.3 ~ 8 mm
		10000 hours	ø D = 10 mm
		12000 hours	ø D ≥ 13 mm ▪ ≤450V
		10000 hours	ø D ≥ 13 mm ▪ 500V
	△C/C_R	≤ ±20% of initial measured value	
	tanδ	≤ 200% of initial specified value	
	I_{Leak}	≤ the initial specified value	
Shelf Life 105°C (V_R = 0)	Test	**1000 hours**	
	△C/C_R	≤ ±20% of initial measured value	
	tanδ	≤ 200% of initial specified value	
	I_{Leak}	≤ the initial specified value	
	Before measurement: Restore capacitor to 20°C, apply V_R for 30 min according JIS-C-5101-4		

For further information please contact sales@capxon.org

STANDARD RATINGS

Part number shows bulk version with straight leads

V_R (V)	C_R (µF)	ø D (mm)	L (mm)	I_R ▪ Max. Ripple Current +105°C ▪ 120Hz (mA rms)	I_R ▪ Max. Ripple Current +105°C ▪ 100kHz (mA rms)	CapXon Part Number
160	1	6.3	11	18.4	46	FL010M160E110A ☐
	1.5	6.3	11	20.4	51	FL1R5M160E110A ☐
	2.2	6.3	11	24.8	62	FL2R2M160E110A ☐
	3.3	6.3	11	37.2	93	FL3R3M160E110A ☐
	4.7	8	11.5	38	95	FL4R7M160F115A ☐
	5.6	8	11.5	40	100	FL5R6M160F115A ☐
	6.8	8	11.5	50	125	FL6R8M160F115A ☐
	6.8	8	16	59.2	148	FL6R8M160F160A ☐
	10	8	11.5	72	180	FL100M160F115A ☐
	15	8	16	100	250	FL150M160F160A ☐
	15	10	12.5	100	250	FL150M160G125A ☐
	22	10	16	140	350	FL220M160G160A ☐
	22	10	20	150	375	FL220M160G200A ☐
	33	10	16	190	475	FL330M160G160A ☐
	33	10	20	210	525	FL330M160G200A ☐
	39	10	16	240	600	FL390M160G160A ☐
	47	10	20	300	750	FL470M160G200A ☐
	56	10	20	310	775	FL560M160G200A ☐
	68	13	20	480	1200	FL680M160I200A ☐
	68	13	25	520	1300	FL680M160I250A ☐
	82	10	25	440	1100	FL820M160G250A ☐
	82	13	20	510	1275	FL820M160I200A ☐
	100	13	20	590	1328	FL101M160I200A ☐
	100	13	25	630	1418	FL101M160I250A ☐
	100	16	20	630	1418	FL101M160J200A ☐
	150	13	25	730	1643	FL151M160I250A ☐
	150	16	20	770	1733	FL151M160J200A ☐
	150	16	25	820	1845	FL151M160J250A ☐
	180	16	20	870	1958	FL181M160J200A ☐
	220	16	25	1020	2295	FL221M160J250A ☐
	220	18	20	1000	2250	FL221M160K200A ☐
	220	18	25	1040	2340	FL221M160K250A ☐
	330	16	31.5	1350	3038	FL331M160J315A ☐
	330	18	31.5	1380	3105	FL331M160K315A ☐
	390	16	35.5	1510	3398	FL391M160J355A ☐
	470	16	40	1710	3848	FL471M160J400A ☐
	470	18	35.5	1720	3870	FL471M160K355A ☐
	560	18	40	1910	4298	FL561M160K400A ☐
	680	18	45	2130	4793	FL681M160K450A ☐

☐: Enter **blank** for Standard version ☐: Enter **X** for AEC-Q200 version

See "PACKAGING INFORMATION" to taped or formed products.

For further information please contact sales@capxon.org

STANDARD RATINGS

Part number shows bulk version with straight leads

V_R (V)	C_R (µF)	ø D (mm)	L (mm)	I_R ▪ Max. Ripple Current +105°C ▪ 120Hz (mA rms)	I_R ▪ Max. Ripple Current +105°C ▪ 100kHz (mA rms)	CapXon Part Number
200	1	6.3	11	26	65	FL010M200E110A ☐
	1.5	6.3	11	28	70	FL1R5M200E110A ☐
	2.2	6.3	11	34	85	FL2R2M200E110A ☐
	3.3	6.3	11	46	115	FL3R3M200E110A ☐
	4.7	8	11.5	64	160	FL4R7M200F115A ☐
	5.6	8	11.5	66.4	166	FL5R6M200F115A ☐
	6.8	8	11.5	70	175	FL6R8M200F115A ☐
	6.8	10	12.5	76	190	FL6R8M200G125A ☐
	10	8	16	92	230	FL100M200F160A ☐
	10	10	16	100	250	FL100M200G160A ☐
	12	10	12.5	100	250	FL120M200G125A ☐
	15	8	20	140	350	FL150M200F200A ☐
	22	10	16	180	450	FL220M200G160A ☐
	22	10	20	200	500	FL220M200G200A ☐
	27	10	16	200	500	FL270M200G160A ☐
	33	10	20	260	650	FL330M200G200A ☐
	33	13	20	300	750	FL330M200I200A ☐
	47	10	20	310	775	FL470M200G200A ☐
	47	13	20	400	1000	FL470M200I200A ☐
	56	10	25	380	950	FL560M200G250A ☐
	68	13	20	470	1175	FL680M200I200A ☐
	68	13	25	520	1300	FL680M200I250A ☐
	68	16	20	520	1300	FL680M200J200A ☐
	82	16	20	560	1400	FL820M200J200A ☐
	100	13	25	640	1440	FL101M200I250A ☐
	100	16	20	670	1508	FL101M200J200A ☐
	100	16	25	690	1553	FL101M200J250A ☐
	100	18	20	710	1598	FL101M200K200A ☐
	120	16	20	720	1620	FL121M200J200A ☐
	150	16	20	790	1778	FL151M200J200A ☐
	150	16	25	840	1890	FL151M200J250A ☐
	150	18	25	890	2003	FL151M200K250A ☐
	180	16	25	910	2048	FL181M200J250A ☐
	180	18	20	910	2048	FL181M200K200A ☐
	220	18	25	1050	2363	FL221M200K250A ☐
	220	18	31.5	1160	2610	FL221M200K315A ☐
	270	16	35.5	1250	2813	FL271M200J355A ☐
	330	16	40	1430	3218	FL331M200J400A ☐
	330	18	31.5	1400	3150	FL331M200K315A ☐
	330	18	35.5	1440	3240	FL331M200K355A ☐
	390	18	35.5	1520	3420	FL391M200K355A ☐
	470	18	40	1750	3938	FL471M200K400A ☐
	470	18	45	1820	4095	FL471M200K450A ☐

☐: Enter **blank** for Standard version ☐: Enter **X** for AEC-Q200 version

See "PACKAGING INFORMATION" to taped or formed products.

STANDARD RATINGS

Part number shows bulk version with straight leads

V_R (V)	C_R (µF)	ø D (mm)	L (mm)	I_R ▪ Max. Ripple Current +105°C ▪ 120Hz (mA rms)	I_R ▪ Max. Ripple Current +105°C ▪ 100kHz (mA rms)	CapXon Part Number
220	27	10	16	200	500	FL270M220G160A ☐
	39	10	20	270	675	FL390M220G200A ☐
	68	13	20	480	1200	FL680M220I200A ☐
	150	16	25	850	1913	FL151M220J250A ☐
	220	16	31.5	1110	2498	FL221M220J315A ☐
	270	18	31.5	1260	2835	FL271M220K315A ☐
	330	16	45	1450	3263	FL331M220J450A ☐
	390	18	45	1620	3645	FL391M220K450A ☐
	470	18	50	1840	4140	FL471M220K500A ☐
250	1	6.3	11	26	65	FL010M250E110A ☐
	1.5	6.3	11	28	70	FL1R5M250E110A ☐
	2.2	6.3	11	34	85	FL2R2M250E110A ☐
	3.3	6.3	11	46	115	FL3R3M250E110A ☐
	3.3	8	11.5	60	150	FL3R3M250F115A ☐
	4.7	8	11.5	68	170	FL4R7M250F115A ☐
	5.6	8	11.5	76	190	FL5R6M250F115A ☐
	6.8	8	16	96	240	FL6R8M250F160A ☐
	6.8	10	12.5	96	240	FL6R8M250G125A ☐
	8.2	8	20	120	300	FL8R2M250F200A ☐
	10	8	16	120	300	FL100M250F160A ☐
	10	10	16	130	325	FL100M250G160A ☐
	15	8	20	150	375	FL150M250F200A ☐
	22	10	16	200	500	FL220M250G160A ☐
	22	10	20	220	550	FL220M250G200A ☐
	22	13	20	250	625	FL220M250I200A ☐
	33	10	20	270	675	FL330M250G200A ☐
	33	13	16	270	675	FL330M250I160A ☐
	33	13	20	320	800	FL330M250I200A ☐
	47	13	20	400	1000	FL470M250I200A ☐
	47	13	25	410	1025	FL470M250I250A ☐
	47	16	20	450	1125	FL470M250J200A ☐
	56	13	20	430	1075	FL560M250I200A ☐
	68	13	25	500	1250	FL680M250I250A ☐
	68	16	20	530	1325	FL680M250J200A ☐
	68	16	25	570	1425	FL680M250J250A ☐
	68	18	20	570	1425	FL680M250K200A ☐
	82	13	25	570	1425	FL820M250I250A ☐
	82	16	20	580	1450	FL820M250J200A ☐
	100	16	25	760	1710	FL101M250J250A ☐
	100	16	31.5	800	1800	FL101M250J315A ☐
	100	18	20	720	1620	FL101M250K200A ☐
	100	18	25	780	1755	FL101M250K250A ☐

☐: Enter **blank** for Standard version ☐: Enter **X** for AEC-Q200 version

See "PACKAGING INFORMATION" to taped or formed products.

For further information please contact sales@capxon.org

STANDARD RATINGS

Part number shows bulk version with straight leads

V_R (V)	C_R (µF)	ø D (mm)	L (mm)	I_R ▪ Max. Ripple Current +105°C ▪ 120Hz (mA rms)	I_R ▪ Max. Ripple Current +105°C ▪ 100kHz (mA rms)	CapXon Part Number
250	120	16	25	780	1755	FL121M250J250A ☐☐
	120	18	20	780	1755	FL121M250K200A ☐☐
	150	18	25	890	2003	FL151M250K250A ☐☐
	150	18	31.5	980	2205	FL151M250K315A ☐☐
	180	16	31.5	1020	2295	FL181M250J315A ☐☐
	180	18	25	980	2205	FL181M250K250A ☐☐
	220	16	35.5	1130	2543	FL221M250J355A ☐☐
	220	18	31.5	1130	2543	FL221M250K315A ☐☐
	270	16	40	1290	2903	FL271M250J400A ☐☐
	270	18	35.5	1310	2948	FL271M250K355A ☐☐
	330	18	40	1460	3285	FL331M250K400A ☐☐
350	1	8	11.5	30	75	FL010M350F115A ☐☐
	1.5	8	11.5	32	80	FL1R5M350F115A ☐☐
	2.2	10	12.5	44	110	FL2R2M350G125A ☐☐
	3.3	10	12.5	60	150	FL3R3M350G125A ☐☐
	4.7	10	16	80	200	FL4R7M350G160A ☐☐
	6.8	10	16	100	250	FL6R8M350G160A ☐☐
	10	10	20	130	325	FL100M350G200A ☐☐
	15	10	20	160	400	FL150M350G200A ☐☐
	18	10	20	180	450	FL180M350G200A ☐☐
	22	10	20	200	500	FL220M350G200A ☐☐
	22	13	20	260	650	FL220M350I200A ☐☐
	27	10	25	260	650	FL270M350G250A ☐☐
	33	13	20	330	825	FL330M350I200A ☐☐
	33	13	25	360	900	FL330M350I250A ☐☐
	33	16	20	380	950	FL330M350J200A ☐☐
	47	13	25	430	1075	FL470M350I250A ☐☐
	47	16	20	440	1100	FL470M350J200A ☐☐
	47	18	20	470	1175	FL470M350K200A ☐☐
	56	16	20	480	1200	FL560M350J200A ☐☐
	68	16	25	570	1425	FL680M350J250A ☐☐
	68	16	31.5	620	1550	FL680M350J315A ☐☐
	68	18	20	570	1425	FL680M350K200A ☐☐
	68	18	25	620	1550	FL680M350K250A ☐☐
	82	16	25	620	1550	FL820M350J250A ☐☐
	82	18	25	640	1600	FL820M350K250A ☐☐
	100	16	31.5	800	1800	FL101M350J315A ☐☐
	100	18	25	780	1755	FL101M350K250A ☐☐
	120	16	35.5	860	1935	FL121M350J355A ☐☐
	120	18	31.5	870	1958	FL121M350K315A ☐☐
	150	16	40	1020	2295	FL151M350J400A ☐☐
	150	18	35.5	1020	2295	FL151M350K355A ☐☐
	180	18	40	1080	2430	FL181M350K400A ☐☐

☐: Enter **blank** for Standard version ☐: Enter **X** for AEC-Q200 version

See "PACKAGING INFORMATION" to taped or formed products.

STANDARD RATINGS

Part number shows bulk version with straight leads

V_R (V)	C_R (µF)	ø D (mm)	L (mm)	I_R ▪ Max. Ripple Current +105°C ▪ 120Hz (mA rms)	I_R ▪ Max. Ripple Current +105°C ▪ 100kHz (mA rms)	CapXon Part Number
400	1	8	9	26	65	FL010M400F090A ☐
	1	8	11.5	30	75	FL010M400F115A ☐
	1.5	8	9	30.4	76	FL1R5M400F090A ☐
	1.5	8	11.5	36.4	91	FL1R5M400F115A ☐
	1.5	8	16	40.4	101	FL1R5M400F160A ☐
	2.2	8	11.5	40	100	FL2R2M400F115A ☐
	2.2	8	16	56	140	FL2R2M400F160A ☐
	3.3	8	11.5	52	130	FL3R3M400F115A ☐
	3.3	8	16	60	150	FL3R3M400F160A ☐
	3.3	8	20	61.2	153	FL3R3M400F200A ☐
	3.3	10	12.5	60.4	151	FL3R3M400G125A ☐
	3.3	10	16	72.8	182	FL3R3M400G160A ☐
	3.9	8	16	66	165	FL3R9M400F160A ☐
	4.7	8	11.5	72	180	FL4R7M400F115A ☐
	4.7	8	20	92	230	FL4R7M400F200A ☐
	4.7	10	16	96	240	FL4R7M400G160A ☐
	5.6	8	20	100	250	FL5R6M400F200A ☐
	5.6	10	16	100	250	FL5R6M400G160A ☐
	5.6	10	20	110	275	FL5R6M400G200A ☐
	6.8	8	20	120	300	FL6R8M400F200A ☐
	6.8	10	16	120	300	FL6R8M400G160A ☐
	8.2	10	16	120	300	FL8R2M400G160A ☐
	8.2	10	20	130	325	FL8R2M400G200A ☐
	10	10	16	130	325	FL100M400G160A ☐
	10	10	20	140	350	FL100M400G200A ☐
	15	10	20	180	450	FL150M400G200A ☐
	15	13	20	200	500	FL150M400I200A ☐
	22	13	20	280	700	FL220M400I200A ☐
	22	13	25	310	775	FL220M400I250A ☐
	22	16	20	320	800	FL220M400J200A ☐
	27	13	20	300	750	FL270M400I200A ☐
	33	13	25	330	825	FL330M400I250A ☐
	33	16	20	340	850	FL330M400J200A ☐
	39	13	25	390	975	FL390M400I250A ☐
	47	16	25	480	1200	FL470M400J250A ☐
	47	16	31.5	530	1325	FL470M400J315A ☐
	47	18	20	470	1175	FL470M400K200A ☐
	47	18	25	510	1275	FL470M400K250A ☐
	56	16	25	500	1250	FL560M400J250A ☐
	56	18	20	500	1250	FL560M400K200A ☐
	68	16	25	580	1450	FL680M400J250A ☐
	68	18	25	630	1575	FL680M400K250A ☐
	68	18	31.5	700	1750	FL680M400K315A ☐

☐: Enter **blank** for Standard version ☐: Enter **X** for AEC-Q200 version

See "PACKAGING INFORMATION" to taped or formed products.

For further information please contact sales@capxon.org

STANDARD RATINGS

Part number shows bulk version with straight leads

V_R (V)	C_R (µF)	ø D (mm)	L (mm)	I_R ▪ Max. Ripple Current +105°C ▪ 120Hz (mA rms)	I_R ▪ Max. Ripple Current +105°C ▪ 100kHz (mA rms)	CapXon Part Number
400	82	16	31.5	660	1650	FL820M400J315A ☐
	82	18	25	650	1625	FL820M400K250A ☐
	82	18	31.5	710	1775	FL820M400K315A ☐
	100	16	35.5	760	1710	FL101M400J355A ☐
	100	18	31.5	770	1733	FL101M400K315A ☐
	120	16	40	870	1958	FL121M400J400A ☐
	120	18	35.5	870	1958	FL121M400K355A ☐
	150	18	40	1020	2295	FL151M400K400A ☐
	180	18	45	1100	2475	FL181M400K450A ☐
420	6.8	10	16	120	300	FL6R8M420G160A ☐
	12	10	20	150	375	FL120M420G200A ☐
	15	10	25	190	475	FL150M420G250A ☐
	22	13	20	290	725	FL220M420I200A ☐
	27	13	25	340	850	FL270M420I250A ☐
	33	16	20	390	975	FL330M420J200A ☐
	47	16	25	500	1250	FL470M420J250A ☐
	47	18	20	500	1250	FL470M420K200A ☐
	68	16	31.5	650	1625	FL680M420J315A ☐
	68	18	25	620	1550	FL680M420K250A ☐
	82	16	35.5	730	1825	FL820M420J355A ☐
	82	18	31.5	730	1825	FL820M420K315A ☐
	100	16	40	830	1868	FL101M420J400A ☐
	100	18	35.5	840	1890	FL101M420K355A ☐
	120	18	40	930	2093	FL121M420K400A ☐
	120	18	45	950	2138	FL121M420K450A ☐
	150	18	50	1060	2385	FL151M420K500A ☐
450	1	8	9	26	65	FL010M450F090A ☐
	1	8	11.5	33.2	83	FL010M450F115A ☐
	1.5	8	11.5	36.8	92	FL1R5M450F115A ☐
	1.5	10	9	37.2	93	FL1R5M450G090A ☐
	1.8	8	11.5	38.8	97	FL1R8M450F115A ☐
	1.8	10	9	39.2	98	FL1R8M450G090A ☐
	2.2	8	16	56.4	141	FL2R2M450F160A ☐
	3.3	8	16	61.2	153	FL3R3M450F160A ☐
	4.7	10	16	92	230	FL4R7M450G160A ☐
	5.6	10	16	100	250	FL5R6M450G160A ☐
	6.8	10	16	130	325	FL6R8M450G160A ☐
	6.8	10	20	140	350	FL6R8M450G200A ☐
	8.2	10	20	140	350	FL8R2M450G200A ☐
	10	10	20	140	350	FL100M450G200A ☐
	10	10	25	160	400	FL100M450G250A ☐
	10	13	16	150	375	FL100M450I160A ☐

☐: Enter **blank** for Standard version ☐: Enter **X** for AEC-Q200 version

See "PACKAGING INFORMATION" to taped or formed products.

For further information please contact sales@capxon.org

STANDARD RATINGS

Part number shows bulk version with straight leads

V_R (V)	C_R (µF)	ø D (mm)	L (mm)	I_R ▪ Max. Ripple Current +105°C ▪ 120Hz (mA rms)	I_R ▪ Max. Ripple Current +105°C ▪ 100kHz (mA rms)	CapXon Part Number
450	15	10	25	190	475	FL150M450G250A ☐
	15	13	20	200	500	FL150M450I200A ☐
	18	13	20	260	650	FL180M450I200A ☐
	22	13	25	290	725	FL220M450I250A ☐
	22	16	20	300	750	FL220M450J200A ☐
	22	18	20	320	800	FL220M450K200A ☐
	27	13	25	340	850	FL270M450I250A ☐
	33	16	20	390	975	FL330M450J200A ☐
	33	16	25	420	1050	FL330M450J250A ☐
	33	16	31.5	460	1150	FL330M450J315A ☐
	33	18	20	420	1050	FL330M450K200A ☐
	33	18	25	450	1125	FL330M450K250A ☐
	39	18	20	440	1100	FL390M450K200A ☐
	47	16	25	500	1250	FL470M450J250A ☐
	47	16	31.5	560	1400	FL470M450J315A ☐
	47	18	25	540	1350	FL470M450K250A ☐
	47	18	31.5	590	1475	FL470M450K315A ☐
	56	16	31.5	590	1475	FL560M450J315A ☐
	56	18	25	560	1400	FL560M450K250A ☐
	56	18	31.5	630	1575	FL560M450K315A ☐
	68	16	35.5	660	1650	FL680M450J355A ☐
	68	18	31.5	660	1650	FL680M450K315A ☐
	82	16	40	750	1875	FL820M450J400A ☐
	82	18	31.5	720	1800	FL820M450K315A ☐
	82	18	35.5	750	1875	FL820M450K355A ☐
	100	18	35.5	840	1890	FL101M450K355A ☐
	100	18	40	900	2025	FL101M450K400A ☐
	120	18	45	950	2138	FL121M450K450A ☐
	150	18	50	1070	2408	FL151M450K500A ☐
500	10	13	20	130	325	FL100M500I200A ☐
	12	13	20	140	350	FL120M500I200A ☐
	15	13	25	180	450	FL150M500I250A ☐
	15	16	20	180	450	FL150M500J200A ☐
	22	16	25	230	575	FL220M500J250A ☐
	22	18	20	220	550	FL220M500K200A ☐
	33	16	31.5	290	725	FL330M500J315A ☐
	33	18	25	280	700	FL330M500K250A ☐
	47	18	31.5	360	900	FL470M500K315A ☐
	56	18	35.5	390	975	FL560M500K355A ☐
	68	18	40	420	1050	FL680M500K400A ☐

☐: Enter **blank** for Standard version ☐: Enter **X** for AEC-Q200 version

See "PACKAGING INFORMATION" to taped or formed products.

For further information please contact sales@capxon.org

DIMENSIONS ▪ All dimensions in mm

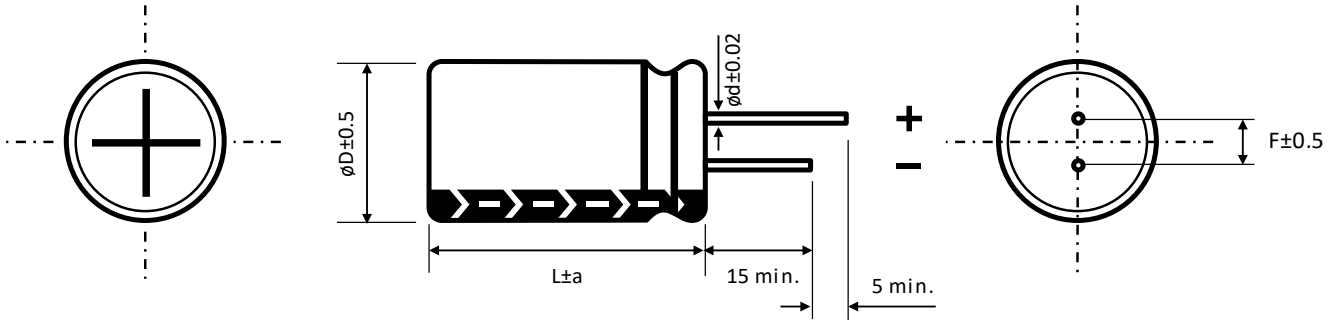

ø D	6.3	8		10	13	16	18
F	2.5	3.5		5	5	7.5	7.5
ø d	0.5	L < 20	L ≥ 20	0.6		0.8	
		0.5	0.6				

a	ø D < 16	ø D = 16		ø D = 18	
	1.5	L = 25 to 35.5	L < 25 and L ≥ 40	L = 25 to 31.5	L < 25 and L ≥ 35.5
		1.5	2	1.5	2

MULTIPLIER K_f for RIPPLE CURRENT vs. FREQUENCY

CAP (µF) / Frequency (Hz)	100/120	1k	10k	100k
1 ~ 82	1	1.75	2.25	2.5
≥ 100	1	1.67	2.05	2.25

PRECAUTIONS, GUIDELINES AND PACKAGING INFORMATON

Unless otherwise agreed in individual specifications, all products are subject to our “General Precautions and Guidelines” as well as our “Packaging Information”. Please refer to the following links in the table.

General Precautions and Guidelines	Packaging Information Liquid Radial
Page 837	Page 336

For further information please contact sales@capxon.org

DISCLAIMER

All product related data (e.g. specification, statements and general information) are subject to change without any notice. It is necessary that the customer observes all product related technical / application information and handling instructions.

CapXon products are designed and manufactured according to severe quality and safety standards. Under no circumstance, CapXon warrants that any CapXon product is suitable for the purposes intended for your application, even CapXon knows the application. It is customer's duty and obligation to check and make sure that CapXon products are suitable for the purposes intended and select the correct and proper CapXon product. Customers are requested to perform a sufficient validation and reliability evaluation to assure needed safety level and reliability performance by suitable designs and to apply proper safeguards (e.g. redundancies, protective circuits).

Particular operating conditions (ambient temperature, ripple current, voltage, thermal resistance, etc.) as well as storage, production or assembly may affect the performance and the lifetime of the capacitor. Please consult CapXon for lifetime estimation, failure mode considerations or worst-case scenarios according to the product technology, product tolerances / deviations or change of the characteristics of the capacitor due to shipment, storage, handling, production and usage.

For aerospace or military application, life-saving, life-sustaining, safety critical applications or any application where failure may cause severe personal injury or death, please consult us before design-in the capacitor in your application.

Except for the written expressed warranties, CapXon does not impliedly, by assumption or whatever else, warrant, undertake, promise any other warranty or guaranty for any CapXon product.

For further information, please visit our website www.capxongroup.com or contact CapXon directly.

HY SERIES ▪ LONG LIFE, SLIM SIZE 105°C TYPE



KEY FEATURES

SLIM TYPE LONG LIFE

- **ALUMINUM ELECTROLYTIC CAPACITOR** ▪ THT type
- Endurance: 105°C ▪ 10000 hours
- Slim design for height limited applications
- High reliability
- High voltage version

SPECIFICATIONS

Items		Performance Characteristics					
Operating Temperature Range		-25 ~ +105°C					
Rated Voltage Range	V_R	250 ~ 450V DC					
Surge Voltage	V_S	($V_R \le 315V$): $V_S = 1.15 \cdot V_R$ ($V_R > 315V$): $V_S = 1.10 \cdot V_R$					
Capacitance Range	C_R	12 ~ 120µF					
Cap. Tolerance	ΔC	±20% (120Hz ▪ 20°C)					
Leakage Current (20°C ▪ V_R applied)	I_{LEAK}	≤ √3·C_R·V_R ▪ After 5 minutes [I_{LEAK} (µA) ; C_R (µF) ; V_R (V)]					
Dissipation Factor % (20°C ▪ 120Hz)	tanδ	V_R (V DC)	250	350	400	420	450
		tanδ (%)	20	20	20	25	25
Low Temperature Characteristics at 120Hz	Z ratio max.	V_R (V DC)	250	350	400	420	450
		Z-25°C/Z+20°C	3	8	8	8	8

Lifetime Test		
Endurance 105°C (V_R & I_R applied)	Test	**10000 hours**
	△C/C_R	≤ ±20% of initial measured value
	tanδ	≤ 200% of initial specified value
	I_{Leak}	≤ the initial specified value
Shelf Life 105°C (V_R = 0)	Test	**1000 hours**
	△C/C_R	≤ ±20% of initial measured value
	tanδ	≤ 200% of initial specified value
	I_{Leak}	≤ the initial specified value
	Before measurement: Restore capacitor to 20°C, apply V_R for 30 min according JIS-C-5101-4	

MULTIPLIER K_f for RIPPLE CURRENT vs. FREQUENCY

V_R (V) / Frequency (Hz)	50/60	100/120	400	1k	100k
250 ~ 350	0.8	1	1.2	1.3	1.4
400 ~ 450	0.8	1	1.25	1.4	1.5

For further information please contact sales@capxon.org

STANDARD RATINGS

Part number shows bulk version with straight leads

V_R (V)	C_R (µF)	ø D (mm)	L (mm)	I_R ▪ Max. Ripple Current +105°C ▪ 120Hz (mA rms)	CapXon Part Number
250	22	8	35	140	HY220M250F350A
	27	8	40	165	HY270M250F400A
	27	10	30	165	HY270M250G300A
	33	10	30	180	HY330M250G300A
	39	10	35	210	HY390M250G350A
	47	10	40	280	HY470M250G400A
	47	13	30	260	HY470M250I300A
	56	10	45	330	HY560M250G450A
	56	13	35	330	HY560M250I350A
	68	10	50	380	HY680M250G500A
	68	13	35	370	HY680M250I350A
	82	10	60	490	HY820M250G600A
	82	13	40	465	HY820M250I400A
	100	13	45	500	HY101M250I450A
	120	13	50	580	HY121M250I500A
350	12	8	30	100	HY120M350F300A
	15	8	35	130	HY150M350F350A
	22	8	40	165	HY220M350F400A
	27	10	30	185	HY270M350G300A
	33	10	35	200	HY330M350G350A
	39	10	40	285	HY390M350G400A
	39	13	30	285	HY390M350I300A
	47	13	35	360	HY460M350I350A
	47	10	45	340	HY470M350G450A
	47	13	30	330	HY470M350I300A
	56	10	50	380	HY560M350G500A
	68	10	60	450	HY680M350G600A
	68	13	40	430	HY680M350I400A
	82	13	45	520	HY820M350I450A
	100	13	50	580	HY101M350I500A
400	12	8	30	130	HY120M400F300A
	15	8	35	180	HY150M400F350A
	22	8	45	230	HY220M400F450A
	27	10	30	240	HY270M400G300A
	33	10	35	290	HY330M400G350A
	39	10	40	400	HY390M400G400A
	39	13	30	400	HY390M400I300A
	47	10	45	450	HY470M400G450A
	47	13	30	440	HY470M400I300A
	56	10	50	520	HY560M400G500A
	56	13	35	500	HY560M400I350A
	68	13	40	580	HY680M400I400A
	82	13	45	650	HY820M400I450A
	100	13	50	680	HY101M400I500A

See "PACKAGING INFORMATION" to taped or formed products.

For further information please contact sales@capxon.org

STANDARD RATINGS

Part number shows bulk version with straight leads

V_R (V)	C_R (µF)	ø D (mm)	L (mm)	I_R ▪ Max. Ripple Current +105°C ▪ 120Hz (mA rms)	CapXon Part Number
420	12	8	30	140	HY120M420F300A
	15	8	35	170	HY150M420F350A
	22	8	50	250	HY220M420F500A
	27	10	35	270	HY270M420G350A
	33	10	40	370	HY330M420G400A
	39	10	45	410	HY390M420G450A
	39	13	30	390	HY390M420I300A
	47	10	50	420	HY470M420G500A
	47	13	35	450	HY470M420I350A
	56	10	60	530	HY560M420G600A
	56	13	40	520	HY560M420I400A
	68	13	45	580	HY680M420I450A
	82	13	50	660	HY820M420I500A
450	12	8	30	150	HY120M450F300A
	15	8	40	190	HY150M450F400A
	22	10	30	220	HY220M450G300A
	27	10	40	280	HY270M450G400A
	33	10	40	360	HY330M450G400A
	33	13	30	370	HY330M450I300A
	39	10	50	410	HY390M450G500A
	39	13	35	420	HY390M450I350A
	47	10	50	420	HY470M450G500A
	47	13	40	480	HY470M450I400A
	56	13	45	530	HY560M450I450A
	68	13	50	620	HY680M450I500A
	82	13	55	680	HY820M450I550A

See "PACKAGING INFORMATION" to taped or formed products.

DIMENSIONS ▪ All dimensions in mm

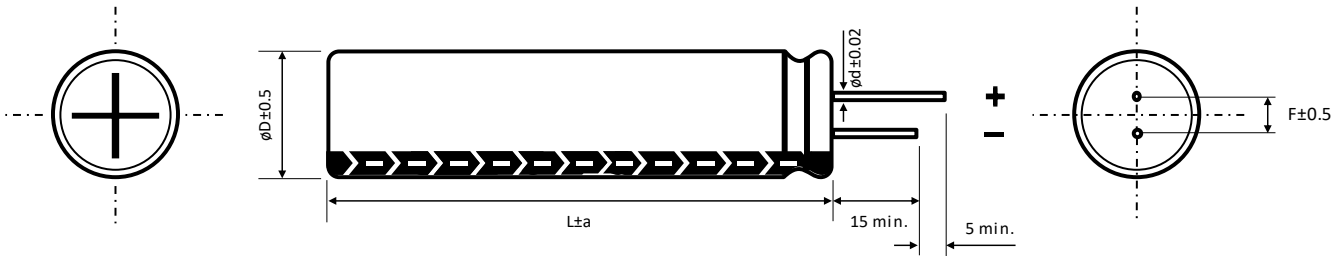

ø D	8	10	13
F	3.5	5	5
ø d	0.5	0.6	0.6
a	1.5	2	2

For further information please contact sales@capxon.org

PRECAUTIONS, GUIDELINES AND PACKAGING INFORMATON

Unless otherwise agreed in individual specifications, all products are subject to our “General Precautions and Guidelines” as well as our “Packaging Information”. Please refer to the following links in the table.

	
General Precautions and Guidelines	Packaging Information Liquid Radial
Page 837	Page 336

DISCLAIMER

All product related data (e.g. specification, statements and general information) are subject to change without any notice. It is necessary that the customer observes all product related technical / application information and handling instructions.

CapXon products are designed and manufactured according to severe quality and safety standards. Under no circumstance, CapXon warrants that any CapXon product is suitable for the purposes intended for your application, even CapXon knows the application. It is customer's duty and obligation to check and make sure that CapXon products are suitable for the purposes intended and select the correct and proper CapXon product. Customers are requested to perform a sufficient validation and reliability evaluation to assure needed safety level and reliability performance by suitable designs and to apply proper safeguards (e.g. redundancies, protective circuits).

Particular operating conditions (ambient temperature, ripple current, voltage, thermal resistance, etc.) as well as storage, production or assembly may affect the performance and the lifetime of the capacitor. Please consult CapXon for lifetime estimation, failure mode considerations or worst-case scenarios according to the product technology, product tolerances / deviations or change of the characteristics of the capacitor due to shipment, storage, handling, production and usage.

For aerospace or military application, life-saving, life-sustaining, safety critical applications or any application where failure may cause severe personal injury or death, please consult us before design-in the capacitor in your application.

Except for the written expressed warranties, CapXon does not impliedly, by assumption or whatever else, warrant, undertake, promise any other warranty or guaranty for any CapXon product.

For further information, please visit our website www.capxongroup.com or contact CapXon directly.

GT SERIES ▪ MINIATURIZED, AUTOMOTIVE 105°C TYPE



KEY FEATURES

AEC-Q 200 · MINIATURIZED · LONG LIFE

- **ALUMINUM ELECTROLYTIC CAPACITOR** ▪ THT type
- Endurance: 105°C ▪ 10000 hours
- Miniaturized for space critical applications
- High reliability
- AEC-Q200 version available

HF Halogen Free · RoHS & REACH COMPLIANT

SPECIFICATIONS

Items		Performance Characteristics							
Operating Temperature Range		-40 ~ +105°C							
Rated Voltage Range	V_R	10 ~ 100V DC							
Surge Voltage	V_S	$V_S = 1.15 \cdot V_R$							
Capacitance Range	C_R	1 ~ 330µF							
Cap. Tolerance	ΔC	±20% (120Hz ▪ 20°C)							
Leakage Current (20°C ▪ V_R applied)	I_{LEAK}	≤ $0.01 \cdot C_R \cdot V_R$ or 3µA, whichever is greater ▪ After 2 minutes [I_{LEAK} (µA) ; C_R (µF) ; V_R (V)]							
Dissipation Factor % (20°C ▪ 120Hz)	tanδ	V_R (V DC)	10	16	25	35	50	63	100
		tanδ (%)	45	35	30	22	19	17	15
Low Temperature Characteristics at 120Hz	Z ratio max.	V_R (V DC)	10	16	25	35	50	63	100
		Z-25°C/Z+20°C	10	8	6	6	5	5	5
		Z-40°C/Z+20°C	14	10	8	8	8	8	6

Lifetime Test		
Endurance 105°C (V_R & I_R applied)	Test	**10000 hours**
	$\triangle C/C_R$	≤ ±25% of initial measured value
	tanδ	≤ 300% of initial specified value
	I_{Leak}	≤ the initial specified value
Shelf Life 105°C (V_R = 0)	Test	**1000 hours**
	$\triangle C/C_R$	≤ ±25% of initial measured value
	tanδ	≤ 300% of initial specified value
	I_{Leak}	≤ the initial specified value
	Before measurement: Restore capacitor to 20°C, apply V_R for 30 min according JIS-C-5101-4	

For further information please contact sales@capxon.org

STANDARD RATINGS

Part number shows bulk version with straight leads

V_R (V)	C_R (µF)	ø D (mm)	L (mm)	I_R ▪ Max. Ripple Current +105°C ▪ 100kHz (mA rms)	CapXon Part Number
10	100	5	11	140	GT101M010C110A ☐
	220	6.3	11	220	GT221M010E110A ☐
	330	8	11.5	340	GT331M010F115A ☐
16	47	5	11	140	GT470M016C110A ☐
	100	6.3	11	220	GT101M016E110A ☐
	220	8	11.5	340	GT221M016F115A ☐
25	33	5	11	140	GT330M025C110A ☐
	47	5	11	140	GT470M025C110A ☐
	100	6.3	11	220	GT101M025E110A ☐
35	33	5	11	90	GT330M035C110A ☐
	47	6.3	11	220	GT470M035E110A ☐
	100	8	11.5	340	GT101M035F115A ☐
50	1	5	11	26	GT010M050C110A ☐
	2.2	5	11	36	GT2R2M050C110A ☐
	3.3	5	11	75	GT3R3M050C110A ☐
	4.7	5	11	85	GT4R7M050C110A ☐
	10	5	11	95	GT100M050C110A ☐
	22	5	11	140	GT220M050C110A ☐
	33	6.3	11	200	GT330M050E110A ☐
	47	6.3	11	200	GT470M050E110A ☐
	100	8	11.5	280	GT101M050F115A ☐
63	10	5	11	85	GT100M063C110A ☐
	22	6.3	11	180	GT220M063E110A ☐
	33	6.3	11	180	GT330M063E110A ☐
	47	8	11.5	250	GT470M063F115A ☐
100	1	5	11	40	GT010M100C110A ☐
	2.2	5	11	50	GT2R2M100C110A ☐
	3.3	5	11	60	GT3R3M100C110A ☐
	4.7	5	11	70	GT4R7M100C110A ☐
	10	6.3	11	150	GT100M100E110A ☐
	22	8	11.5	230	GT220M100F115A ☐

☐: Enter **blank** for Standard version ☐: Enter **X** for AEC-Q200 version

See "PACKAGING INFORMATION" to taped or formed products.

MULTIPLIER K_f for RIPPLE CURRENT vs. FREQUENCY

C_R (µF) / Frequency (Hz)	100/120	1k	10k	100k
1 ~ 10	0.42	0.6	0.8	1
22 ~ 33	0.55	0.75	0.9	1
47 ~ 330	0.7	0.85	0.95	1

For further information please contact sales@capxon.org

DIMENSIONS ▪ All dimensions in mm

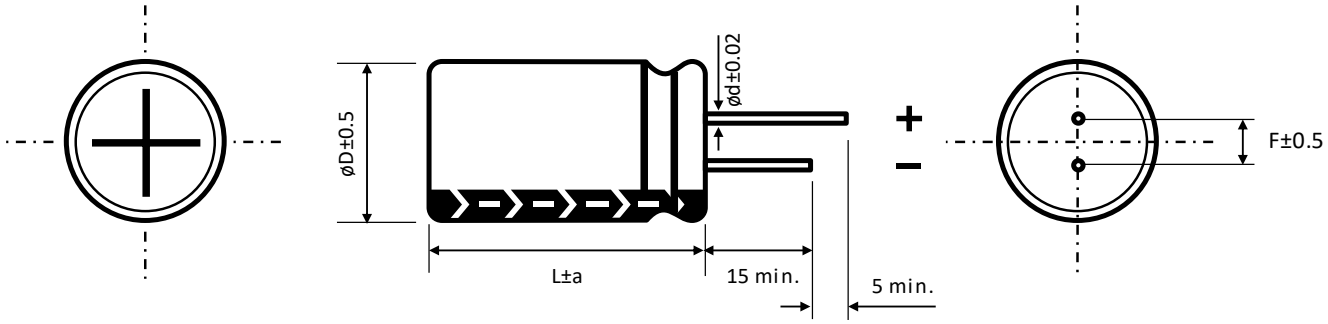

ø D	5	6.3	8
F	2	2.5	3.5
ø d	0.5	0.5	0.5
a	1.5	1.5	1.5

PRECAUTIONS, GUIDELINES AND PACKAGING INFORMATON

Unless otherwise agreed in individual specifications, all products are subject to our “General Precautions and Guidelines” as well as our “Packaging Information”. Please refer to the following links in the table.

General Precautions and Guidelines	Packaging Information Liquid Radial
Page 837	Page 336

DISCLAIMER

All product related data (e.g. specification, statements and general information) are subject to change without any notice. It is necessary that the customer observes all product related technical / application information and handling instructions.

CapXon products are designed and manufactured according to severe quality and safety standards. Under no circumstance, CapXon warrants that any CapXon product is suitable for the purposes intended for your application, even CapXon knows the application. It is customer's duty and obligation to check and make sure that CapXon products are suitable for the purposes intended and select the correct and proper CapXon product. Customers are requested to perform a sufficient validation and reliability evaluation to assure needed safety level and reliability performance by suitable designs and to apply proper safeguards (e.g. redundancies, protective circuits).

Particular operating conditions (ambient temperature, ripple current, voltage, thermal resistance, etc.) as well as storage, production or assembly may affect the performance and the lifetime of the capacitor. Please consult CapXon for lifetime estimation, failure mode considerations or worst-case scenarios according to the product technology, product tolerances / deviations or change of the characteristics of the capacitor due to shipment, storage, handling, production and usage.

For aerospace or military application, life-saving, life-sustaining, safety critical applications or any application where failure may cause severe personal injury or death, please consult us before design-in the capacitor in your application.

Except for the written expressed warranties, CapXon does not impliedly, by assumption or whatever else, warrant, undertake, promise any other warranty or guaranty for any CapXon product.

For further information, please visit our website www.capxongroup.com or contact CapXon directly.

LE SERIES ▪ ULTRA LONG LIFE 105°C TYPE



KEY FEATURES

LONG LIFE HIGH VOLTAGE

- **ALUMINUM ELECTROLYTIC CAPACITOR** ▪ THT type
- Endurance: 105°C ▪ 12 000 hours up to 20 000 hours
- High voltage up to 450V
- High reliability
- Ideal for applications with very long-life expectancies

HF Halogen Free RoHS & REACH COMPLIANT

SPECIFICATIONS

Items		Performance Characteristics					
Operating Temperature Range		-40 ~ +105°C					
Rated Voltage Range	V_R	160 ~ 450V DC					
Surge Voltage	V_S	($V_R \le 315V$): $V_S = 1.15 \cdot V_R$ ($V_R > 315V$): $V_S = 1.10 \cdot V_R$					
Capacitance Range	C_R	1 ~ 68µF					
Cap. Tolerance	ΔC	±20% (120Hz ▪ 20°C)					
Leakage Current (20°C ▪ V_R applied)	I_{LEAK}	≤ $0.1 \cdot C_R \cdot V_R$ + 40µA ▪ After 1 minute [I_{LEAK} (µA) ; C_R (µF) ; V_R (V)]					
Dissipation Factor % (20°C ▪ 120Hz)	tanδ	V_R (V DC)	160	200	250	400	450
		tanδ (%)	24	24	24	24	24
Low Temperature Characteristics at 120Hz	Z ratio max.	V_R (V DC)	160	200	250	400	450
		Z-25°C/Z+20°C	3	3	6	6	8
		Z-40°C/Z+20°C	8	8	10	10	12

Lifetime Test			
Endurance 105°C (V_R & I_R applied)	Test	**12 000 hours**	ø D 6.3 x L 11 mm
		12 000 hours	ø D 8 x L 9 mm
		12 000 hours	ø D 10 x L 9 mm
		15 000 hours	ø D 8 x L 11.5 mm
		15 000 hours	ø D 10 x L 12.5 mm
		20 000 hours	ø D ≥ 10 x L 16 mm
	△C/C_R	≤ ±30% of initial measured value	
	tanδ	≤ 300% of initial specified value	
	I_{Leak}	≤ the initial specified value	
Shelf Life 105°C (V_R = 0)	Test	**1 000 hours**	
	△C/C_R	≤ ±30% of initial measured value	
	tanδ	≤ 300% of initial specified value	
	I_{Leak}	≤ the initial specified value	
	Before measurement: Restore capacitor to 20°C, apply V_R for 30 min according JIS-C-5101-4		

For further information please contact sales@capxon.org

STANDARD RATINGS

Part number shows bulk version with straight leads

V_R (V)	C_R (µF)	ø D (mm)	L (mm)	I_R ▪ Max. Ripple Current +105°C ▪ 120Hz (mA rms)	CapXon Part Number
160	5.6	6.3	11	53	LE5R6M160E110A
	10	8	9	71	LE100M160F090A
	15	8	11.5	93	LE150M160F115A
	15	10	9	96	LE150M160G090A
	22	10	12.5	122	LE220M160G125A
	33	10	16	159	LE330M160G160A
200	2.2	6.3	11	37	LE2R2M200E110A
	3.3	6.3	11	43	LE3R3M200E110A
	4.7	6.3	11	50	LE4R7M200E110A
	5.6	8	9	57	LE5R6M200F090A
	6.8	8	9	63	LE6R8M200F090A
	8.2	8	9	67	LE8R2M200F090A
	10	8	11.5	81	LE100M200F115A
	12	10	9	89	LE120M200G090A
	18	10	12.5	114	LE180M200G125A
	27	10	16	150	LE270M200G160A
250	1.8	6.3	11	34	LE1R8M250E110A
	2.2	6.3	11	37	LE2R2M250E110A
	3.3	6.3	11	43	LE3R3M250E110A
	4.7	8	9	54	LE4R7M250F090A
	5.6	8	11.5	63	LE5R6M250F115A
	6.8	8	11.5	69	LE6R8M250F115A
	8.2	10	9	77	LE8R2M250G090A
	10	10	12.5	91	LE100M250G125A
	12	10	12.5	98	LE120M250G125A
	18	10	16	128	LE180M250G160A
400	1	6.3	11	25	LE010M400E110A
	1.2	8	9	29	LE1R2M400F090A
	1.5	8	9	31	LE1R5M400F090A
	1.8	8	9	34	LE1R8M400F090A
	2.2	8	9	37	LE2R2M400F090A
	2.2	8	11.5	41	LE2R2M400F115A
	2.7	8	11.5	44	LE2R7M400F115A
	3.3	8	11.5	48	LE3R3M400F115A
	3.3	10	9	49	LE3R3M400G090A
	3.9	10	12.5	58	LE3R9M400G125A
	4.7	10	12.5	62	LE4R7M400G125A
	6.8	10	16	86	LE6R8M400G160A

See "PACKAGING INFORMATION" to taped or formed products.

STANDARD RATINGS

Part number shows bulk version with straight leads

V_R (V)	C_R (µF)	ø D (mm)	L (mm)	I_R ▪ Max. Ripple Current +105°C ▪ 120Hz (mA rms)	CapXon Part Number
450	4.7	10	16	55	LE4R7M450G160A
	4.7	10	20	67	LE4R7M450G200A
	6.8	10	20	85	LE6R8M450G200A
	8.2	10	20	85	LE8R2M450G200A
	10	13	20	136	LE100M450I200A
	15	13	25	181	LE150M450I250A
	22	13	25	241	LE220M450I250A
	22	16	20	293	LE220M450J200A
	33	16	25	321	LE330M450J250A
	33	18	20	313	LE330M450K200A
	47	18	25	481	LE470M450K250A
	68	18	31.5	521	LE680M450K315A

See "PACKAGING INFORMATION" to taped or formed products.

DIMENSIONS ▪ All dimensions in mm

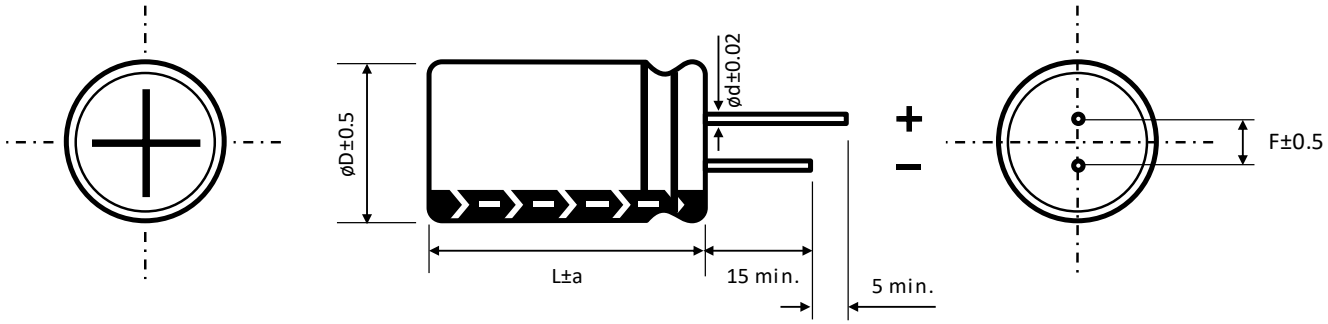

ø D	6.3	8		10	13	16	18
F	2.5	3.5		5	5	7.5	7.5
ø d	0.5	L < 20	L ≥ 20	0.6		0.8	
		0.5	0.6				

a	ø D < 16	ø D = 16		ø D = 18	
	1.5	L = 25 to 35.5	L < 25 and L ≥ 40	L = 25 to 31.5	L < 25 and L ≥ 35.5
		1.5	2	1.5	2

For further information please contact sales@capxon.org

MULTIPLIER for RIPPLE CURRENT vs. FREQUENCY

160 ~ 400V

C_R (µF) / Frequency (Hz)	100/120	1k	10k	100k
1 ~ 5.6	1	1.6	1.8	2
6.8 ~ 18	1	1.5	1.7	1.9
22 ~ 33	1	1.4	1.6	1.8

≥ 450V

C_R (µF) / Frequency (Hz)	100/120	1k	10k	100k
4.7 ~ 15	0.3	0.6	0.9	1
22 ~ 68	0.4	0.7	0.9	1

PRECAUTIONS, GUIDELINES AND PACKAGING INFORMATON

Unless otherwise agreed in individual specifications, all products are subject to our “General Precautions and Guidelines” as well as our “Packaging Information”. Please refer to the following links in the table.

General Precautions and Guidelines	Packaging Information Liquid Radial
Page 837	Page 336

DISCLAIMER

All product related data (e.g. specification, statements and general information) are subject to change without any notice. It is necessary that the customer observes all product related technical / application information and handling instructions.

CapXon products are designed and manufactured according to severe quality and safety standards. Under no circumstance, CapXon warrants that any CapXon product is suitable for the purposes intended for your application, even CapXon knows the application. It is customer's duty and obligation to check and make sure that CapXon products are suitable for the purposes intended and select the correct and proper CapXon product. Customers are requested to perform a sufficient validation and reliability evaluation to assure needed safety level and reliability performance by suitable designs and to apply proper safeguards (e.g. redundancies, protective circuits).

Particular operating conditions (ambient temperature, ripple current, voltage, thermal resistance, etc.) as well as storage, production or assembly may affect the performance and the lifetime of the capacitor. Please consult CapXon for lifetime estimation, failure mode considerations or worst-case scenarios according to the product technology, product tolerances / deviations or change of the characteristics of the capacitor due to shipment, storage, handling, production and usage.

For aerospace or military application, life-saving, life-sustaining, safety critical applications or any application where failure may cause severe personal injury or death, please consult us before design-in the capacitor in your application.

Except for the written expressed warranties, CapXon does not impliedly, by assumption or whatever else, warrant, undertake, promise any other warranty or guaranty for any CapXon product.

For further information, please visit our website www.capxongroup.com or contact CapXon directly.

TH SERIES ▪ HIGH TEMP., AUTOMOTIVE 125°C TYPE

KEY FEATURES

AEC-Q 200 · HIGH VOLTAGE · HIGH TEMPERATURE

- **ALUMINUM ELECTROLYTIC CAPACITOR** ▪ THT type
- Endurance: 125°C ▪ 1000 hours up to 3000 hours
- Especially for applications with high ambient temperatures
- High reliability
- AEC-Q200 version available



HF Halogen Free · RoHS & REACH COMPLIANT

SPECIFICATIONS

Items		Performance Characteristics		
Operating Temperature Range		-40 ~ +125°C		-25 ~ +125°C
Rated Voltage Range	V_R	10 ~ 400V DC		450V DC
Surge Voltage	V_S	($V_R \le 315V$): $V_S = 1.15 \cdot V_R$		($V_R > 315V$): $V_S = 1.10 \cdot V_R$
Capacitance Range	C_R	0.47 ~ 8200µF		1 ~ 47µF
Cap. Tolerance	ΔC	±20% (120Hz ▪ 20°C)		
Leakage Current (20°C ▪ V_R applied)	I_{LEAK}	10 ~ 100V		≤ $0.01C_R \cdot V_R$ or 3µA (After 2 minutes)
		160 ~ 450V	$C_R \cdot V_R \le 1000$	≤ $0.1C_R \cdot V_R$ + 40µA (After 1 minute)
			$C_R \cdot V_R > 1000$	≤ $0.04C_R \cdot V_R$ + 100µA (After 1 minute)
		[I_{LEAK} (µA) ; C_R (µF) ; V_R (V)]		

Dissipation Factor % (20°C ▪ 120Hz)	tanδ							
		V_R (V DC)	10	16	25	35	50	63	80
		tanδ (%)	18	15	13	12	10	8	8
		V_R (V DC)	100	160	200	250	350	400	450
		tanδ (%)	7	12	12	12	15	15	20
		For $C_R \ge 1000µF$, add 2% per every multiple 1000µF of rated capacitance value							

Low Temperature Characteristics at 120Hz	Z ratio max.					
		V_R (V DC)	10	16 ~ 100	160 ~ 250	350 ~ 400	450
		Z-25°C/Z+20°C	3	2	3	6	6
		Z-40°C/Z+20°C	4	4	6	12	-
		For capacitance > 1000µF					
		Z-25°C/Z+20°C	Add 0.5 for every multiple 1000µF of rated capacitance value				
		Z-40°C/Z+20°C	Add 1 for every multiple 1000µF of rated capacitance value				

Lifetime Test			
Endurance 125°C (V_R & I_R applied)	Test	**1000 hours**	ø D < 8 mm
		2000 hours	ø D = 8 ~ 10 mm
		3000 hours	ø D ≥ 13 mm
	△C/C_R	≤ ±20% of initial measured value	
	tanδ	≤ 300% of initial specified value	
	I_{Leak}	≤ the initial specified value	
Shelf Life 125°C (V_R = 0)	Test	**1000 hours**	
	△C/C_R	≤ ±20% of initial measured value	
	tanδ	≤ 300% of initial specified value	
	I_{Leak}	≤ the initial specified value	
	Before measurement: Restore capacitor to 20°C, apply V_R for 30 min according JIS-C-5101-4		

For further information please contact sales@capxon.org

STANDARD RATINGS

Part number shows bulk version with straight leads

V_R (V)	C_R (µF)	ø D (mm)	L (mm)	I_R ▪ Max. Ripple Current +125°C ▪ 120Hz (mA rms)	CapXon Part Number
10	47	5	11	92	TH470M010C110A ☐
	56	5	11	100	TH560M010C110A ☐
	100	5	11	130	TH101M010C110A ☐
	100	6.3	11	145	TH101M010E110A ☐
	120	6.3	11	160	TH121M010E110A ☐
	330	8	11.5	350	TH331M010F115A ☐
	330	10	12.5	410	TH331M010G125A ☐
	470	8	11.5	430	TH471M010F115A ☐
	470	8	16	500	TH471M010F160A ☐
	470	10	12.5	505	TH471M010G125A ☐
	470	10	16	525	TH471M010G160A ☐
	560	10	12.5	530	TH561M010G125A ☐
	680	8	20	640	TH681M010F200A ☐
	680	10	16	660	TH681M010G160A ☐
	1000	10	16	870	TH102M010G160A ☐
	1000	10	20	960	TH102M010G200A ☐
	1200	10	20	1000	TH122M010G200A ☐
	1500	10	20	1120	TH152M010G200A ☐
16	22	5	11	66	TH220M016C110A ☐
	33	6.3	11	91	TH330M016E110A ☐
	47	5	11	97	TH470M016C110A ☐
	47	6.3	11	110	TH470M016E110A ☐
	100	6.3	11	175	TH101M016E110A ☐
	100	8	11.5	206	TH101M016F115A ☐
	220	8	11.5	340	TH221M016F115A ☐
	220	10	12.5	400	TH221M016G125A ☐
	330	8	11.5	400	TH331M016F115A ☐
	330	8	16	460	TH331M016F160A ☐
	330	10	12.5	470	TH331M016G125A ☐
	330	10	16	525	TH331M016G160A ☐
	470	8	11.5	500	TH471M016F115A ☐
	470	8	20	640	TH471M016F200A ☐
	470	10	12.5	590	TH471M016G125A ☐
	470	10	16	650	TH471M016G160A ☐
	470	10	20	720	TH471M016G200A ☐
	680	10	20	760	TH681M016G200A ☐
	820	10	16	740	TH821M016G160A ☐
	820	10	25	900	TH821M016G250A ☐
	1000	10	20	860	TH102M016G200A ☐
	1000	10	25	950	TH102M016G250A ☐
	1000	13	20	1000	TH102M016I200A ☐

☐: Enter **blank** for Standard version ☐: Enter **X** for AEC-Q200 version

See "PACKAGING INFORMATION" to taped or formed products.

STANDARD RATINGS

Part number shows bulk version with straight leads

V_R (V)	C_R (µF)	ø D (mm)	L (mm)	I_R ▪ Max. Ripple Current +125°C ▪ 120Hz (mA rms)	CapXon Part Number
25	22	6.3	11	70	TH220M025E110A ☐
	33	5	11	88	TH330M025C110A ☐
	33	6.3	11	100	TH330M025E110A ☐
	47	5	11	97	TH470M025C110A ☐
	47	6.3	11	110	TH470M025E110A ☐
	47	8	11.5	130	TH470M025F115A ☐
	56	6.3	11	120	TH560M025E110A ☐
	100	8	11.5	210	TH101M025F115A ☐
	100	10	12.5	250	TH101M025G125A ☐
	120	8	11.5	220	TH121M025F115A ☐
	150	8	11.5	260	TH151M025F115A ☐
	180	8	11.5	290	TH181M025F115A ☐
	220	8	11.5	360	TH221M025F115A ☐
	220	8	16	415	TH221M025F160A ☐
	220	10	12.5	420	TH221M025G125A ☐
	220	10	16	470	TH221M025G160A ☐
	270	8	20	470	TH271M025F200A ☐
	270	10	12.5	435	TH271M025G125A ☐
	330	8	16	510	TH331M025F160A ☐
	330	10	12.5	520	TH331M025G125A ☐
	330	10	16	570	TH331M025G160A ☐
	330	10	20	631	TH331M025G200A ☐
	390	10	16	650	TH391M025G160A ☐
	470	8	20	620	TH471M025F200A ☐
	470	10	16	640	TH471M025G160A ☐
	470	10	20	700	TH471M025G200A ☐
	470	10	25	770	TH471M025G250A ☐
	470	13	20	810	TH471M025I200A ☐
	560	10	20	680	TH561M025G200A ☐
	560	10	25	750	TH561M025G250A ☐
	680	10	20	740	TH681M025G200A ☐
	1000	13	20	880	TH102M025I200A ☐
	1000	13	25	970	TH102M025I250A ☐
	1000	16	25	1100	TH102M025J250A ☐
	1200	10	20	1010	TH122M025G200A ☐
	1500	10	25	1220	TH152M025G250A ☐
	1800	13	20	1350	TH182M025I200A ☐
	2700	13	25	1710	TH272M025I250A ☐
	3300	13	30	2070	TH332M025I300A ☐
	5600	18	25	2730	TH562M025K250A ☐
	6800	16	35.5	3300	TH682M025J355A ☐
	8200	16	40	3750	TH822M025J400A ☐

☐: Enter **blank** for Standard version ☐: Enter **X** for AEC-Q200 version

See "PACKAGING INFORMATION" to taped or formed products.

For further information please contact sales@capxon.org

STANDARD RATINGS

Part number shows bulk version with straight leads

V_R (V)	C_R (µF)	ø D (mm)	L (mm)	I_R ▪ Max. Ripple Current +125°C ▪ 120Hz (mA rms)	CapXon Part Number
35	22	5	11	72	TH220M035C110A ☐
	22	6.3	11	82	TH220M035E110A ☐
	33	8	11.5	108	TH330M035F115A ☐
	47	6.3	11	110	TH470M035E110A ☐
	47	8	11.5	130	TH470M035F115A ☐
	47	10	12.5	158	TH470M035G125A ☐
	56	6.3	11	130	TH560M035E110A ☐
	100	8	11.5	200	TH101M035F115A ☐
	100	10	12.5	230	TH101M035G125A ☐
	100	10	16	262	TH101M035G160A ☐
	120	8	11.5	300	TH121M035F115A ☐
	120	8	16	350	TH121M035F160A ☐
	150	10	12.5	360	TH151M035G125A ☐
	180	8	20	410	TH181M035F200A ☐
	180	10	12.5	380	TH181M035G125A ☐
	220	10	12.5	440	TH221M035G125A ☐
	220	10	16	490	TH221M035G160A ☐
	220	10	20	540	TH221M035G200A ☐
	270	10	16	500	TH271M035G160A ☐
	270	10	20	550	TH271M035G200A ☐
	330	10	16	560	TH331M035G160A ☐
	330	10	25	680	TH331M035G250A ☐
	330	13	20	718	TH331M035I200A ☐
	390	10	20	590	TH391M035G200A ☐
	470	10	20	700	TH471M035G200A ☐
	470	13	20	810	TH471M035I200A ☐
	470	13	25	900	TH471M035I250A ☐
	560	10	20	580	TH561M035G200A ☐
	560	13	16	610	TH561M035I160A ☐
	680	10	20	800	TH681M035G200A ☐
	820	10	25	980	TH821M035G250A ☐
	1000	13	25	1140	TH102M035I250A ☐
	1000	16	25	1280	TH102M035J250A ☐
	1200	10	30	1290	TH122M035G300A ☐
	1500	13	25	1368	TH152M035I250A ☐
	2200	13	30	1660	TH222M035I300A ☐
	2700	13	40	2350	TH272M035I400A ☐
	3300	16	31.5	2480	TH332M035J315A ☐
	3300	18	25	2400	TH332M035K250A ☐
	4700	16	40	3000	TH472M035J400A ☐

☐: Enter **blank** for Standard version ☐: Enter **X** for AEC-Q200 version

See "PACKAGING INFORMATION" to taped or formed products.

For further information please contact sales@capxon.org

STANDARD RATINGS

Part number shows bulk version with straight leads

V_R (V)	C_R (µF)	ø D (mm)	L (mm)	I_R ▪ Max. Ripple Current +125°C ▪ 120Hz (mA rms)	CapXon Part Number
50	2.2	8	11.5	25	TH2R2M050F115A ☐☐
	3.3	8	11.5	30	TH3R3M050F115A ☐☐
	4.7	5	11	32	TH4R7M050C110A ☐☐
	4.7	8	11.5	42.5	TH4R7M050F115A ☐☐
	10	5	11	42	TH100M050C110A ☐☐
	10	6.3	11	48	TH100M050E110A ☐☐
	10	8	11.5	56	TH100M050F115A ☐☐
	22	5	11	66	TH220M050C110A ☐☐
	22	6.3	11	75	TH220M050E110A ☐☐
	22	8	11.5	86	TH220M050F115A ☐☐
	33	8	11.5	118	TH330M050F115A ☐☐
	47	6.3	11	120	TH470M050E110A ☐☐
	47	8	11.5	140	TH470M050F115A ☐☐
	47	10	12.5	164	TH470M050G125A ☐☐
	56	8	11.5	150	TH560M050F115A ☐☐
	68	8	11.5	160	TH680M050F115A ☐☐
	82	8	11.5	170	TH820M050F115A ☐☐
	100	10	12.5	230	TH101M050G125A ☐☐
	100	10	16	250	TH101M050G160A ☐☐
	100	10	20	277	TH101M050G200A ☐☐
	120	10	16	290	TH121M050G160A ☐☐
	180	10	20	400	TH181M050G200A ☐☐
	220	10	20	510	TH221M050G200A ☐☐
	220	10	25	560	TH221M050G250A ☐☐
	220	13	20	587	TH221M050I200A ☐☐
	270	10	20	610	TH271M050G200A ☐☐
	330	10	20	700	TH331M050G200A ☐☐
	330	13	20	810	TH331M050I200A ☐☐
	330	13	25	900	TH331M050I250A ☐☐
	470	13	25	900	TH471M050I250A ☐☐
	470	16	25	1000	TH471M050J250A ☐☐
	560	10	30	950	TH561M050G300A ☐☐
	680	13	25	1050	TH681M050I250A ☐☐
	1000	13	30	1390	TH102M050I300A ☐☐
	1200	13	35	1510	TH122M050I350A ☐☐
	1200	18	20	1450	TH122M050K200A ☐☐
	1500	13	40	1960	TH152M050I400A ☐☐
	1800	18	25	1960	TH182M050K250A ☐☐
	2200	18	31.5	2500	TH222M050K315A ☐☐
	2700	18	35.5	2750	TH272M050K355A ☐☐
	3300	18	40	2950	TH332M050K400A ☐☐

☐: Enter **blank** for Standard version ☐: Enter **X** for AEC-Q200 version

See "PACKAGING INFORMATION" to taped or formed products.

For further information please contact sales@capxon.org

STANDARD RATINGS

Part number shows bulk version with straight leads

V_R (V)	C_R (µF)	ø D (mm)	L (mm)	I_R ▪ Max. Ripple Current +125°C ▪ 120Hz (mA rms)	CapXon Part Number
63	4.7	6.3	11	38	TH4R7M063E110A ☐☐
	10	8	11.5	58	TH100M063F115A ☐☐
	22	8	11.5	93	TH220M063F115A ☐☐
	33	8	11.5	115	TH330M063F115A ☐☐
	33	10	12.5	132	TH330M063G125A ☐☐
	47	10	12.5	155	TH470M063G125A ☐☐
	47	10	16	172	TH470M063G160A ☐☐
	100	10	16	260	TH101M063G160A ☐☐
	180	10	20	400	TH181M063G200A ☐☐
	220	10	25	520	TH221M063G250A ☐☐
	220	13	25	595	TH221M063I250A ☐☐
	330	13	25	880	TH331M063I250A ☐☐
	330	16	25	1000	TH331M063J250A ☐☐
	390	13	20	800	TH391M063I200A ☐☐
	680	13	30	1290	TH681M063I300A ☐☐
	820	13	35	1420	TH821M063I350A ☐☐
	820	18	20	1360	TH821M063K200A ☐☐
	1200	18	25	1620	TH122M063K250A ☐☐
	1500	18	31.5	1980	TH152M063K315A ☐☐
	1800	16	40	2260	TH182M063J400A ☐☐
	2200	18	40	2680	TH222M063K400A ☐☐
80	22	8	11.5	120	TH220M080F115A ☐☐
	33	10	12.5	170	TH330M080G125A ☐☐
	47	10	12.5	200	TH470M080G125A ☐☐
	100	10	20	370	TH101M080G200A ☐☐
	330	13	25	870	TH331M080I250A ☐☐
	390	16	20	900	TH391M080J200A ☐☐
	470	16	25	1010	TH471M080J250A ☐☐
	560	13	35	1100	TH561M080I350A ☐☐
	560	16	25	1060	TH561M080J250A ☐☐
	560	18	20	1050	TH561M080K200A ☐☐
	680	16	31.5	1300	TH681M080J315A ☐☐
100	0.47	6.3	11	14	THR47M100E110A ☐☐
	1	6.3	11	24	TH010M100E110A ☐☐
	2.2	6.3	11	31	TH2R2M100E110A ☐☐
	3.3	6.3	11	36	TH3R3M100E110A ☐☐
	4.7	6.3	11	38	TH4R7M100E110A ☐☐
	4.7	8	11.5	48	TH4R7M100F115A ☐☐
	10	8	11.5	60	TH100M100F115A ☐☐
	10	10	12.5	70	TH100M100G125A ☐☐
	22	8	11.5	76	TH220M100F115A ☐☐
	22	10	12.5	90	TH220M100G125A ☐☐
	22	10	16	100	TH220M100G160A ☐☐

☐☐: Enter **blank** for Standard version ☐☐: Enter **X** for AEC-Q200 version

See "PACKAGING INFORMATION" to taped or formed products.

For further information please contact sales@capxon.org

STANDARD RATINGS

Part number shows bulk version with straight leads

V_R (V)	C_R (µF)	ø D (mm)	L (mm)	I_R ▪ Max. Ripple Current +125°C ▪ 120Hz (mA rms)	CapXon Part Number
100	33	10	12.5	130	TH330M100G125A ☐
	33	10	16	140	TH330M100G160A ☐ ☐
	33	10	20	158	TH330M100G200A ☐ ☐
	47	10	16	150	TH470M100G160A ☐ ☐
	47	10	25	175	TH470M100G250A ☐ ☐
	47	13	20	185	TH470M100I200A ☐ ☐
	100	13	25	320	TH101M100I250A ☐ ☐
	100	16	25	350	TH101M100J250A ☐ ☐
	330	13	35	890	TH331M100I350A ☐ ☐
	330	16	25	860	TH331M100J250A ☐ ☐
	330	18	20	850	TH331M100K200A ☐ ☐
	390	13	40	1050	TH391M100I400A ☐ ☐
	390	16	31.5	1050	TH391M100J315A ☐ ☐
	560	18	31.5	1290	TH561M100K315A ☐ ☐
	680	18	35.5	1480	TH681M100K355A ☐ ☐
	820	18	40	1850	TH821M100K400A ☐ ☐
160	1	6.3	11	23	TH010M160E110A ☐ ☐
	2.2	6.3	11	35	TH2R2M160E110A ☐ ☐
	3.3	6.3	11	37	TH3R3M160E110A ☐ ☐
	3.3	8	11.5	41	TH3R3M160F115A ☐ ☐
	4.7	8	11.5	52	TH4R7M160F115A ☐ ☐
	6.8	10	12.5	70	TH6R8M160G125A ☐ ☐
	10	8	11.5	70	TH100M160F115A ☐ ☐
	10	10	12.5	82	TH100M160G125A ☐ ☐
	22	10	16	115	TH220M160G160A ☐ ☐
	22	10	20	128	TH220M160G200A ☐ ☐
	33	13	20	200	TH330M160I200A ☐ ☐
	47	13	20	240	TH470M160I200A ☐ ☐
	47	13	25	260	TH470M160I250A ☐ ☐
	82	10	30	340	TH820M160G300A ☐ ☐
	100	10	35	380	TH101M160G350A ☐ ☐
	100	13	25	390	TH101M160I250A ☐ ☐
	100	16	25	430	TH101M160J250A ☐ ☐
	120	10	40	450	TH121M160G400A ☐ ☐
	150	13	30	500	TH151M160I300A ☐ ☐
	180	13	35	600	TH181M160I350A ☐ ☐
	180	18	20	550	TH181M160K200A ☐ ☐
	220	16	31.5	690	TH221M160J315A ☐ ☐
	330	18	35.5	900	TH331M160K355A ☐ ☐
200	1	6.3	11	23	TH010M200E110A ☐ ☐
	2.2	6.3	11	35	TH2R2M200E110A ☐ ☐
	3.3	8	11.5	48	TH3R3M200F115A ☐ ☐
	4.7	8	11.5	50	TH4R7M200F115A ☐ ☐

☐: Enter **blank** for Standard version ☐: Enter **X** for AEC-Q200 version

See "PACKAGING INFORMATION" to taped or formed products.

STANDARD RATINGS

Part number shows bulk version with straight leads

V_R (V)	C_R (µF)	ø D (mm)	L (mm)	I_R ▪ Max. Ripple Current +125°C ▪ 120Hz (mA rms)	CapXon Part Number
200	4.7	10	12.5	60	TH4R7M200G125A [ ]
	6.8	10	12.5	70	TH6R8M200G125A [ ]
	10	10	12.5	80	TH100M200G125A [ ]
	22	10	20	140	TH220M200G200A [ ]
	22	10	25	150	TH220M200G250A [ ]
	22	13	20	160	TH220M200I200A [ ]
	33	13	20	200	TH330M200I200A [ ]
	33	13	25	220	TH330M200I250A [ ]
	47	13	20	245	TH470M200I200A [ ]
	47	13	25	270	TH470M200I250A [ ]
	47	16	25	300	TH470M200J250A [ ]
	56	13	20	260	TH560M200I200A [ ]
	82	13	25	360	TH820M200I250A [ ]
	100	13	30	430	TH101M200I300A [ ]
	100	16	20	400	TH101M200J200A [ ]
	100	16	25	440	TH101M200J250A [ ]
	100	16	31.5	490	TH101M200J315A [ ]
	150	13	40	600	TH151M200I400A [ ]
	150	16	25	530	TH151M200J250A [ ]
	180	18	25	650	TH181M200K250A [ ]
	220	18	31.5	850	TH221M200K315A [ ]
	330	18	35.5	1100	TH331M200K355A [ ]
250	1	6.3	11	23	TH010M250E110A [ ]
	2.2	6.3	11	35	TH2R2M250E110A [ ]
	2.2	8	11.5	40	TH2R2M250F115A [ ]
	3.3	8	11.5	50	TH3R3M250F115A [ ]
	3.3	10	12.5	53	TH3R3M250G125A [ ]
	4.7	10	12.5	60	TH4R7M250G125A [ ]
	4.7	10	16	68	TH4R7M250G160A [ ]
	6.8	10	16	75	TH6R8M250G160A [ ]
	10	10	16	83	TH100M250G160A [ ]
	22	13	20	160	TH220M250I200A [ ]
	22	13	25	170	TH220M250I250A [ ]
	33	13	25	220	TH330M250I250A [ ]
	33	16	25	240	TH330M250J250A [ ]
	39	10	30	230	TH390M250G300A [ ]
	47	10	35	280	TH470M250G350A [ ]
	47	16	25	300	TH470M250J250A [ ]
	47	16	31.5	330	TH470M250J315A [ ]
	56	10	40	300	TH560M250G400A [ ]
	68	13	30	330	TH680M250I300A [ ]
	82	13	35	380	TH820M250I350A [ ]
	82	18	20	350	TH820M250K200A [ ]

[ ]: Enter **blank** for Standard version [ ]: Enter **X** for AEC-Q200 version

See "PACKAGING INFORMATION" to taped or formed products.

For further information please contact sales@capxon.org

STANDARD RATINGS

Part number shows bulk version with straight leads

V_R (V)	C_R (µF)	ø D (mm)	L (mm)	I_R ▪ Max. Ripple Current +125°C ▪ 120Hz (mA rms)	CapXon Part Number
250	100	13	40	490	TH101M250I400A [ ]
	120	18	25	460	TH121M250K250A [ ]
	220	18	35.5	850	TH221M250K355A [ ]
350	1	8	11.5	26	TH010M350F115A [ ]
	2.2	8	11.5	40	TH2R2M350F115A [ ]
	2.2	10	12.5	47	TH2R2M350G125A [ ]
	3.3	10	12.5	55	TH3R3M350G125A [ ]
	3.3	10	16	60	TH3R3M350G160A [ ]
	4.7	10	16	68	TH4R7M350G160A [ ]
	4.7	10	20	75	TH4R7M350G200A [ ]
	5.6	10	20	78	TH5R6M350G200A [ ]
	6.8	13	20	85	TH6R8M350I200A [ ]
	10	10	25	105	TH100M350G250A [ ]
	10	13	20	110	TH100M350I200A [ ]
	22	13	25	180	TH220M350I250A [ ]
	22	16	25	200	TH220M350J250A [ ]
	27	10	30	180	TH270M350G300A [ ]
	33	10	35	220	TH330M350G350A [ ]
	33	16	25	230	TH330M350J250A [ ]
	33	16	31.5	260	TH330M350J315A [ ]
	47	13	30	280	TH470M350I300A [ ]
	47	16	31.5	320	TH470M350J315A [ ]
	47	16	35.5	340	TH470M350J355A [ ]
	56	13	35	330	TH560M350I350A [ ]
	56	16	25	320	TH560M350J250A [ ]
	56	18	20	310	TH560M350K200A [ ]
	68	13	40	390	TH680M350I400A [ ]
400	1	10	12.5	30	TH010M400G125A [ ]
	2.2	10	16	50	TH2R2M400G160A [ ]
	3.3	10	16	60	TH3R3M400G160A [ ]
	4.7	10	16	70	TH4R7M400G160A [ ]
	4.7	10	20	80	TH4R7M400G200A [ ]
	5.6	10	20	85	TH5R6M400G200A [ ]
	6.8	13	20	90	TH6R8M400I200A [ ]
	10	13	20	110	TH100M400I200A [ ]
	22	13	25	180	TH220M400I250A [ ]
	27	13	25	190	TH270M400I250A [ ]
	33	16	20	220	TH330M400J200A [ ]
	33	16	25	240	TH330M400J250A [ ]
	47	16	25	290	TH470M400J250A [ ]
	47	16	31.5	320	TH470M400J315A [ ]

[ ]: Enter **blank** for Standard version [ ]: Enter **X** for AEC-Q200 version

See "PACKAGING INFORMATION" to taped or formed products.

DIMENSIONS ▪ All dimensions in mm

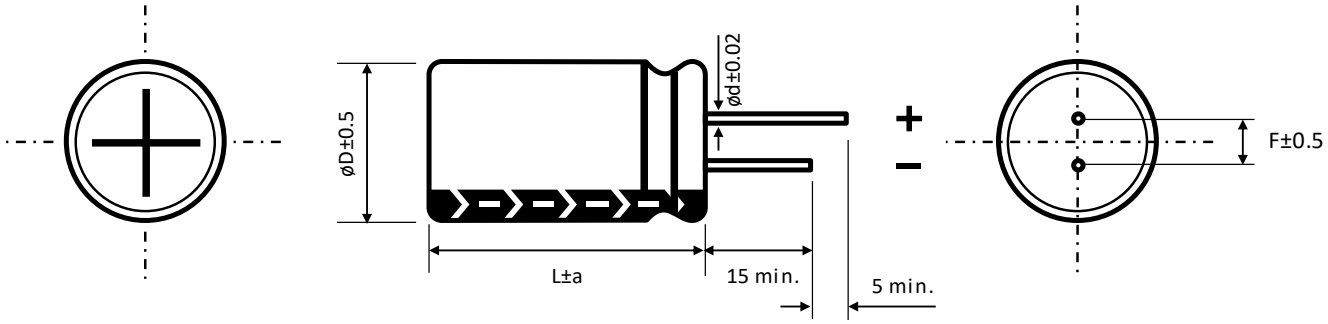

ø D	5	6.3	8		10	13	16	18
F	2	2.5	3.5		5	5	7.5	7.5
ø d	0.5		L < 20	L ≥ 20	0.6		0.8	
			0.5	0.6				

a	ø D < 16	ø D = 16		ø D = 18	
	1.5	L = 25 to 35.5	L < 25 and L ≥ 40	L = 25 to 31.5	L < 25 and L ≥ 35.5
		1.5	2	1.5	2

MULTIPLIER K_f for RIPPLE CURRENT vs. FREQUENCY

C_R (µF) / Frequency (Hz)	50/60	100/120	400	1k	10k	50k ~ 100k
$C_R \leq 10$	0.8	1	1.3	1.45	1.65	1.7
$10 < C_R \leq 100$	0.8	1	1.23	1.36	1.48	1.53
$100 < C_R \leq 1000$	0.8	1	1.16	1.25	1.35	1.38
$1000 \leq C_R$	0.8	1	1.11	1.17	1.25	1.28

PRECAUTIONS, GUIDELINES AND PACKAGING INFORMATON

Unless otherwise agreed in individual specifications, all products are subject to our “General Precautions and Guidelines” as well as our “Packaging Information”. Please refer to the following links in the table.

General Precautions and Guidelines	Packaging Information Liquid Radial
Page 837	Page 336

For further information please contact sales@capxon.org

DISCLAIMER

All product related data (e.g. specification, statements and general information) are subject to change without any notice. It is necessary that the customer observes all product related technical / application information and handling instructions.

CapXon products are designed and manufactured according to severe quality and safety standards. Under no circumstance, CapXon warrants that any CapXon product is suitable for the purposes intended for your application, even CapXon knows the application. It is customer's duty and obligation to check and make sure that CapXon products are suitable for the purposes intended and select the correct and proper CapXon product. Customers are requested to perform a sufficient validation and reliability evaluation to assure needed safety level and reliability performance by suitable designs and to apply proper safeguards (e.g. redundancies, protective circuits).

Particular operating conditions (ambient temperature, ripple current, voltage, thermal resistance, etc.) as well as storage, production or assembly may affect the performance and the lifetime of the capacitor. Please consult CapXon for lifetime estimation, failure mode considerations or worst-case scenarios according to the product technology, product tolerances / deviations or change of the characteristics of the capacitor due to shipment, storage, handling, production and usage.

For aerospace or military application, life-saving, life-sustaining, safety critical applications or any application where failure may cause severe personal injury or death, please consult us before design-in the capacitor in your application.

Except for the written expressed warranties, CapXon does not impliedly, by assumption or whatever else, warrant, undertake, promise any other warranty or guaranty for any CapXon product.

For further information, please visit our website www.capxongroup.com or contact CapXon directly.

TE SERIES ▪ HIGH TEMP., AUTOMOTIVE 130°C TYPE



KEY FEATURES

AEC-Q 200 · HIGH VOLTAGE · HIGH TEMPERATURE

- **ALUMINUM ELECTROLYTIC CAPACITOR** ▪ THT type
- Endurance: 130°C ▪ 1000 hours up to 3000 hours
- Especially for applications with high ambient temperatures
- High reliability
- AEC-Q200 version available

HF Halogen Free · RoHS & REACH COMPLIANT

SPECIFICATIONS

Items		Performance Characteristics		
Operating Temperature Range		-40 ~ +130°C		-25 ~ +130°C
Rated Voltage Range	V_R	10 ~ 400V DC		450V DC
Surge Voltage	V_S	($V_R \le 315V$): $V_S = 1.15 \cdot V_R$		($V_R > 315V$): $V_S = 1.10 \cdot V_R$
Capacitance Range	C_R	2.2 ~ 4700µF		1 ~ 100µF
Cap. Tolerance	ΔC	±20% (120Hz ▪ 20°C)		
Leakage Current (20°C ▪ V_R applied)	I_{LEAK}	10 ~ 100V		≤ $0.01C_R \cdot V_R$ or 3µA (After 2 minutes)
		160 ~ 450V	$C_R \cdot V_R \le 1000$	≤ $0.1C_R \cdot V_R$ + 40µA (After 1 minute)
			$C_R \cdot V_R > 1000$	≤ $0.04C_R \cdot V_R$ + 100µA (After 1 minute)

Dissipation Factor % (20°C ▪ 120Hz)	tanδ							
		V_R (V DC)	10	16	25	35	50	63
		tanδ (%)	20	16	14	12	10	9
		V_R (V DC)	100	160	200	250	350	400	450
		tanδ (%)	8	15	15	15	20	20	25
		For $C_R \ge 1000µF$, add 2% per every multiple 1000µF of rated capacitance value							

Low Temperature Characteristics at 120Hz	Z ratio max.					
		V_R (V DC)	10	16 ~ 100	160 ~ 250	350 ~ 400	450
		Z-25°C/Z+20°C	3	2	3	5	6
		Z-40°C/Z+20°C	4	4	6	-	-
		For capacitance > 1000µF					
		Z-25°C/Z+20°C	Add 0.5 for every multiple 1000µF of rated capacitance value				
		Z-40°C/Z+20°C	Add 1 for every multiple 1000µF of rated capacitance value				

Lifetime Test			
Endurance 130°C (V_R & I_R applied)	Test	**1000 hours**	ø D 6.3 mm
		2000 hours	ø D 8 mm
		3000 hours	ø D ≥ 10 mm ▪ 10 ~ 100V
		2000 hours	ø D ≥ 10 mm ▪ 160 ~ 450V
	△C/C_R	≤ ±30% of initial measured value	
	tanδ	≤ 300% of initial specified value	
	I_{Leak}	≤ the initial specified value	
Shelf Life 130°C (V_R = 0)	Test	**1000 hours**	
	△C/C_R	≤ ±30% of initial measured value	
	tanδ	≤ 300% of initial specified value	
	I_{Leak}	≤ the initial specified value	
	Before measurement: Restore capacitor to 20°C, apply V_R for 30 min according JIS-C-5101-4		

For further information please contact sales@capxon.org

STANDARD RATINGS

Part number shows bulk version with straight leads

V_R (V)	C_R (µF)	ø D (mm)	L (mm)	I_R ▪ Max. Ripple Current +130°C ▪ 100kHz (mA rms)	CapXon Part Number
10	220	8	11.5	360	TE221M010F115A ☐
	330	8	11.5	475	TE331M010F115A ☐
	330	10	12.5	500	TE331M010G125A ☐
	470	10	12.5	670	TE471M010G125A ☐
	470	10	16	720	TE471M010G160A ☐
	1000	10	20	1175	TE102M010G200A ☐
	1500	13	20	1495	TE152M010I200A ☐
	2200	13	25	1690	TE222M010I250A ☐
	3300	16	25	2275	TE332M010J250A ☐
	4700	16	31.5	2765	TE472M010J315A ☐
16	220	8	11.5	360	TE221M016F115A ☐
	220	10	12.5	375	TE221M016G125A ☐
	330	8	11.5	395	TE331M016F115A ☐
	330	10	16	515	TE331M016G160A ☐
	470	10	12.5	655	TE471M016G125A ☐
	470	10	20	800	TE471M016G200A ☐
	1000	10	20	1175	TE102M016G200A ☐
	1000	13	20	1240	TE102M016I200A ☐
	1500	13	20	1515	TE152M016I200A ☐
	1500	13	25	1665	TE152M016I250A ☐
	2200	13	25	1690	TE222M016I250A ☐
	2200	16	25	1875	TE222M016J250A ☐
	3300	16	31.5	2690	TE332M016J315A ☐
	4700	16	35.5	2940	TE472M016J355A ☐
25	220	8	11.5	360	TE221M025F115A ☐
	220	10	16	475	TE221M025G160A ☐
	330	10	12.5	630	TE331M025G125A ☐
	330	10	20	775	TE331M025G200A ☐
	470	10	16	755	TE471M025G160A ☐
	470	13	20	960	TE471M025I200A ☐
	1000	13	20	1240	TE102M025I200A ☐
	1000	16	25	1465	TE102M025J250A ☐
	1500	16	25	1865	TE152M025J250A ☐
	1500	16	31.5	2065	TE152M025J315A ☐
	2200	16	31.5	2380	TE222M025J315A ☐
	2200	16	35.5	2515	TE222M025J355A ☐
	3300	16	35.5	2695	TE332M025J355A ☐
	3300	18	35.5	2875	TE332M025K355A ☐

☐: Enter **blank** for Standard version ☐: Enter **X** for AEC-Q200 version

See "PACKAGING INFORMATION" to taped or formed products.

For further information please contact sales@capxon.org

STANDARD RATINGS

Part number shows bulk version with straight leads

V_R (V)	C_R (µF)	ø D (mm)	L (mm)	I_R ▪ Max. Ripple Current +130°C ▪ 100kHz (mA rms)	CapXon Part Number
35	100	8	11.5	460	TE101M035F115A ☐
	100	10	16	600	TE101M035G160A ☐
	220	10	12.5	610	TE221M035G125A ☐
	220	10	20	745	TE221M035G200A ☐
	330	10	16	790	TE331M035G160A ☐
	330	13	20	1000	TE331M035I200A ☐
	470	10	20	920	TE471M035G200A ☐
	470	13	25	1175	TE471M035I250A ☐
	1000	13	25	1235	TE102M035I250A ☐
	1000	16	31.5	1535	TE102M035J315A ☐
	1500	16	31.5	2340	TE152M035J315A ☐
	1500	16	35.5	2465	TE152M035J355A ☐
	2200	16	35.5	2695	TE222M035J355A ☐
	2200	18	35.5	2875	TE222M035K355A ☐
50	10	6.3	11	140	TE100M050E110A ☐
	22	6.3	11	200	TE220M050E110A ☐
	22	8	11.5	240	TE220M050F115A ☐
	33	8	11.5	285	TE330M050F115A ☐
	47	8	11.5	275	TE470M050F115A ☐
	47	10	12.5	315	TE470M050G125A ☐
	100	10	12.5	465	TE101M050G125A ☐
	100	10	16	515	TE101M050G160A ☐
	220	10	20	865	TE221M050G200A ☐
	220	13	20	1000	TE221M050I200A ☐
	330	13	20	1065	TE331M050I200A ☐
	330	13	25	1175	TE331M050I250A ☐
	470	16	20	1240	TE471M050J200A ☐
	470	16	25	1335	TE471M050J250A ☐
	1000	16	31.5	2465	TE102M050J315A ☐
	2200	18	40	3065	TE222M050K400A ☐
63	33	8	11.5	255	TE330M063F115A ☐
	47	10	12.5	285	TE470M063G125A ☐
	100	10	16	415	TE101M063G160A ☐
	220	13	20	845	TE221M063I200A ☐
	330	13	25	1145	TE331M063I250A ☐
	470	16	25	1455	TE471M063J250A ☐
	1000	16	31.5	1865	TE102M063J315A ☐
	1500	18	40	2735	TE152M063K400A ☐

☐: Enter **blank** for Standard version ☐: Enter **X** for AEC-Q200 version

See "PACKAGING INFORMATION" to taped or formed products.

For further information please contact sales@capxon.org

STANDARD RATINGS

Part number shows bulk version with straight leads

V_R (V)	C_R (µF)	ø D (mm)	L (mm)	I_R ▪ Max. Ripple Current +130°C ▪ 100kHz (mA rms)	CapXon Part Number
100	4.7	8	11.5	115	TE4R7M100F115A ☐
	10	8	11.5	130	TE100M100F115A ☐
	22	8	11.5	190	TE220M100F115A ☐
	33	10	12.5	275	TE330M100G125A ☐
	47	10	16	285	TE470M100G160A ☐
	100	13	20	545	TE101M100I200A ☐
	220	16	25	1000	TE221M100J250A ☐
	330	16	31.5	1345	TE331M100J315A ☐
	470	18	31.5	1600	TE471M100K315A ☐
160	3.3	6.3	11	65	TE3R3M160E110A ☐
	4.7	6.3	11	70	TE4R7M160E110A ☐
	4.7	8	11.5	85	TE4R7M160F115A ☐
	5.6	8	11.5	100	TE5R6M160F115A ☐
	6.8	8	11.5	110	TE6R8M160F115A ☐
	6.8	8	16	130	TE6R8M160F160A ☐
	10	8	16	145	TE100M160F160A ☐
	15	8	16	190	TE150M160F160A ☐
	22	10	16	310	TE220M160G160A ☐
	33	10	20	360	TE330M160G200A ☐
	47	13	20	460	TE470M160I200A ☐
	68	13	25	585	TE680M160I250A ☐
	100	16	25	820	TE101M160J250A ☐
	150	16	31.5	940	TE151M160J315A ☐
200	3.3	6.3	11	70	TE3R3M200E110A ☐
	4.7	6.3	11	75	TE4R7M200E110A ☐
	4.7	8	11.5	85	TE4R7M200F115A ☐
	5.6	8	11.5	100	TE5R6M200F115A ☐
	5.6	8	16	120	TE5R6M200F160A ☐
	6.8	8	11.5	115	TE6R8M200F115A ☐
	6.8	8	16	135	TE6R8M200F160A ☐
	10	8	16	160	TE100M200F160A ☐
	10	8	20	180	TE100M200F200A ☐
	15	8	16	190	TE150M200F160A ☐
	15	8	20	210	TE150M200F200A ☐
	22	8	20	310	TE220M200F200A ☐
	22	10	16	310	TE220M200G160A ☐
	22	10	20	320	TE220M200G200A ☐
	33	10	20	360	TE330M200G200A ☐
	33	13	20	410	TE330M200I200A ☐
	47	13	20	460	TE470M200I200A ☐
	47	13	25	515	TE470M200I250A ☐
	68	16	20	585	TE680M200J200A ☐
	68	16	25	630	TE680M200J250A ☐

☐: Enter **blank** for Standard version ☐: Enter **X** for AEC-Q200 version

See "PACKAGING INFORMATION" to taped or formed products.

For further information please contact sales@capxon.org

STANDARD RATINGS

Part number shows bulk version with straight leads

V_R (V)	C_R (µF)	ø D (mm)	L (mm)	I_R ▪ Max. Ripple Current +130°C ▪ 100kHz (mA rms)	CapXon Part Number
200	100	13	30	675	TE101M200I300A ☐☐
	100	16	25	820	TE101M200J250A ☐☐
	150	13	40	880	TE151M200I400A ☐☐
	150	16	35.5	945	TE151M200J355A ☐☐
250	3.3	6.3	11	75	TE3R3M250E110A ☐☐
	4.7	8	11.5	110	TE4R7M250F115A ☐☐
	5.6	8	11.5	110	TE5R6M250F115A ☐☐
	6.8	8	16	135	TE6R8M250F160A ☐☐
	8.2	8	16	165	TE8R2M250F160A ☐☐
	10	8	16	180	TE100M250F160A ☐☐
	15	8	20	220	TE150M250F200A ☐☐
	22	10	16	300	TE220M250G160A ☐☐
	33	13	20	450	TE330M250I200A ☐☐
	47	13	20	475	TE470M250I200A ☐☐
	68	13	30	640	TE680M250I300A ☐☐
	68	16	25	640	TE680M250J250A ☐☐
	100	13	35	710	TE101M250I350A ☐☐
	100	16	31.5	835	TE101M250J315A ☐☐
	150	13	50	980	TE151M250I500A ☐☐
	150	16	35.5	1025	TE151M250J355A ☐☐
350	2.2	6.3	11	60	TE2R2M350E110A ☐☐
	3.3	8	11.5	85	TE3R3M350F115A ☐☐
	4.7	8	11.5	110	TE4R7M350F115A ☐☐
	5.6	8	16	125	TE5R6M350F160A ☐☐
	6.8	8	20	150	TE6R8M350F200A ☐☐
	8.2	8	20	170	TE8R2M350F200A ☐☐
	10	10	20	195	TE100M350G200A ☐☐
	15	10	20	250	TE150M350G200A ☐☐
	22	13	20	310	TE220M350I200A ☐☐
	33	16	20	450	TE330M350J200A ☐☐
	47	16	20	540	TE470M350J200A ☐☐
	68	18	25	645	TE680M350K250A ☐☐
	100	18	31.5	850	TE101M350K315A ☐☐
400	2.2	6.3	11	75	TE2R2M400E110A ☐☐
	2.2	8	11.5	85	TE2R2M400F115A ☐☐
	2.2	8	16	95	TE2R2M400F160A ☐☐
	2.7	8	16	100	TE2R7M400F160A ☐☐
	3.3	8	11.5	95	TE3R3M400F115A ☐☐
	3.3	8	16	115	TE3R3M400F160A ☐☐
	3.3	8	20	125	TE3R3M400F200A ☐☐
	4.7	8	11.5	110	TE4R7M400F115A ☐☐
	4.7	8	20	125	TE4R7M400F200A ☐☐
	4.7	10	16	125	TE4R7M400G160A ☐☐

☐: Enter **blank** for Standard version ☐: Enter **X** for AEC-Q200 version

See "PACKAGING INFORMATION" to taped or formed products.

For further information please contact sales@capxon.org

STANDARD RATINGS

Part number shows bulk version with straight leads

V_R (V)	C_R (µF)	ø D (mm)	L (mm)	I_R ▪ Max. Ripple Current +130°C ▪ 100kHz (mA rms)	CapXon Part Number
400	5.6	8	20	135	TE5R6M400F200A ☐☐
	5.6	10	16	135	TE5R6M400G160A ☐☐
	5.6	10	20	150	TE5R6M400G200A ☐☐
	6.8	8	20	150	TE6R8M400F200A ☐☐
	6.8	10	16	150	TE6R8M400G160A ☐☐
	6.8	10	20	165	TE6R8M400G200A ☐☐
	8.2	10	16	170	TE8R2M400G160A ☐☐
	8.2	10	20	190	TE8R2M400G200A ☐☐
	10	10	16	190	TE100M400G160A ☐☐
	10	10	20	200	TE100M400G200A ☐☐
	10	10	25	215	TE100M400G250A ☐☐
	15	13	20	260	TE150M400I200A ☐☐
	22	13	25	345	TE220M400I250A ☐☐
	33	16	25	460	TE330M400J250A ☐☐
	47	13	40	520	TE470M400I400A ☐☐
	47	16	31.5	610	TE470M400J315A ☐☐
	47	18	25	579	TE470M400K250A ☐☐
	68	13	55	745	TE680M400I550A ☐☐
	68	18	31.5	660	TE680M400K315A ☐☐
	100	18	40	880	TE101M400K400A ☐☐
450	1	8	11.5	65	TE010M450F115A ☐☐
	2.2	8	16	95	TE2R2M450F160A ☐☐
	3.3	8	16	100	TE3R3M450F160A ☐☐
	4.7	8	20	125	TE4R7M450F200A ☐☐
	5.6	10	16	135	TE5R6M450G160A ☐☐
	6.8	10	20	165	TE6R8M450G200A ☐☐
	8.2	10	20	190	TE8R2M450G200A ☐☐
	10	10	25	215	TE100M450G250A ☐☐
	10	13	20	215	TE100M450I200A ☐☐
	15	13	20	260	TE150M450I200A ☐☐
	22	10	40	350	TE220M450G400A ☐☐
	22	16	20	345	TE220M450J200A ☐☐
	22	16	25	385	TE220M450J250A ☐☐
	33	10	50	450	TE330M450G500A ☐☐
	33	16	25	485	TE330M450J250A ☐☐
	33	16	31.5	545	TE330M450J315A ☐☐
	47	13	45	565	TE470M450I450A ☐☐
	47	16	35.5	600	TE470M450J355A ☐☐
	68	18	31.5	660	TE680M450K315A ☐☐
	100	18	40	880	TE101M450K400A ☐☐

☐: Enter **blank** for Standard version ☐: Enter **X** for AEC-Q200 version

See "PACKAGING INFORMATION" to taped or formed products.

For further information please contact sales@capxon.org

DIMENSIONS ▪ All dimensions in mm

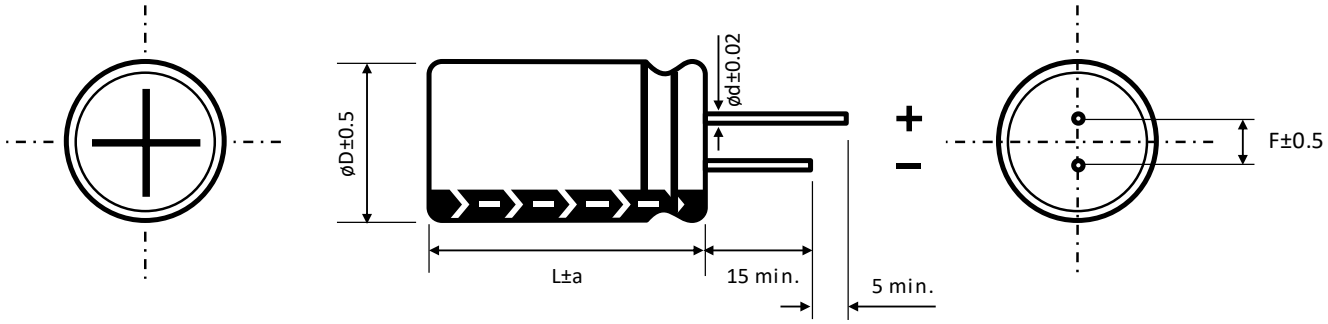

ø D	6.3	8		10	13	16	18
F	2.5	3.5		5	5	7.5	7.5
ø d	0.5	L < 20	L ≥ 20	0.6		0.8	
		0.5	0.6				

a	ø D < 16	ø D = 16		ø D = 18	
	1.5	L = 25 to 35.5	L < 25 and L ≥ 40	L = 25 to 31.5	L < 25 and L ≥ 35.5
		1.5	2	1.5	2

MULTIPLIER K_f for RIPPLE CURRENT vs. FREQUENCY

10 ~ 100V

C_R (µF) / Frequency (Hz)	50/60	100/120	1k	10k	50k ~ 100k
C_R < 10	0.35	0.42	0.6	0.8	1
10 ~ 33	0.45	0.55	0.75	0.9	1
47 ~ 330	0.6	0.7	0.85	0.95	1
470 ~ 1500	0.65	0.75	0.9	0.98	1
1500 ≤ C_R	0.75	0.8	0.95	1	1

160 ~ 450V

C_R (µF) / Frequency (Hz)	100/120	400	1k	10k	50k ~ 100k
C_R < 33	0.4	0.6	0.75	0.9	1
C_R ≥ 33	0.45	0.65	0.8	0.95	1

PRECAUTIONS, GUIDELINES AND PACKAGING INFORMATON

Unless otherwise agreed in individual specifications, all products are subject to our “General Precautions and Guidelines” as well as our “Packaging Information”. Please refer to the following links in the table.

General Precautions and Guidelines	Packaging Information Liquid Radial
Page 837	Page 336

For further information please contact sales@capxon.org

DISCLAIMER

All product related data (e.g. specification, statements and general information) are subject to change without any notice. It is necessary that the customer observes all product related technical / application information and handling instructions.

CapXon products are designed and manufactured according to severe quality and safety standards. Under no circumstance, CapXon warrants that any CapXon product is suitable for the purposes intended for your application, even CapXon knows the application. It is customer's duty and obligation to check and make sure that CapXon products are suitable for the purposes intended and select the correct and proper CapXon product. Customers are requested to perform a sufficient validation and reliability evaluation to assure needed safety level and reliability performance by suitable designs and to apply proper safeguards (e.g. redundancies, protective circuits).

Particular operating conditions (ambient temperature, ripple current, voltage, thermal resistance, etc.) as well as storage, production or assembly may affect the performance and the lifetime of the capacitor. Please consult CapXon for lifetime estimation, failure mode considerations or worst-case scenarios according to the product technology, product tolerances / deviations or change of the characteristics of the capacitor due to shipment, storage, handling, production and usage.

For aerospace or military application, life-saving, life-sustaining, safety critical applications or any application where failure may cause severe personal injury or death, please consult us before design-in the capacitor in your application.

Except for the written expressed warranties, CapXon does not impliedly, by assumption or whatever else, warrant, undertake, promise any other warranty or guaranty for any CapXon product.

For further information, please visit our website www.capxongroup.com or contact CapXon directly.

PRODUCT CODE ▪ RADIAL ALUMINUM ELECTROLYTIC CAPACITORS

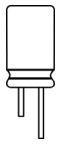

THT type example:
GH series ▪ 330µF ▪ 80V ▪ ±20% ▪ Ø 13mm ▪ H 20mm ▪ P 5mm ▪ Tape Ammo ▪ AEC-Q200

1	2	3	4	5	6	7	8	9	10	11	12	13	14	15	16	17	18	19	20
G	H	3	3	1	M	0	8	0	I	2	0	0	E	T	A	X	-	-	-
Series		Capacitance			Capacitance tolerance	Voltage			Case Ø (mm)	Height (mm)			Type code	Taping / lead treatment *		Special requirement			

Code	µF
0R1	0.1
R47	0.47
010	1
4R7	4.7
100	10
220	22
101	100
561	560
102	1000
472	4700
103	10000
333	33000

Code	%
H	±5
K	±10
S	±15
M	±20
N	±30
D	±40
I	+5 to +20
B	0 to -20
G	0 to +10
Z	0 to +20
Y	0 to +30
X	0 to +40
A	0 to +50
J	-5 to +20
C	-5 to +30
E	-8 to +5
V	-10 to +20
Q	-10 to +30
T	-10 to +50
W	-20 to +10
P	-15 to +20
L	-25 to +20
U	-30 to 0
F	-35 to 0
O	-50 to 0

Code	Volt
004	4
6R3	6.3
010	10
016	16
025	25
035	35
050	50
063	63
080	80
100	100
160	160
200	200
220	220
250	250
350	350
400	400
420	420
450	450
500	500

Code	ØD
B	4
C	5
E	6.3
F	8
G	10
H	12
Z	12.5
I	13
J	16
K	18
L	20
M	22

Code	H
050	5
070	7
090	9
110	11
115	11.5
125	12.5
130	13
140	14
150	15
160	16
200	20
250	25
300	30
315	31.5
350	35
355	35.5
400	40
450	45
500	50
550	55
600	60

Code	Type
A	Without lead treatment
E	With lead treatment

See chapters taping or lead treatment

Code	Special
X	AEC-Q200

See datasheet for reference

* See chapter taping or lead treatment for further information
Please consult CapXon for further assistance

MARKING ▪ RADIAL ALUMINUM ELECTROLYTIC CAPACITORS

Aluminum Electrolytic Capacitor ▪ Radial type

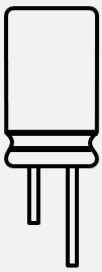

CapXon:	Manufacturer trademark
330µF:	Nominal capacitance
80V:	Rated voltage (V) ▪ Standard type
	(-) polarity (Cathode indicate)
GH:	Series
105°C:	Maximum operating temperature
P1944:	Production datacode year/week (ex. 2019/CW44)
X:	AEC-Q200 type
VENT:	Safety vent

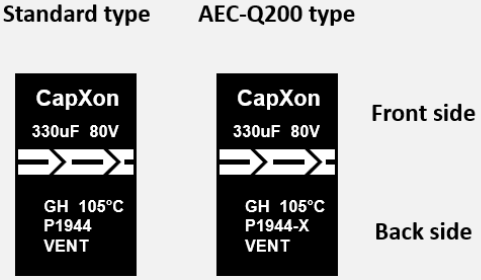

For further information please contact sales@capxon.org

TAPING ▪ RADIAL ALUMINUM ELECTROLYTIC CAPACITORS

Possible tape versions in AMMO packaging with lead space F and taping ordering code.
All dimensions in mm.

D	Diameter	4	5	6.3	8	10	12.5	13	16	18	20	22	25	Code
F	Lead space Straight leads	1.5	2	2.5	3.5	5	5	5	7.5	7.5	10	10	10	
F	Ammo Tape	**2**	**2**	-	-	-	-	-	-	-	-	-	-	TB
	Ammo Tape	**2.5**	**2.5**	**2.5**	-	-	-	-	-	-	-	-	-	TC
	Ammo Tape	-	-	-	**3.5**	-	-	-	-	-	-	-	-	TD
	Ammo Tape	**5**	**5**	**5**	**5**	**5**	**5**	**5**	-	-	-	-	-	TA
	Ammo Tape	-	-	-	-	-	-	-	**7.5**	**7.5**	-	-	-	TE
	Ammo Tape	-	-	-	-	-	-	**5**	-	-	-	-	-	PA

Possible tape versions in REEL packaging with lead space F and taping ordering code.
All dimensions in mm.

D	Diameter	4	5	6.3	8	10	12.5	13	16	18	20	22	25	Code
F	Lead space Straight leads	1.5	2	2.5	3.5	5	5	5	7.5	7.5	10	10	10	
F	Reel Tape	**2**	**2**	-	-	-	-	-	-	-	-	-	-	RB
	Reel Tape	**2.5**	**2.5**	**2.5**	-	-	-	-	-	-	-	-	-	RC
	Reel Tape	-	-	-	**3.5**	-	-	-	-	-	-	-	-	RD
	Reel Tape	**5**	**5**	**5**	**5**	**5**	**5**	**5**	-	-	-	-	-	RA
	Reel Tape	-	-	-	-	-	-	-	**7.5**	**7.5**	-	-	-	RE
	Reel Tape	-	-	-	-	-	-	**5**	-	-	-	-	-	QA

Details to the exact tape dimensions can be found in the following drawings on the next pages:

T1 taping ▪ ØD 5 and 6.3mm ▪ standard lead space

T2 taping ▪ ØD 4 and 5mm ▪ wide lead space

T3 taping ▪ ØD 8 to 13mm ▪ standard lead space

T4 taping ▪ ØD 4 to 8mm ▪ lead space F = 5mm

T5 taping ▪ ØD ≥ 13mm ▪ wide component space

TAPING ▪ RADIAL ALUMINUM ELECTROLYTIC CAPACITORS

T1 taping ▪ ØD 5 and 6.3mm ▪ standard lead space

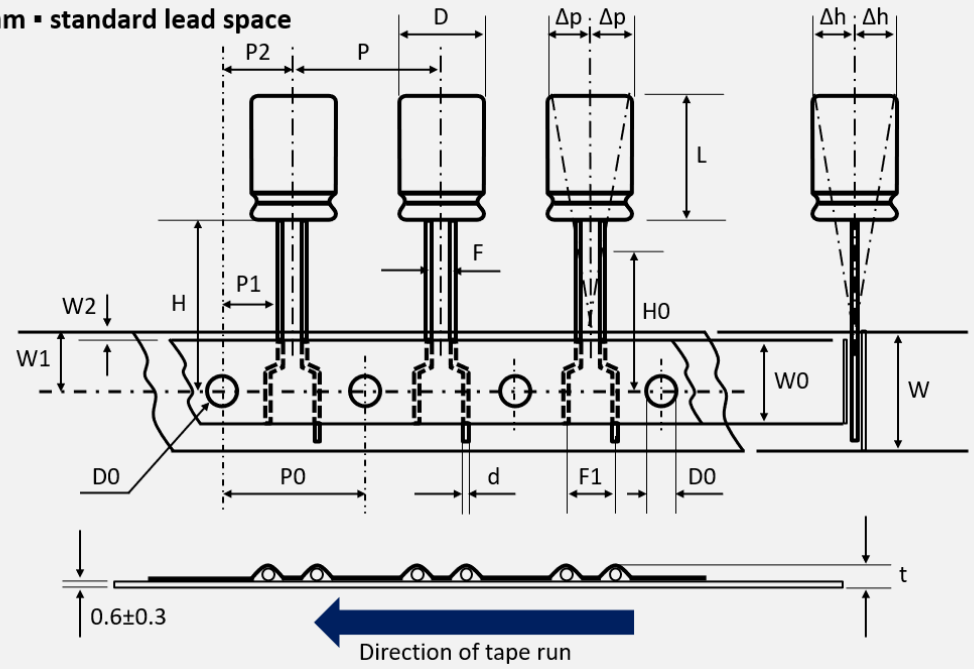

Example

F H	3 3 0	M	0 3 5	C	1 1 0	E	T B	- - - -
Series	Capacitance	Tolerance	Voltage	ØD (mm)	Height (mm)	Type code	Lead treatment	Special requirement

All dimensions in mm

	D	L	d	P	P0	P1	P2	F	F1	W	W0	W1	W2	H	D0	Δh	Δp	t	Code
Tol	±0.5	-	±0.02	±1.0	±0.2	±0.7	±1.3	+0.4 -0.2	±0.5	±0.5	±0.5	±0.5	Max	+0.75 -0.5	±0.2	Max	Max	Max	
Item	5	5-7 (+1)	0.45	12.7	12.7	5.35	6.35	**2**	5	18	11	9	2	18.5	4	1	1	1.5	TB
		9 (±2)	0.5																
		11-15 (±1.5)	0.5																
	6.3	5 (+1)	0.45	12.7	12.7	5.1	6.35	**2.5**	5	18	11	9	2	18.5	4	1	1	1.5	TC
		7 (+1)	0.5																
		9 (±2)	0.5																
		11-15 (±1.5)	0.5																

Table and example show the ammo package version. Coding RB or RC instead of TB or TC means the reel package version.

In the case of polarized capacitors, the negative lead (cathode) is in the front, i.e. in the direction of tape run.

TAPING ▪ RADIAL ALUMINUM ELECTROLYTIC CAPACITORS

T2 taping ▪ ØD 4 and 5mm ▪ wide lead space

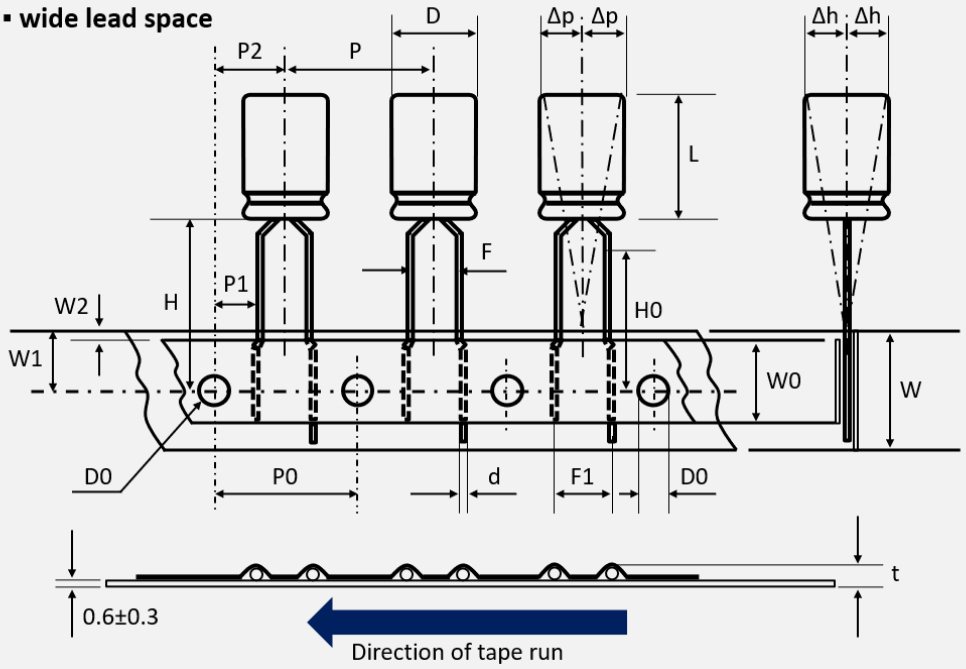

Example

S W	1 0 1	M	0 0 4	C	0 5 0	E	T C	- - - -
Series	Capacitance	Tolerance	Voltage	ØD (mm)	Height (mm)	Type code	Lead treatment	Special requirement

All dimensions in mm

	D	L	d	P	P0	P1	P2	F	F1	W	W0	W1	W2	H	D0	Δh	Δp	t	Code
Tol	±0.5	-	±0.02	±1.0	±0.2	±0.7	±1.3	+0.4 -0.2	±0.5	±0.5	±0.5	±0.5	Max	+0.75 -0.5	±0.2	Max	Max	Max	
Item	4	5-7 (+1)	0.45	12.7	12.7	5.1	6.35	**2**	5	18	11	9	2	18.5	4	1	1	1.5	TB
								2.5											TC
	5	5-7 (+1)	0.45	12.7	12.7	5.1	6.35	**2.5**	5	18	11	9	2	18.5	4	1	1	1.5	TC
		9 (±2)	0.5																
		11-15 (±1.5)	0.5																

Table and example show the ammo package version. Coding RB or RC instead of TB or TC means the reel package version.

In the case of polarized capacitors, the negative lead (cathode) is in the front, i.e. in the direction of tape run.

TAPING ▪ RADIAL ALUMINUM ELECTROLYTIC CAPACITORS

T3 taping ▪ ØD 8 to 13mm ▪ standard lead space

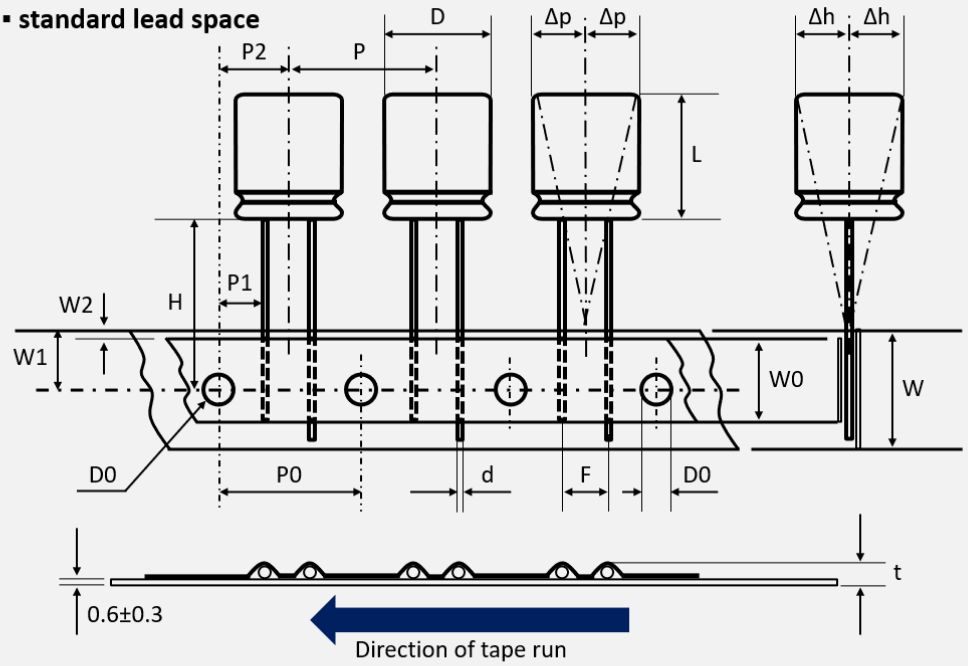

Example

G H	3 3 1	M	0 3 5	G	1 6 0	E	T A	- - - -
Series	Capacitance	Tolerance	Voltage	ØD (mm)	Height (mm)	Type code	Lead treatment	Special requirement

All dimensions in mm

	D	L	d	P	P0	P1	P2	F	W	W0	W1	W2	H	D0	Δh	Δp	t	Code
Tol	±0.5	-	±0.02	±1.0	±0.2	±0.7	±1.3	+0.4 -0.2	±0.5	±0.5	±0.5	Max	+0.75 -0.5	±0.2	Max	Max	Max	
Item	8	5 (+1)	0.45	12.7	12.7	4.6	6.35	**3.5**	18	11	9	2	18.5	4	1	1	1	TD
		7 (+1)	0.5															
		9 (±2)	0.5															
		11.5-16 (±1.5)	0.5															
		20-25 (±1.5)	0.6															
	10	7-9 (±2)	0.6	12.7	12.7	3.85	6.35	**5**	18	11	9	2	18.5	4	1	1	1.5	TA
		12.3-35 (±1.5)	0.6															
	13	13-16 (+2)	0.6	15	15	5	7.5	**5**	18	15	9	2	18.5	4	2	2	1.5	TA
		20-35 (±1.5)	0.6															

Table and example show the ammo package version. Coding RA or RD instead of TA or TD means the reel package version.

In the case of polarized capacitors, the negative lead (cathode) is in the front, i.e. in the direction of tape run.

TAPING ▪ RADIAL ALUMINUM ELECTROLYTIC CAPACITORS

T4 taping ▪ ØD 4 to 8mm ▪ lead space F = 5mm

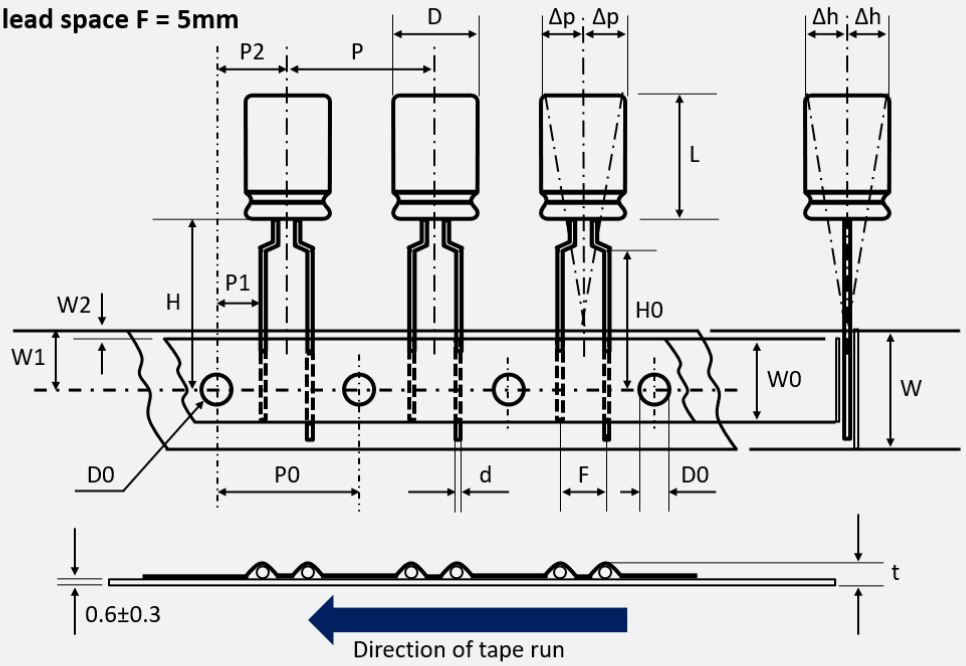

Example

G H	4 7 0	M	0 6 3	F	1 1 5	E	T A	- - - -
Series	Capacitance	Tolerance	Voltage	ØD (mm)	Height (mm)	Type code	Lead treatment	Special requirement

All dimensions in mm

	D	L	d	P	P0	P1	P2	F	W	W0	W1	W2	H	H0	D0	Δh	Δp	t	Code
Tol	±0.5	-	±0.02	±1.0	±0.2	±0.7	±1.3	+0.4 -0.2	±0.5	±0.5	±0.5	Max	+0.75 -0.5	±0.5	±0.2	Max	Max	Max	
Item	4	5-7 (+1)	0.45	12.7	12.7	3.85	6.35	5	18	11	9	2	18.5	16.5	4	1	1	1.5	TA
	5	5-7 (+1)	0.45	12.7	12.7	3.85	6.35	5	18	11	9	2	18.5	16.5	4	1	1	1.5	
		9 (±2)	0.5																
		11-15 (±1.5)	0.5																
	6.3	5 (+1)	0.45	12.7	12.7	3.85	6.35	5	18	11	9	2	18.5	16.5	4	1	1	1.5	
		7 (+1)	0.5																
		9 (±2)	0.5																
		11-15 (±1.5)	0.5																
	8	5 (+1)	0.45	12.7	12.7	3.85	6.35	5	18	11	9	2	18.5	16.5	4	1	1	1	
		7 (+1)	0.5																
		8 (+1)	0.6																
		9 (±2)	0.5																
		11.5-16 (±1.5)	0.5																
		20-25 (±1.5)	0.6																

Table and example show the ammo package version. Coding RA instead of TA means the reel package version.

In the case of polarized capacitors, the negative lead (cathode) is in the front, i.e. in the direction of tape run.

TAPING ▪ RADIAL ALUMINUM ELECTROLYTIC CAPACITORS

T5 taping ▪ ØD ≥13mm ▪ wide component space

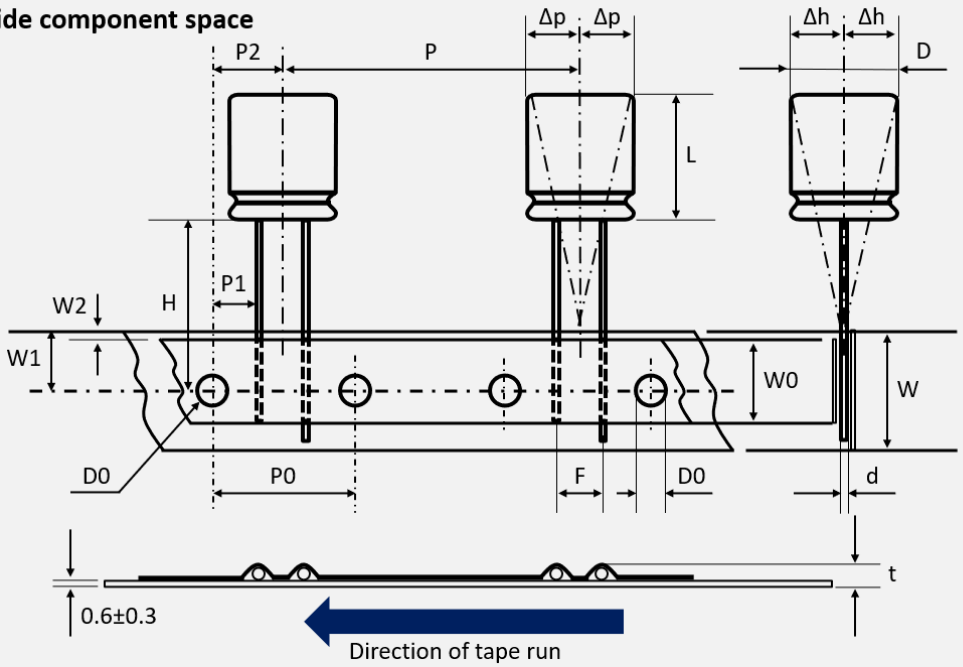

Example

K M	4 7 0	M	4 5 0	J	3 1 5	E	T E	- - - -
Series	Capacitance	Tolerance	Voltage	ØD (mm)	Height (mm)	Type code	Lead treatment	Special requirement

All dimensions in mm

	D	L	d	P	P0	P1	P2	F	W	W0	W1	W2	H	D0	Δh	Δp	t	Code
Tol	±0.5	-	±0.02	±1.0	±0.2	±0.7	±1.3	+0.4 -0.2	±0.5	±0.5	±0.5	Max	+0.75 -0.5	±0.2	Max	Max	Max	
Item	13	13-16 (+2) 20-35 (±1.5)	0.6	25.4	12.7	3.85	6.35	**5**	18	15	9	2	18.5	4	2	2	1.5	PA
	16	16-21 (±2) 25-35.5 (±1.5)	0.8	30	15	3.75	7.5	**7.5**	18	15	9	2	18.5	4	2	2	1.5	TE
	18	13-21 (±2) 25-31.5 (±1.5) 35.5 (±2)	0.8	30	15	3.75	7.5	**7.5**	18	15	9	2	18.5	4	2	2	1.5	TE

Table and example show the ammo package version. Coding RE or QA instead of TE or PA means the reel package version.

In the case of polarized capacitors, the negative lead (cathode) is in the front, i.e. in the direction of tape run.

For further information please contact sales@capxon.org

TAPING ▪ RADIAL ALUMINUM ELECTROLYTIC CAPACITORS ▪ AMMO PACK

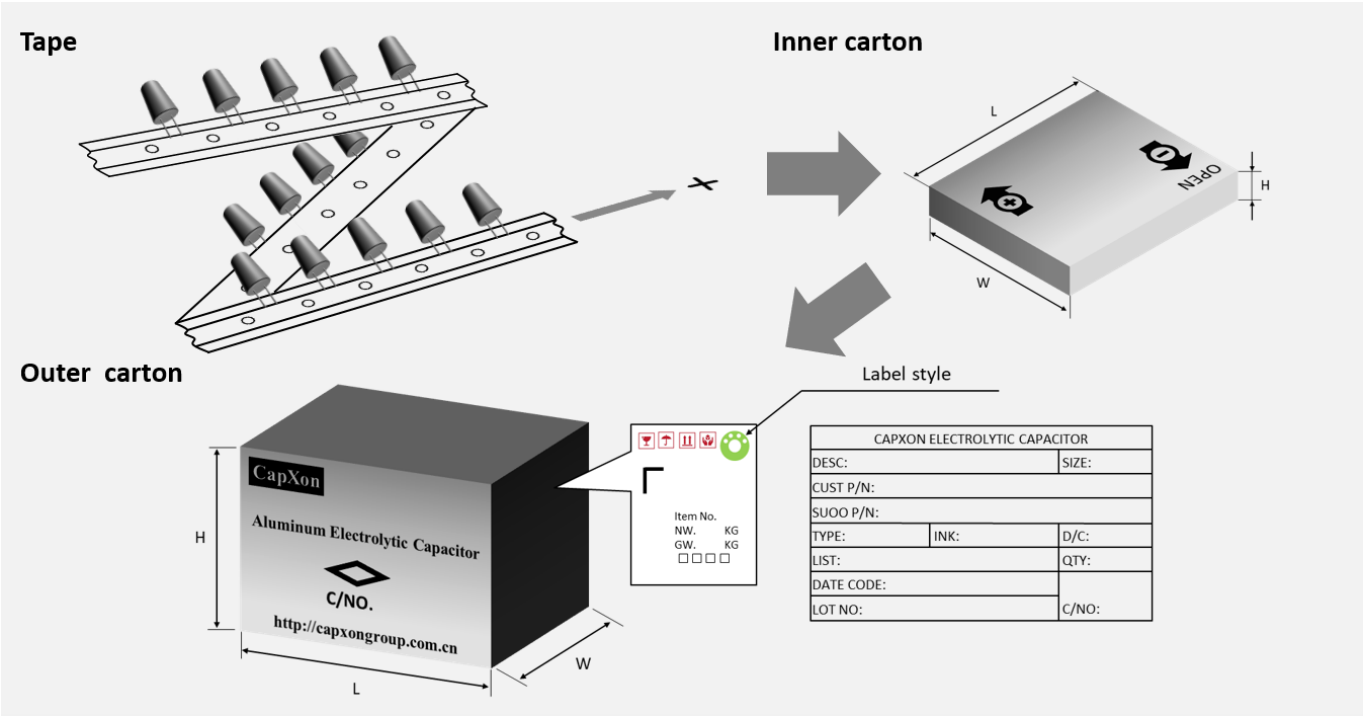

Ø D (mm)	Length L (mm)	Inner box quantity (pcs)	Inner box size L x W x H (mm)	Outer box quantity (pcs)	Outer box size L x W x H (mm)	Country of origin	Tariff number
4	All	2500	331 x 227 x 51	25000	474 x 343 x 285	China	85322200
5	All	2000	331 x 227 x 51	20000	474 x 343 x 285	China	85322200
6.3	5 to 15	1500	331 x 227 x 51	15000	474 x 343 x 285	China	85322200
	17 to 20	1300	327 x 191 x 57	13000	403 x 343 x 312	China	85322200
8	5 to 20	800	327 x 191 x 57	8000	403 x 343 x 312	China	85322200
	25 to 30	800	332 x 216 x 64	6400	474 x 343 x 285	China	85322200
10	7 to 15	600	331 x 227 x 51	6000	474 x 343 x 285	China	85322200
	16 to 20	500	327 x 191 x 57	5000	403 x 343 x 312	China	85322200
	21 to 25	500	332 x 190 x 60	2500	351 x 208 x 334	China	85322200
	26 to 30	500	332 x 216 x 64	4000	474 x 343 x 285	China	85322200
	35	500	318 x 254 x 70	2500	330 x 278 x 380	China	85322200
12.5	13 to 25	300	327 x 191 x 57	3000	403 x 343 x 312	China	85322200
	26 to 30	300	332 x 216 x 64	2400	474 x 343 x 285	China	85322200
	35	400	318 x 254 x 70	2000	330 x 278 x 380	China	85322200
13	13 to 25	300	327 x 191 x 57	3000	403 x 343 x 312	China	85322200
	26 to 30	300	332 x 216 x 64	2400	474 x 343 x 285	China	85322200
	35	400	318 x 254 x 70	2000	330 x 278 x 380	China	85322200
16	16 to 25	200	318 x 254 x 67	2000	528 x 331 x 281	China	85322200
	> 25	250	310 x 260 x 71	1250	330 x 278 x 380	China	85322200
18	16 to 25	200	310 x 260 x 61	1000	330 x 278 x 333	China	85322200
	> 25	200	310 x 260 x 71	1000	330 x 278 x 380	China	85322200

TAPING ▪ RADIAL ALUMINUM ELECTROLYTIC CAPACITORS ▪ REEL PACK

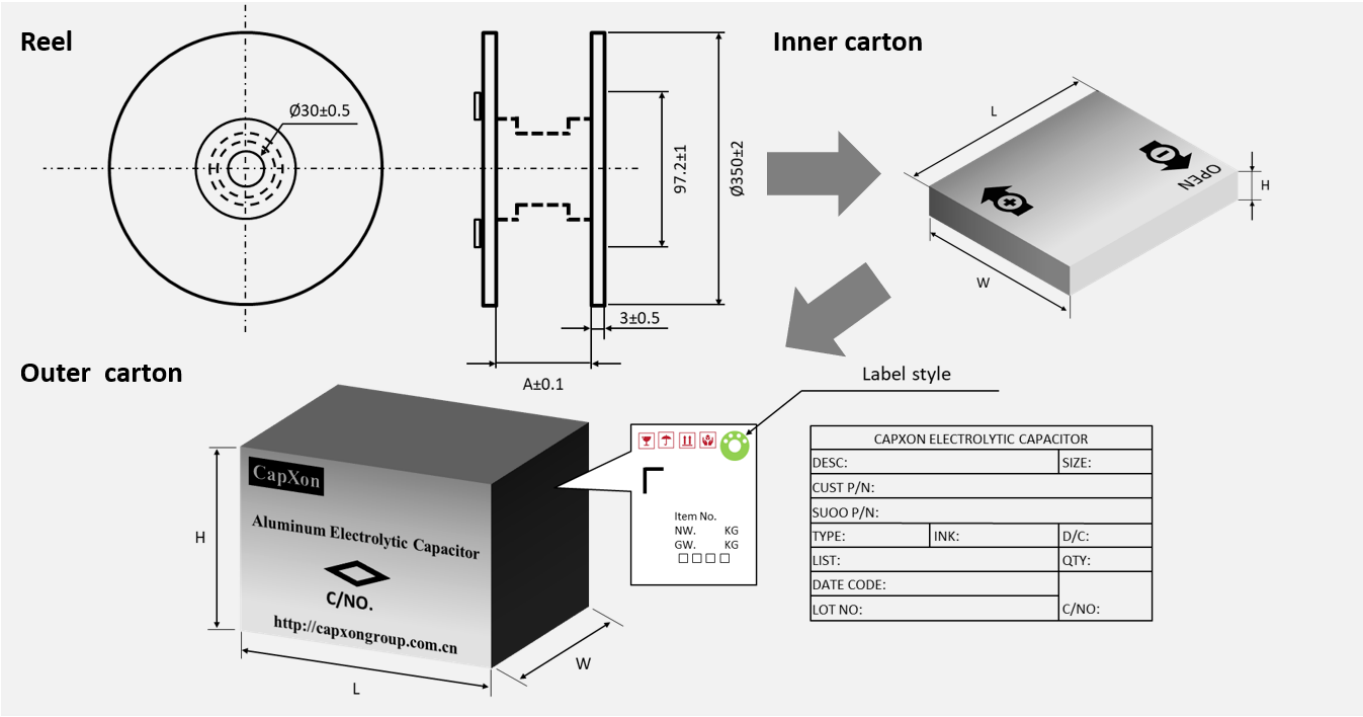

Ø D (mm)	Length L (mm)	A (mm)	Inner box quantity (pcs)	Inner box size L x W x H (mm)	Outer box quantity (pcs)	Outer box size L x W x H (mm)	Country of origin	Tariff number
4	All	45	1800	350 x 350 x 105	10800	375 x 375 x 343	China	85322200
5	All	45	1300	350 x 350 x 105	7800	375 x 375 x 343	China	85322200
6.3	All	45	1000	350 x 350 x 105	6000	375 x 375 x 343	China	85322200
8	5 to 17	45	800	350 x 350 x 105	4800	375 x 375 x 343	China	85322200
	18 to 28	55	800	349 x 349 x 121	4800	375 x 375 x 385	China	85322200
10	7 to 17	45	600	350 x 350 x 105	3600	375 x 375 x 343	China	85322200
	18 to 28	55	600	349 x 349 x 121	3600	375 x 375 x 385	China	85322200
12.5	17	45	400	350 x 350 x 105	2400	375 x 375 x 343	China	85322200
	18 to 28	55	400	349 x 349 x 121	2400	375 x 375 x 385	China	85322200
13	13 to 17	45	300	350 x 350 x 105	1800	375 x 375 x 343	China	85322200
	18 to 28	55	300	349 x 349 x 121	1800	375 x 375 x 385	China	85322200
16	13 to 17	45	200	350 x 350 x 105	1200	375 x 375 x 343	China	85322200
	18 to 28	55	200	349 x 349 x 121	1200	375 x 375 x 385	China	85322200

For further information please contact sales@capxon.org

PACKAGING ▪ RADIAL ALUMINUM ELECTROLYTIC CAPACITORS
STRAIGHT LEADS ▪ BULK PACK

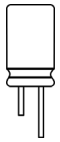

Ø D (mm)	Length L (mm)	Inner bag / Inner row (pcs)	Inner box quantity (pcs)	Inner box size L x W x H (mm)	Outer box quantity (pcs)	Outer box size L x W x H (mm)	Country of origin	Tariff number
3	5	1000/bag	20000	293 x 181 x 223	60000	562 x 318 x 238	China	85322200
4	5 to 7	1000/bag	15000	293 x 181 x 223	45000	562 x 318 x 238	China	85322200
5	5 to 9	1000/bag	15000	293 x 181 x 223	45000	562 x 318 x 238	China	85322200
	11 to 12	1000/bag	10000	293 x 181 x 223	30000	562 x 318 x 238	China	85322200
6.3	5 to 9	1000/bag	10000	293 x 181 x 223	30000	562 x 318 x 238	China	85322200
	11 to 20	1000/bag	8000	293 x 181 x 223	24000	562 x 318 x 238	China	85322200
8	5 to 9	500/bag	6000	293 x 181 x 223	18000	562 x 318 x 238	China	85322200
	11 to 14	500/bag	5000	293 x 181 x 223	15000	562 x 318 x 238	China	85322200
	15 to 16	500/bag	4000	293 x 181 x 223	12000	562 x 318 x 238	China	85322200
	20	500/bag	3000	293 x 181 x 223	9000	562 x 318 x 238	China	85322200
	25 to 30	400/bag	2400	293 x 181 x 223	7200	562 x 318 x 238	China	85322200
	30 to 34	40/line	840	334 x 217 x 68	6720	448 x 354 x 295	China	85322200
	35 to 41	40/line	840	334 x 217 x 79.5	5040	448 x 354 x 248	China	85322200
	42 to 51	40/line	840	334 x 217 x 92	5040	448 x 354 x 295	China	85322200
	52 to 60	40/line	840	334 x 217 x 92	5040	448 x 354 x 295	China	85322200
10	≤ 13	500/bag	4000	293 x 181 x 223	12000	562 x 318 x 238	China	85322200
	14 to 17	500/bag	3000	293 x 181 x 223	9000	562 x 318 x 238	China	85322200
	20	500/bag	2500	293 x 181 x 223	7500	562 x 318 x 238	China	85322200
	24 to 25	400/bag	2000	293 x 181 x 223	6000	562 x 318 x 238	China	85322200
	30 to 34	32/line	544	334 x 217 x 68	4352	448 x 354 x 295	China	85322200
	35 to 41	32/line	544	334 x 217 x 79.5	3264	448 x 354 x 248	China	85322200
	42 to 51	32/line	544	334 x 217 x 92	3264	448 x 354 x 295	China	85322200
	55 to 60	32/line	544	334 x 217 x 92	3264	448 x 354 x 295	China	85322200
12.5	≤ 21	300/bag	1500	293 x 181 x 223	4500	562 x 318 x 238	China	85322200
	25	200/bag	1200	293 x 181 x 223	3600	562 x 318 x 238	China	85322200
	30	200/bag	1000	293 x 181 x 223	3000	562 x 318 x 238	China	85322200
	35	26/line	364	334 x 217 x 79.5	3184	448 x 354 x 248	China	85322200
	40 to 50	26/line	364	334 x 217 x 92	2184	448 x 354 x 295	China	85322200
13	≤ 21	300/bag	1500	293 x 181 x 223	4500	562 x 318 x 238	China	85322200
	25 to 31.5	25/line	350	334 x 217 x 68	2800	448 x 354 x 295	China	85322200
	35.5 to 41	25/line	350	334 x 217 x 79.5	2100	448 x 354 x 248	China	85322200
	42 to 51	25/line	350	334 x 217 x 92	2100	448 x 354 x 295	China	85322200
	55 to 60	25/line	350	334 x 217 x 92	2100	448 x 354 x 295	China	85322200
14.5	31.5 to 32	20/line	220	304 x 196 x 68	1760	415 x 320 x 295	China	85322200
	37	20/line	220	305 x 197 x 79.5	1320	415 x 320 x 295	China	85322200
16	16 to 17	18/line	180	304 x 196 x 55	1800	415 x 320 x 295	China	85322200
	20 to 26	18/line	180	304 x 196 x 68	1440	415 x 320 x 295	China	85322200
	30 to 35.5	18/line	180	305 x 197 x 79.5	1080	415 x 320 x 248	China	85322200
	40 to 50	18/line	180	304 x 196 x 92	1080	415 x 320 x 295	China	85322200
18	15 to 17	32 in all/2 lines	160	304 x 196 x 55	1600	415 x 320 x 295	China	85322200
	20 to 31.5	32 in all/2 lines	160	304 x 196 x 68	1280	415 x 320 x 295	China	85322200
	35	32 in all/2 lines	160	305 x 197 x 79.5	960	415 x 320 x 248	China	85322200
	40 to 51	32 in all/2 lines	160	304 x 196 x 92	960	415 x 320 x 295	China	85322200
20	21 to 31.5	32 in all/2 lines	160	334 x 217 x 68	1280	448 x 354 x 295	China	85322200
	35 to 36	32 in all/2 lines	160	334 x 217 x 79.5	960	448 x 354 x 248	China	85322200
	42 to 51	32 in all/2 lines	160	334 x 217 x 92	960	448 x 354 x 295	China	85322200

For further information please contact sales@capxon.org

PACKAGING ▪ RADIAL ALUMINUM ELECTROLYTIC CAPACITORS
STRAIGHT LEADS ▪ BULK PACK

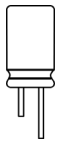

Ø D (mm)	Length L (mm)	Inner bag / Inner row (pcs)	Inner box quantity (pcs)	Inner box size L x W x H (mm)	Outer box quantity (pcs)	Outer box size L x W x H (mm)	Country of origin	Tariff number
22	21 to 26	25 in all/2 lines	100	304 x 196 x 68	800	415 x 320 x 295	China	85322200
	30 to 36	25 in all/2 lines	100	305 x 197 x 79.5	600	415 x 320 x 248	China	85322200
	41 to 46	25 in all/2 lines	100	304 x 196 x 92	600	415 x 320 x 295	China	85322200
	47 to 70	25 in all/2 lines	100	304 x 196 x 92	600	415 x 320 x 295	China	85322200
25	21 to 26	25 in all/2 lines	100	334 x 217 x 68	800	448 x 354 x 295	China	85322200
	30	25 in all/2 lines	100	334 x 217 x 79.5	600	448 x 354 x 260	China	85322200
	≥ 41	25 in all/2 lines	100	334 x 217 x 92	600	448 x 354 x 295	China	85322200

PACKAGING ▪ RADIAL ALUMINUM ELECTROLYTIC CAPACITORS
CUTTED LEADS ▪ BULK PACK

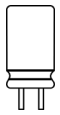

Ø D (mm)	Length L (mm)	Inner bag / Inner row (pcs)	Inner box quantity (pcs)	Cutting height (mm)	Outer box quantity (pcs)	Outer carton quantity (pcs)	Country of origin	Tariff number
3	All L	2500/bag	10000	N/A	6	60000	China	85322200
4	5 to 7	2000/bag	8000	N/A	5	40000	China	85322200
5	5 to 7	2000/bag	8000	N/A	5	40000	China	85322200
	11 to 12	1000/bag	6000	C < 7	5	30000	China	85322200
	11 to 12	1000/bag	4000	C ≥ 7	5	20000	China	85322200
6.3	5 to 7	1000/bag	6000	N/A	5	30000	China	85322200
	9 to 12	1000/bag	4000	N/A	5	20000	China	85322200
	15 to 20	1000/bag	4000	N/A	6	24000	China	85322200
8	≤ 9	500/bag	4000	N/A	6	24000	China	85322200
	11 to 13	500/bag	3000	C < 7	6	18000	China	85322200
	14	500/bag	2500	C < 7	6	15000	China	85322200
	15 to 16	500/bag	2000	C < 7	6	12000	China	85322200
	20	500/bag	1000	C < 7	12	12000	China	85322200
	30 to 35.5	500/bag	1000	C < 7	8	8000	China	85322200
	36 to 41	40/line	840	C < 7	10	8400	China	85322200
	42 to 51	40/line	840	C < 7	6	5040	China	85322200
	52 to 60	40/line	840	C < 7	6	5040	China	85322200
10	7 to 10	500/bag	1000	C < 7	12	12000	China	85322200
	12 to 17	500/bag	1000	C < 7	10	10000	China	85322200
	20	500/bag	1000	C < 7	8	8000	China	85322200
	24 to 25	500/bag	1000	C < 7	6	6000	China	85322200
	30 to 35.5	32/line	1000	C < 7	12	6480	China	85322200
	36 to 41	32/line	540	C < 7	10	5400	China	85322200
	42 to 51	32/line	540	C < 7	6	3240	China	85322200
	52 to 60	32/line	540	C < 7	6	3240	China	85322200
13	31 to 35.5	25/line	350	C < 7	6	2100	China	85322200
	36 to 41	25/line	350	C < 7	5	1750	China	85322200
	42 to 51	25/line	350	C < 7	4	1400	China	85322200
	52 to 60	25/line	350	C < 7	4	1400	China	85322200
	35 to 40	25/line	350	C ≥ 12	4	1400	China	85322200
16	16 to 32	18/line	180	C < 7	6	1080	China	85322200
	35 to 41	18/line	180	C < 7	5	900	China	85322200
	21 to 24	18/line	180	C ≥ 7	6	1080	China	85322200
	25 to 30	18/line	180	C ≥ 7	5	900	China	85322200
	31 to 41	18/line	180	C ≥ 7	4	720	China	85322200
18	15 to 21	32 in all/2 lines	160	N/A	6	960	China	85322200
	25 to 31.5	32 in all/2 lines	160	C < 7	6	960	China	85322200
	25 to 31.5	32 in all/2 lines	160	C ≥ 7	5	800	China	85322200
	35.5 to 41	32 in all/2 lines	160	C < 7	5	800	China	85322200
	35.5 to 41	32 in all/2 lines	160	C ≥ 7	4	640	China	85322200
	≥ 45	32 in all/2 lines	160	N/A	4	640	China	85322200
20	25 to 40	30 in all/2 lines	150	C < 7	5	750	China	85322200
	25 to 40	30 in all/2 lines	150	C ≥ 7	4	600	China	85322200
	≥ 41	30 in all/2 lines	150	C < 7	4	600	China	85322200
	≥ 41	30 in all/2 lines	150	C ≥ 7	3	450	China	85322200

For further information please contact sales@capxon.org

PACKAGING ▪ RADIAL ALUMINUM ELECTROLYTIC CAPACITORS
CUTTED LEADS ▪ BULK PACK

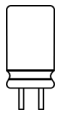

Ø D (mm)	Length L (mm)	Inner bag / Inner row (pcs)	Inner box quantity (pcs)	Cutting height (mm)	Outer box quantity (pcs)	Outer carton quantity (pcs)	Country of origin	Tariff number
22	21 to 31	25 in all/2 lines	100	C < 7	6	600	China	85322200
	21 to 31	25 in all/2 lines	100	C ≥ 7	5	500	China	85322200
	36 to 41	25 in all/2 lines	100	C < 7	5	500	China	85322200
	36 to 41	25 in all/2 lines	100	C ≥ 7	6	600	China	85322200
	46 to 51	25 in all/2 lines	100	C < 7	4	400	China	85322200
	46 to 51	25 in all/2 lines	100	C ≥ 7	3	300	China	85322200
	≥ 56	25 in all/2 lines	100	C < 7	3	300	China	85322200
25	21 to 26	25 in all/2 lines	100	N/A	6	600	China	85322200
	30 to 37	25 in all/2 lines	100	N/A	5	500	China	85322200
	40 to 51	25 in all/2 lines	100	N/A	4	400	China	85322200
	≥ 52	25 in all/2 lines	100	N/A	3	300	China	85322200

AVAILABLE LEAD TREATMENTS ▪ RADIAL ALUMINUM ELECTROLYTIC CAPACITORS

Radial type ▪ standard version ▪ standard lead spacing (all dimension in mm)

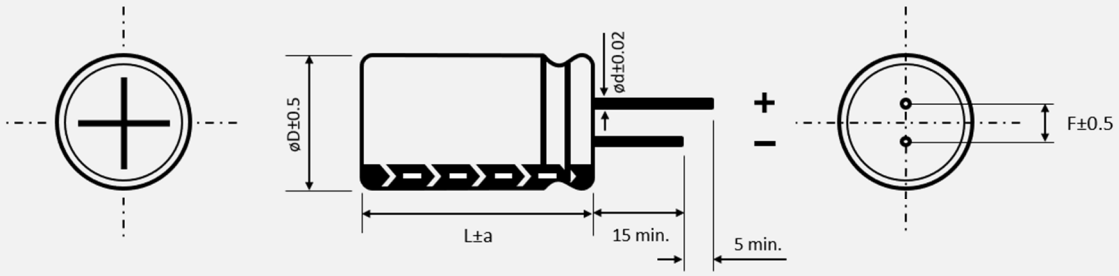

Ø D (mm)	4	5		6.3		8				10	13	16		18		22	25
F (mm)	1.5	2		2.5		3.5				5		7.5		7.5		10	12.5
L (mm)	All	≤ 7	> 7	≤ 5	> 5	≤ 5	7	9 to < 20	≥ 20	All		25 to 35.5	< 25 & ≥ 40	25 to 31.5	< 25 & ≥ 35	All	All
Ø d (mm)	0.45	0.45	0.5	0.45	0.5	0.45	0.5		0.6	0.6		0.8		0.8		0.8	1
a (mm)	1	1		1		1	1	1.5	1.5	1.5		1.5	2	1.5	2	2	

Radial type ▪ CA version ▪ cutted leads ▪ standard lead spacing

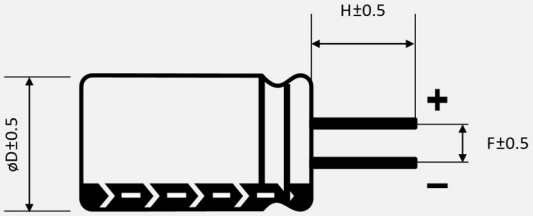

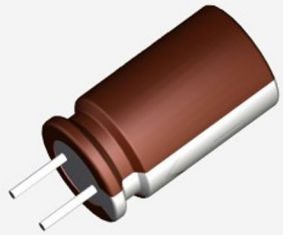

Example

Length „H" customized. See product code table
customized lead length for further reference.

ØD (mm)	4	5	6.3	8	10	13	16	18	22	25
F (mm)	1.5	2	2.5	3.5	5	5	7.5	7.5	10	12.5

F H	2 2 1	M	6 R 3	E	1 1 0	E	C A	- - - -
Series	Capacitance	Tolerance	Voltage	ØD (mm)	Height (mm)	Type code	Lead treatment	Special requirement

Radial type ▪ CE version ▪ cutted leads ▪ wide lead spacing ≤ 2.5mm

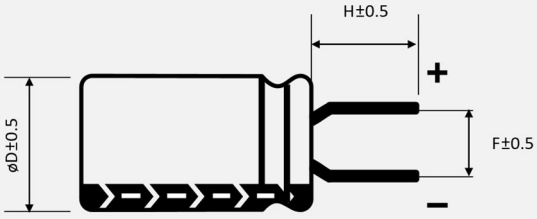



Example

Length „H" customized. See product code table
customized lead length for further reference.

ØD (mm)	4	4
F (mm)	2	2.5

S A	2 R 2	M	0 5 0	B	0 5 0	E	C E	- - - -
Series	Capacitance	Tolerance	Voltage	ØD (mm)	Height (mm)	Type code	Lead treatment	Special requirement

For further information please contact sales@capxon.org

AVAILABLE LEAD TREATMENTS ▪ RADIAL ALUMINUM ELECTROLYTIC CAPACITORS

Radial type ▪ CF version ▪ cutted leads ▪ wide lead spacing ≥ 2.5mm

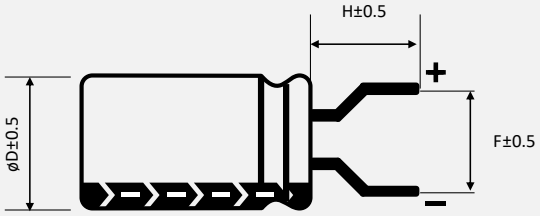

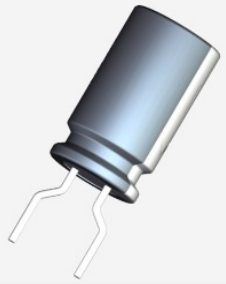

Length „H" customized. See product code table customized lead length for further reference.

ØD (mm)	4	4	4	5	5	6.3	6.3	8	10	13
F (mm)	2.5	3.5	5	3.5	5	3.5	5	5	7.5	7.5

Example

G H	1 2 1	M	0 1 6	E	1 1 0	E	C F	- - - -
Series	Capacitance	Tolerance	Voltage	ØD (mm)	Height (mm)	Type code	Lead treatment	Special requirement

Radial type ▪ FB / FC / FD version ▪ wide lead spacing ≤ 3.5mm ▪ long anode

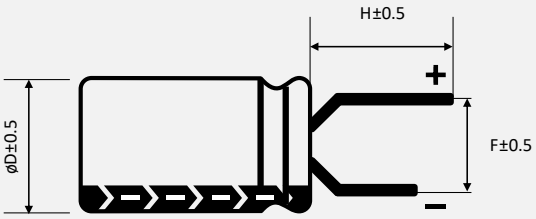

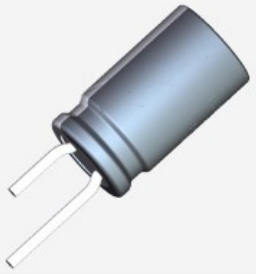

Length „H" customized. See product code table customized lead length for further reference.

ØD (mm)	4	5	6.3
F (mm)	2	2.5	3.5
Code	FB	FC	FD

Example

S G	R 3 3	M	0 5 0	B	0 7 0	E	F B	- - - -
Series	Capacitance	Tolerance	Voltage	ØD (mm)	Height (mm)	Type code	Lead treatment	Special requirement

Radial type ▪ FA / FE version ▪ wide lead spacing ≥ 5mm ▪ long anode

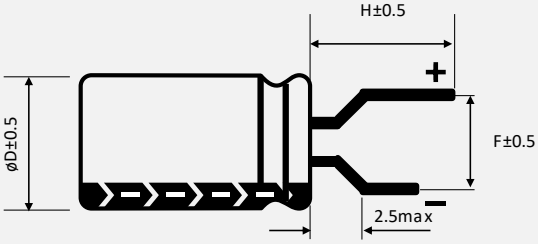

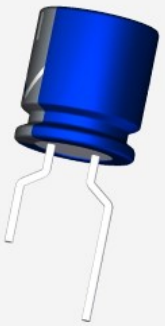

Length „H" customized. See product code table customized lead length for further reference.

ØD (mm)	4	5	6.3	8	10	13
F (mm)	5	5	5	5	7.5	7.5
Code	FA	FA	FA	FA	FE	FE

Example

S M	2 2 1	M	0 1 0	E	0 7 0	E	F A	- - - -
Series	Capacitance	Tolerance	Voltage	ØD (mm)	Height (mm)	Type code	Lead treatment	Special requirement

AVAILABLE LEAD TREATMENTS ▪ RADIAL ALUMINUM ELECTROLYTIC CAPACITORS

Radial type ▪ KA version ▪ kinked anode and cathode ▪ standard lead s

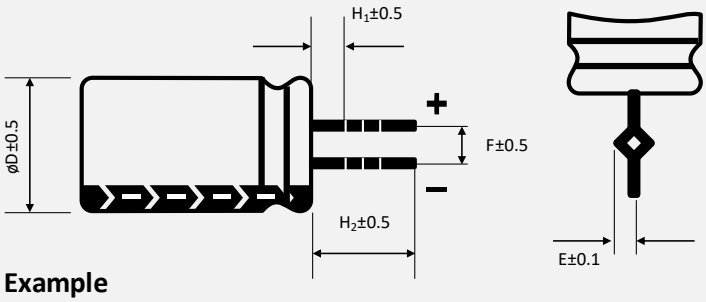

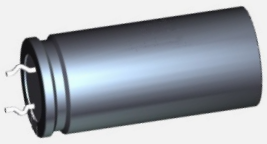

ØD (mm)	5	6.3	8	10	13	16	18	22
F (mm)	2	2.5	3.5	5	5	7.5	7.5	10
H_1 (mm)	4	4	4	4.5	4.5	4.5	4.5	4.5
H_2 (mm)	1.8	1.8	1.8	1.8	1.8	1.8	1.8	1.8
E (mm)	1.12	1.12	1.32	1.32	1.32	1.32	1.32	1.82

Example

T E	2 2 2	M	0 2 5	J	3 5 5	E	
Series	Capacitance	Tolerance	Voltage	ØD (mm)	Height (mm)	Type code	Lea

Radial type ▪ KE version ▪ kinked anode and cathode ▪ wide lead spacing ≤ 2.5mm

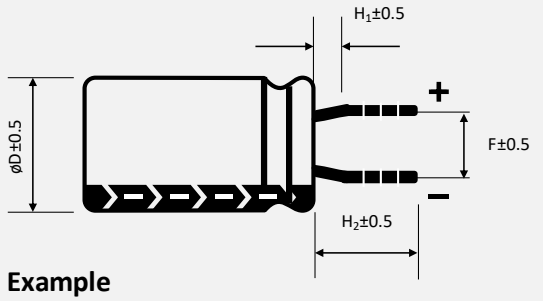



ØD (mm)	4	5
F (mm)	2	2.5
H_1 (mm)	1.8	1.8
H_2 (mm)	4	4
E (mm)	1.12	1.12

Example

G W	1 5 1	M	6 R 3	C	0 9 0	E	K E	- - - -
Series	Capacitance	Tolerance	Voltage	ØD (mm)	Height (mm)	Type code	Lead treatment	Special requirement

Radial type ▪ KF version ▪ kinked anode and cathode ▪ wide lead spacing 5mm

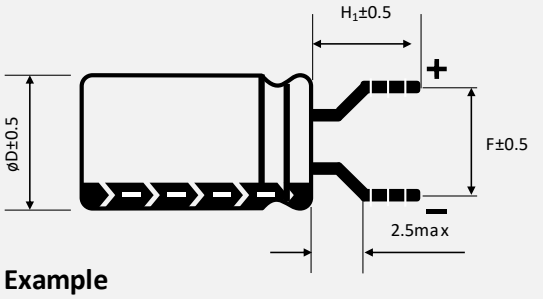



ØD (mm)	5	6.3	8
F (mm)	5	5	5
H_1 (mm)	4	4	4
E (mm)	1.12	1.12	1.32

Example

T H	2 2 1	M	0 2 5	F	1 1 5	E	K F	- - - -
Series	Capacitance	Tolerance	Voltage	ØD (mm)	Height (mm)	Type code	Lead treatment	Special requirement

For further information please contact sales@capxon.org

AVAILABLE LEAD TREATMENTS ▪ RADIAL ALUMINUM ELECTROLYTIC CAPACITORS

Radial type ▪ CK version ▪ kinked anode

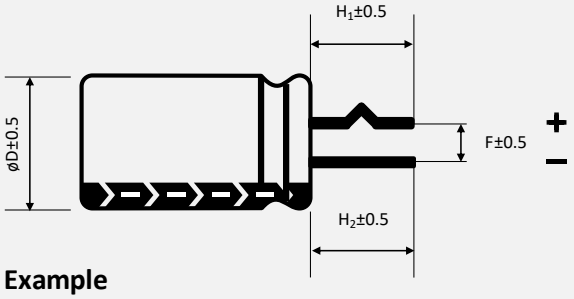

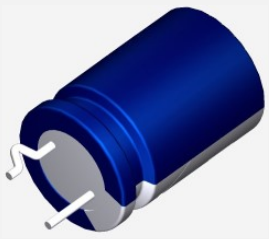

ØD (mm)	4	5	6.3	8	10	13	16	18
F (mm)	1.5	2	2.5	3.5	5	5	7.5	7.5
H_1 (mm)	4	4	4	4	4.5	4.5	4.5	4.5
H_2 (mm)	4	4	4	4	4.5	4.5	4.5	4.5

Example

G S	4 7 1	M	0 2 5	F	1 1 5	E	C K	- - - -
Series	Capacitance	Tolerance	Voltage	ØD (mm)	Height (mm)	Type code	Lead treatment	Special requirement

Radial type ▪ EF version ▪ double kinked anode and cathode ▪ lead spacing 5mm

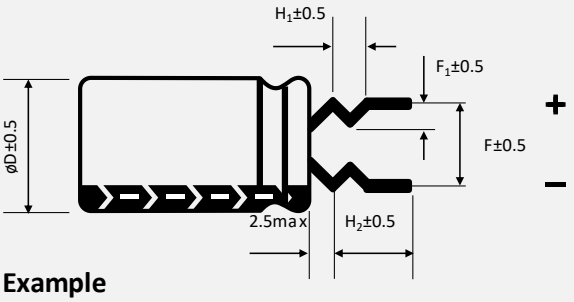

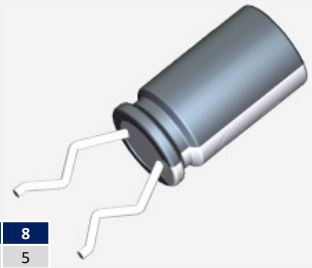

ØD (mm)	4	5	6.3	8
F (mm)	5	5	5	5
H_1 (mm)	1.8	1.8	1.8	1.8
H_2 (mm)	4	4	4	4
F_1 (mm)	1.2	1.2	1.2	1.2

Example

K W	1 0 0	M	0 6 3	C	0 9 0	E	E F	- - - -
Series	Capacitance	Tolerance	Voltage	ØD (mm)	Height (mm)	Type code	Lead treatment	Special requirement

Radial type ▪ CR version ▪ L - bended leads ▪ cathode right

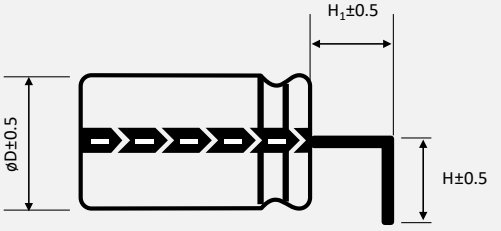

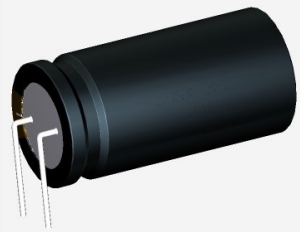

ØD (mm)	4	5	6.3	8	10	13	16	18	22	25
F (mm)	1.5	2	2.5	3.5	5	5	7.5	7.5	10	12.5
H_1 (mm)	2.5	2.5	2.5	2.5	2.5	2.5	2.5	2.5	2.5	2.5

Example

Length „H“ customized. See product code table customized lead length for further reference.

F K	1 0 1	M	4 5 0	K	3 5 5	E	C R	- - - -
Series	Capacitance	Tolerance	Voltage	ØD (mm)	Height (mm)	Type code	Lead treatment	Special requirement

For further information please contact sales@capxon.org

AVAILABLE LEAD TREATMENTS ▪ RADIAL ALUMINUM ELECTROLYTIC CAPACITORS

Radial type ▪ CL version ▪ L - bended leads ▪ cathode left

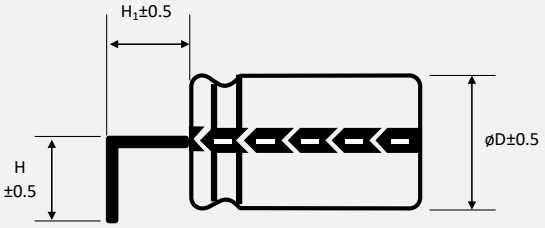

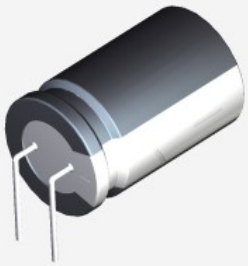

ØD (mm)	4	5	6.3	8	10	13	16	18	22	25
F (mm)	1.5	2	2.5	3.5	5	5	7.5	7.5	10	12.5
H_1 (mm)	2.5	2.5	2.5	2.5	2.5	2.5	2.5	2.5	2.5	2.5

Example

Length „H" customized. See product code table customized lead length for further reference.

K S	2 2 0	M	4 0 0	I	2 0 0	E	C L	- - - -
Series	Capacitance	Tolerance	Voltage	ØD (mm)	Height (mm)	Type code	Lead treatment	Special requirement

Radial type ▪ CS version ▪ SMD - bended leads ▪ cathode left

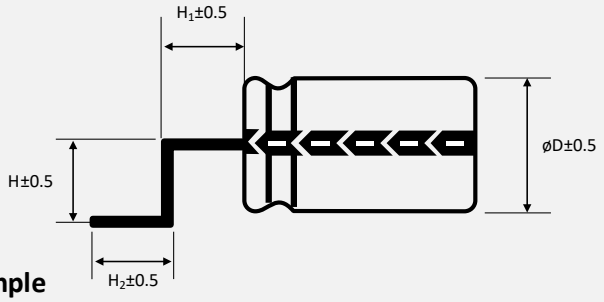



Length „H", „H_1" and „H_2" customized
Ask CapXon for further assistance

ØD (mm)	4	5	6.3	8	10	13	16	18	22	25
F (mm)	1.5	2	2.5	3.5	5	5	7.5	7.5	10	12.5

Example

F K	3 R 3	M	4 5 0	G	0 9 0	E	C S	- - - -
Series	Capacitance	Tolerance	Voltage	ØD (mm)	Height (mm)	Type code	Lead treatment	Special requirement

Radial type ▪ CZ version ▪ SMD - bended leads ▪ cathode right

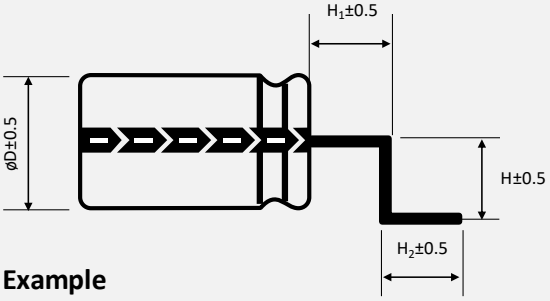

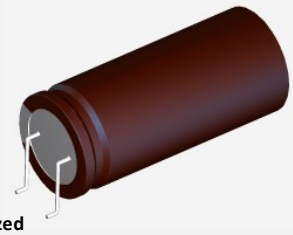

Length „H", „H_1" and „H_2" customized
Ask CapXon for further assistance

ØD (mm)	4	5	6.3	8	10	13	16	18	22	25
F (mm)	1.5	2	2.5	3.5	5	5	7.5	7.5	10	12.5

Example

R W	4 7 2	M	0 6 3	M	5 0 0	E	C Z	- - - -
Series	Capacitance	Tolerance	Voltage	ØD (mm)	Height (mm)	Type code	Lead treatment	Special requirement

For further information please contact sales@capxon.org

AVAILABLE LEAD TREATMENTS ▪ RADIAL ALUMINUM ELECTROLYTIC CAPACITORS

Radial type ▪ JI version ▪ polarity protected footprint ▪ cathode bended

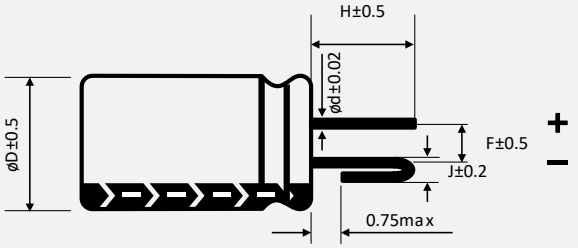

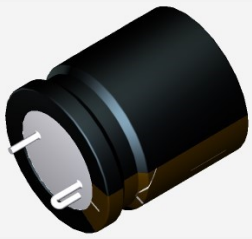

ØD (mm)	10	12.5	13	16	18	22
F (mm)	5	5	5	7.5	7.5	10
J (mm)	1.5	1.5	1.5	1.9	1.9	1.9
Ød (mm)	0.6	0.6	0.6	0.8	0.8	0.8

Length „H“ customized. See product code table customized lead length for further reference.

Example

F L	4 7 0	M	4 0 0	K	2 0 0	E	J I	- - - -
Series	Capacitance	Tolerance	Voltage	ØD (mm)	Height (mm)	Type code	Lead treatment	Special requirement

Radial type ▪ CD version ▪ polarity protected footprint ▪ anode pressed

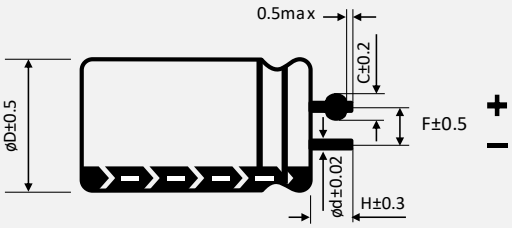



ØD (mm)	10	12.5	13	16	18	22
F (mm)	5	5	5	7.5	7.5	10
C (mm)	1.1	1.1	1.1	1.4	1.4	1.4
Ød (mm)	0.6	0.6	0.6	0.8	0.8	0.8

Length „H“ customized. See product code table customized lead length for further reference.

Example

G L	2 2 1	M	0 5 0	G	1 6 0	E	C D	- - - -
Series	Capacitance	Tolerance	Voltage	ØD (mm)	Height (mm)	Type code	Lead treatment	Special requirement

PRODUCT CODE TABLE ▪ CUSTOMIZED LEAD LENGTH

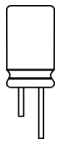

THT type example:
SA series ▪ 2.2µF ▪ 50V ▪ ±20% ▪ Ø 4mm ▪ L 5mm ▪ CE version, wide lead spacing ▪ P 2.5mm ▪ H 4.5mm
▪ Non-Automotive

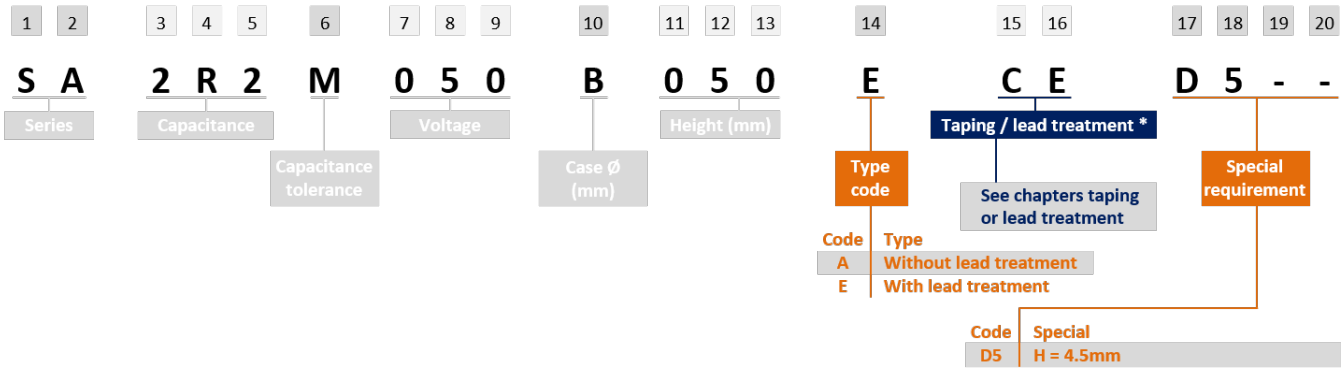

Product code 17th digit	H (mm)
A	1
B	2
C	3
D	4
E	5
F	6
G	7
H	8
I	9
J	10
K	11
L	12
M	13
N	14
O	15
P	16
Q	17
R	18
S	19
T	20
U	21
V	22
W	23
X	24
Y	25
Z	26

Product code 18st digit	H (mm)
0	0.0
1	0.1
2	0.2
3	0.3
4	0.4
5	0.5
6	0.6
7	0.7
8	0.8
9	0.9

Example H (mm)	Product code Non-Automotive
4.5	D5
6.0	F0
10.7	J7
16.5	P5

Example H (mm)	Product code Automotive
4.5	XD5
6.0	XF0
10.7	XX7
16.5	XP5

The 17th digit is according basic ordering of the Latin alphabet and shows the measure "H" in front of the decimal separator. The 18th digit follows the numbering from 0 to 9 and shows the measure "H" after the decimal separator.

Remark for Automotive version: In the case of an AEC-Q200 qualified component, the measure "H" in front of the decimal separator moves to the 18th digit and the measure "H" after the decimal separator to the 19th digit.

For further information please contact sales@capxon.org

Aluminum Electrolytic Capacitors

Snap In Types



OVERVIEW ▪ SNAP-IN ALUMINUM ELECTROLYTIC CAPACITORS

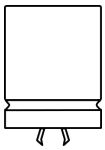

Features



Series	Page	AEC-Q200	High Reliability	High Temperature	Low ESR	Long Life	Multi Pin	Photo Flash	Standard	Ultra Long Life	Vibration Proof	Temperature Range (°C)		Voltage Range (V)		Capacitance Range (µF)		Endurance (hours)	Useful Life (hours)
SF	358							●				-20	+55	330	350	150	1500	5000 times	
LR	360						●		●			-40	+85	16	100	68	33000	2000	-
LP	374						●		●			-40 -25	+85	6.3 385	350 600	100 22	1mF 2700	2000	3000 to 5000
LT	396						●					-40 -25	+85	16 385	350 500	390 220	82000 2700	2000	3000 to 5000
UB	403		●			●	●					-40 -25	+85	200 500	450	68 100	3300 1500	2000	5000
LU	412					●	●					-40 -25	+85	10 400	350 600	82 47	82000 1500	3000	4000 to 7000
UC	433		●			●	●					-40 -25	+85	200 500	450 630	68 56	6800 1500	3000	7000
LD	445				●		●			●		-40 -25	+85	10 400	350 500	82 47	1mF 1800	5000	7000 to 10000
UD	463		●		●		●			●		-40 -25	+85	200 500	450 600	68 47	2700 680	5000	10000
HP	472						●		●			-40 -25	+105	6.3 400	350 550	68 47	1mF 1200	2000	3000 to 5000
HT	494						●					-40	+105	160	350	180	2700	2000	> 5000
UJ	500	●	●			●	●					-40 -25	+105	200 500	450 550	82 47	3300 1000	2000	5000
HU	509					●	●					-40 -25	+105	10 385	350 500	56 33	82000 1200	3000	5000 to 8000
UK	529	●	●				●			●		-40 -25	+105	200 500	450 550	68 47	2200 680	3000	8000
HL	539				●		●			●		-40 -25	+105	10 385	350 500	39 39	56000 1200	5000	7000 to 10000
UL	558	●	●		●		●			●		-40 -25	+105	200 500	450 550	82 47	2700 680	5000	10000
HC	571	●	●	●	●		●			●	●	-55	+125	25	63	600	3300	3000	4000
HH	575	●	●	●			●			●		-40	+125	400	450	47	560	3000	4000

For further information please contact sales@capxon.org

SF SERIES ▪ PULSE & PHOTO-FLASH TYPE



KEY FEATURES

PHOTO FLASH

- **ALUMINUM ELECTROLYTIC CAPACITOR** ▪ Snap-In type
- Small dimensions and low leakage current
- Optimized material combination to achieve low ESR and low dissipation factor
- Especially for impulse applications as photo flash generators, intense pulse light hair removers, laser power supplies and warning beacons

HF Halogen Free

RoHS & REACH COMPLIANT

SPECIFICATIONS

Items		Performance Characteristics
Operating Temperature Range		-20 ~ +55°C
Rated Voltage Range	V_R	330 ~ 350V DC
Capacitance Range	C_R	150 ~ 1500µF
Cap. Tolerance	ΔC	-10 ~ +20% (120Hz ▪ 25°C)
Leakage Current (20°C ▪ V_R applied)	I_{LEAK}	≤ 1·C_R ▪ After 5 minutes [I_{LEAK} (µA) ; C_R (µF)]
Dissipation Factor % (20°C ▪ 120Hz)	tanδ	8% max.

Lifetime Test			
Charge and Discharge 5 ~ 35°C (V_R applied)	Test	**5000 times**	Duration time
	Cycles	30 sec	Charge and discharge cycles
	R_D	0.7 ~ 1Ω	Discharge resistance
	△C/C_R	≤ ±10% of initial measured value	
	tanδ	≤ 150% of initial specified value	
	I_{Leak}	≤ the initial specified value	
Shelf Life 55°C (V_R = 0)	Test	**1000 hours**	
	△C/C_R	≤ ±10% of initial measured value	
	tanδ	≤ 150% of initial specified value	
	I_{Leak}	≤ the initial specified value	
	Before measurement: Restore capacitor to 20°C, apply V_R for 30 min according JIS-C-5101-4		

Pulse and flash-light capacitors are specially adapted to the application.

PHOTO FLASH HAIR REMOVER LASER BEACONS

The data listed in the upper table and the following page are therefore **only a guide** for possible designs of the capacitance, voltage, dimensions, pulse frequency.

Please contact our CapXon product specialists for further details.

For further information please contact sales@capxon.org

DIMENSIONS ▪ All dimensions in mm

Lug type version ▪ Standard type

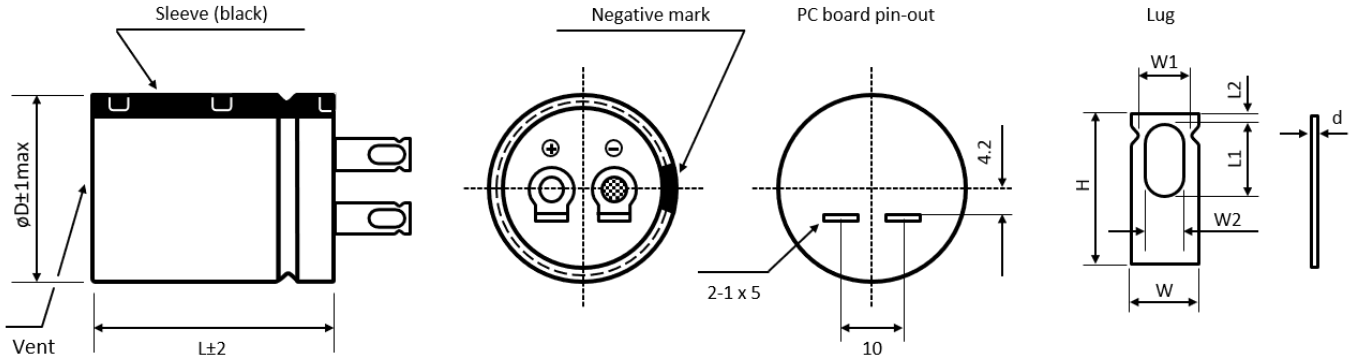

ØD	H ± 0.5	L1 ± 0.1	L2 ± 0.2	W ± 0.2	W1 ± 0.2	W2 ± 0.2	d ± 0.1
25	8	3.5	1	4.6	3.7	2	0.8
30	8	3.5	1	4.6	3.7	2	0.8
35	8	3.5	1	4.6	3.7	2	0.8
40	8	3.5	1	4.6	3.7	2	0.8

Further possible terminal styles can be found in our packaging information liquid snap-in.

PRECAUTIONS, GUIDELINES AND PACKAGING INFORMATON

Unless otherwise agreed in individual specifications, all products are subject to our “General Precautions and Guidelines” as well as our “Packaging Information”. Please refer to the following pages in the table.

General Precautions and Guidelines	Packaging Information Liquid Snap-In
Page 837	Page 579

DISCLAIMER

All product related data (e.g. specification, statements and general information) are subject to change without any notice. It is necessary that the customer observes all product related technical / application information and handling instructions.

CapXon products are designed and manufactured according to severe quality and safety standards. Under no circumstance, CapXon warrants that any CapXon product is suitable for the purposes intended for your application, even CapXon knows the application. It is customer's duty and obligation to check and make sure that CapXon products are suitable for the purposes intended and select the correct and proper CapXon product. Customers are requested to perform a sufficient validation and reliability evaluation to assure needed safety level and reliability performance by suitable designs and to apply proper safeguards (e.g. redundancies, protective circuits).

Particular operating conditions (ambient temperature, ripple current, voltage, thermal resistance, etc.) as well as storage, production or assembly may affect the performance and the lifetime of the capacitor. Please consult CapXon for lifetime estimation, failure mode considerations or worst-case scenarios according to the product technology, product tolerances / deviations or change of the characteristics of the capacitor due to shipment, storage, handling, production and usage.

For aerospace or military application, life-saving, life-sustaining, safety critical applications or any application where failure may cause severe personal injury or death, please consult us before design-in the capacitor in your application.

Except for the written expressed warranties, CapXon does not impliedly, by assumption or whatever else, warrant, undertake, promise any other warranty or guaranty for any CapXon product.

For further information, please visit our website www.capxongroup.com or contact CapXon directly.

LR SERIES ▪ STANDARD, AUDIO 85°C TYPE



KEY FEATURES

AUDIO

- **ALUMINUM ELECTROLYTIC CAPACITOR** ▪ Snap-In type
- Endurance: 85°C ▪ 2000 hours
- Small dimensions
- Especially for audio applications
- Designed to improve audio frequency characteristics and downgrade signal noise

HF Halogen Free

RoHS & REACH COMPLIANT

SPECIFICATIONS

Items		Performance Characteristics							
Operating Temperature Range		-40 ~ +85°C							
Rated Voltage Range	V_R	16 ~ 100V DC							
Surge Voltage	V_S	$V_S = 1.15 \cdot V_R$							
Capacitance Range	C_R	680 ~ 33000µF							
Cap. Tolerance	ΔC	±20% (120Hz ▪ 20°C)							
Leakage Current (20°C ▪ V_R applied)	I_{LEAK}	≤ √3·C_R·V_R ▪ After 5 minutes [I_{LEAK} (µA) ; C_R (µF) ; V_R (V)]							
Dissipation Factor % (20°C ▪ 120Hz)	tanδ	µF / V DC	16	25	35	50	63	80	100
		≤ 8200	35	30	25	20	20	15	15
		10000 ~ 22000	40	35	30	30	25	20	-
		≥ 27000	40	35	35	30	25	-	-
Low Temperature Characteristics at 120Hz	Z ratio max.	V_R (V DC)	16	25	35	50	63	80	100
		Z-25°C/Z+20°C	5	4	4	4	4	4	4
		Z-40°C/Z+20°C	15	15	12	12	12	12	12

Lifetime Test		
Endurance 85°C (V_R applied)	Test	**2000 hours**
	△C/C_R	≤ ±25% of initial measured value
	tanδ	≤ 200% of initial specified value
	I_{Leak}	≤ the initial specified value
Shelf Life 85°C (V_R = 0)	Test	**1000 hours**
	△C/C_R	≤ ±25% of initial measured value
	tanδ	≤ 200% of initial specified value
	I_{Leak}	≤ the initial specified value
	Before measurement: Restore capacitor to 20°C, apply V_R for 30 min according JIS-C-5101-4	

For further information please contact sales@capxon.org

STANDARD RATINGS

V_R (V)	C_R (µF)	ø D (mm)	L (mm)	I_R ▪ Max. Ripple Current +85°C ▪ 120Hz (mA rms)	CapXon Part Number
16	1200	22	20	950	LR122M016M200A □□
	1500	25	20	1100	LR152M016N200A □□
	1800	22	25	1200	LR182M016M250A □□
	2200	30	20	1350	LR222M016O200A □□
	2700	25	25	1750	LR272M016N250A □□
	3300	22	20	1500	LR332M016M200A □□
	3300	25	30	2000	LR332M016N300A □□
	3300	35	20	1950	LR332M016P200A □□
	3900	22	45	2300	LR392M016M450A □□
	3900	25	20	1550	LR392M016N200A □□
	3900	25	35	2350	LR392M016N350A □□
	3900	30	25	2350	LR392M016O250A □□
	4700	22	20	1350	LR472M016M200A □□
	4700	22	25	1750	LR472M016M250A □□
	4700	22	50	2750	LR472M016M500A □□
	4700	25	40	2700	LR472M016N400A □□
	4700	30	30	2700	LR472M016O300A □□
	4700	35	25	2600	LR472M016P250A □□
	5600	25	45	2900	LR562M016N450A □□
	5600	30	20	1850	LR562M016O200A □□
	5600	30	35	2900	LR562M016O350A □□
	6800	22	30	2200	LR682M016M300A □□
	6800	25	20	1700	LR682M016N200A □□
	6800	25	25	2150	LR682M016N250A □□
	6800	25	50	3200	LR682M016N500A □□
	6800	30	40	3200	LR682M016O400A □□
	6800	35	30	3150	LR682M016P300A □□
	8200	22	25	1900	LR822M016M250A □□
	8200	22	35	2400	LR822M016M350A □□
	8200	25	30	2300	LR822M016N300A □□
	8200	30	45	3350	LR822M016O450A □□
	8200	35	20	2250	LR822M016P200A □□
	8200	35	35	3300	LR822M016P350A □□
	10000	22	30	2050	LR103M016M300A □□
	10000	22	40	2650	LR103M016M400A □□
	10000	25	25	2000	LR103M016N250A □□
	10000	25	35	2450	LR103M016N350A □□
	10000	30	20	2100	LR103M016O200A □□
	10000	30	25	2500	LR103M016O250A □□
	10000	35	40	3500	LR103M016P400A □□
	12000	22	35	2200	LR123M016M350A □□
	12000	22	50	2750	LR123M016M500A □□
	12000	25	30	2150	LR123M016N300A □□
	12000	25	40	2750	LR123M016N400A □□

□□: See description at end of standard ratings

For further information please contact sales@capxon.org

STANDARD RATINGS

V_R (V)	C_R (µF)	ø D (mm)	L (mm)	I_R ▪ Max. Ripple Current +85°C ▪ 120Hz (mA rms)	CapXon Part Number
16	12000	30	30	2720	LR123M016O300A □□
	12000	35	20	2100	LR123M016P200A □□
	12000	35	40	3500	LR123M016P400A □□
	12000	35	45	3700	LR123M016P450A □□
	15000	22	40	2500	LR153M016M400A □□
	15000	25	35	2400	LR153M016N350A □□
	15000	25	45	3100	LR153M016N450A □□
	15000	30	25	2500	LR153M016O250A □□
	15000	30	35	3100	LR153M016O350A □□
	18000	22	45	2800	LR183M016M450A □□
	18000	25	40	2600	LR183M016N400A □□
	18000	25	50	3500	LR183M016N500A □□
	18000	30	30	2650	LR183M016O300A □□
	18000	30	40	3400	LR183M016O400A □□
	18000	35	30	3450	LR183M016P300A □□
	22000	25	45	2950	LR223M016N450A □□
	22000	30	35	2900	LR223M016O350A □□
	22000	30	45	3800	LR223M016O450A □□
	22000	35	25	2900	LR223M016P250A □□
	22000	35	35	3800	LR223M016P350A □□
	27000	25	50	3400	LR273M016N500A □□
	27000	30	40	3250	LR273M016O400A □□
	27000	30	50	4250	LR273M016O500A □□
	27000	35	30	3350	LR273M016P300A □□
	27000	35	40	4250	LR273M016P400A □□
	33000	30	45	3700	LR333M016O450A □□
	33000	35	35	3650	LR333M016P350A □□
	33000	35	45	4500	LR333M016P450A □□
25	820	22	20	750	LR821M025M200A □□
	1000	25	20	950	LR102M025N200A □□
	1500	30	20	1300	LR152M025O200A □□
	1800	25	25	1550	LR182M025N250A □□
	2200	22	35	1850	LR222M025M350A □□
	2200	25	20	1500	LR222M025N200A □□
	2200	25	30	1800	LR222M025N300A □□
	2200	30	25	1800	LR222M025O250A □□
	2200	35	20	1750	LR222M025P200A □□
	2700	22	25	1700	LR272M025M250A □□
	2700	22	45	2200	LR272M025M450A □□
	2700	25	35	2150	LR272M025N350A □□
	3300	22	20	1500	LR332M025M200A □□
	3300	22	30	1800	LR332M025M300A □□
	3300	22	50	2500	LR332M025M500A □□
	3300	25	40	2450	LR332M025N400A □□

□□: See description at end of standard ratings

For further information please contact sales@capxon.org

STANDARD RATINGS

V_R (V)	C_R (µF)	ø D (mm)	L (mm)	I_R ▪ Max. Ripple Current +85°C ▪ 120Hz (mA rms)	CapXon Part Number
25	3300	30	20	1850	LR332M025O200A □□
	3300	30	30	2400	LR332M025O300A □□
	3300	35	25	2450	LR332M025P250A □□
	3900	25	20	1550	LR392M025N200A □□
	3900	25	25	1100	LR392M025N250A □□
	3900	25	45	2800	LR392M025N450A □□
	3900	30	35	2800	LR392M025O350A □□
	4700	22	25	1700	LR472M025M250A □□
	4700	22	35	2300	LR472M025M350A □□
	4700	25	30	2250	LR472M025N300A □□
	4700	30	40	3250	LR472M025O400A □□
	4700	35	20	2200	LR472M025P200A □□
	4700	35	30	3150	LR472M025P300A □□
	5600	22	40	2500	LR562M025M400A □□
	5600	25	35	2400	LR562M025N350A □□
	5600	30	20	1850	LR562M025O200A □□
	5600	30	25	2500	LR562M025O250A □□
	5600	30	45	3500	LR562M025O450A □□
	5600	35	35	3500	LR562M025P350A □□
	6800	22	30	2200	LR682M025M300A □□
	6800	22	50	2650	LR682M025M500A □□
	6800	25	25	2150	LR682M025N250A □□
	6800	25	40	2650	LR682M025N400A □□
	6800	30	30	2650	LR682M025O300A □□
	6800	35	40	3800	LR682M025P400A □□
	8200	22	35	2350	LR822M025M350A □□
	8200	25	30	2300	LR822M025N300A □□
	8200	25	45	2900	LR822M025N450A □□
	8200	30	35	2850	LR822M025O350A □□
	8200	35	20	2250	LR822M025P200A □□
	8200	35	25	3050	LR822M025P250A □□
	8200	35	45	4000	LR822M025P450A □□
	10000	22	40	2650	LR103M025M400A □□
	10000	25	35	2500	LR103M025N350A □□
	10000	25	50	3300	LR103M025N500A □□
	10000	30	25	2650	LR103M025O250A □□
	10000	30	40	3300	LR103M025O400A □□
	10000	35	30	3300	LR103M025P300A □□
	12000	22	45	2900	LR123M025M450A □□
	12000	25	40	2750	LR123M025N400A □□
	12000	30	30	2800	LR123M025O300A □□
	12000	30	45	3550	LR123M025O450A □□
	12000	35	25	2650	LR123M025P250A □□
	12000	35	35	3500	LR123M025P350A □□

□□: See description at end of standard ratings

For further information please contact sales@capxon.org

STANDARD RATINGS

V_R (V)	C_R (µF)	ø D (mm)	L (mm)	I_R ▪ Max. Ripple Current +85°C ▪ 120Hz (mA rms)	CapXon Part Number
25	15000	25	25	3150	LR153M025N450A □□
	15000	25	30	3100	LR153M025O350A □□
	15000	25	30	4150	LR153M025O500A □□
	15000	25	35	4000	LR153M025P400A □□
	18000	25	25	3550	LR183M025N500A □□
	18000	25	30	3400	LR183M025O400A □□
	18000	25	35	3500	LR183M025P300A □□
	18000	25	35	4450	LR183M025P450A □□
	22000	25	30	3850	LR223M025O450A □□
	22000	25	35	3850	LR223M025P350A □□
	27000	25	35	4300	LR273M025P400A □□
	33000	25	35	4850	LR333M025P450A □□
35	820	35	25	850	LR821M035N200A □□
	1000	35	22	1000	LR102M035M250A □□
	1200	35	22	1300	LR122M035M200A □□
	1200	35	22	1450	LR122M035M300A □□
	1200	35	25	1400	LR122M035N250A □□
	1200	35	30	1400	LR122M035O200A □□
	1500	35	22	1550	LR152M035M350A □□
	1500	35	25	1550	LR152M035N300A □□
	1800	35	22	1550	LR182M035M250A □□
	1800	35	22	1450	LR182M035M400A □□
	1800	35	25	1650	LR182M035N200A □□
	1800	35	30	1750	LR182M035O250A □□
	1800	35	35	1700	LR182M035P200A □□
	2200	35	22	1950	LR222M035M450A □□
	2200	35	25	1950	LR222M035N350A □□
	2200	35	30	1950	LR222M035O300A □□
	2700	35	22	2050	LR272M035M300A □□
	2700	35	25	2000	LR272M035N250A □□
	2700	35	25	2350	LR272M035N450A □□
	2700	35	30	2050	LR272M035O200A □□
	2700	35	30	2300	LR272M035O350A □□
	2700	35	35	2300	LR272M035P250A □□
	3300	35	22	1750	LR332M035M250A □□
	3300	35	22	2250	LR332M035M350A □□
	3300	35	25	2200	LR332M035N300A □□
	3300	35	25	2700	LR332M035N500A □□
	3300	35	30	2700	LR332M035O400A □□
	3300	35	35	2650	LR332M035P300A □□
	3900	35	22	2400	LR392M035M400A □□
	3900	35	25	2300	LR392M035N350A □□
	3900	35	30	1850	LR392M035O200A □□
	3900	35	30	2400	LR392M035O250A □□

□□: See description at end of standard ratings

For further information please contact sales@capxon.org

STANDARD RATINGS

V_R (V)	C_R (µF)	ø D (mm)	L (mm)	I_R ▪ Max. Ripple Current +85°C ▪ 120Hz (mA rms)	CapXon Part Number
35	3900	30	45	3000	LR392M035O450A □□
	3900	35	20	2500	LR392M035P200A □□
	3900	35	35	3000	LR392M035P350A □□
	4700	22	30	2200	LR472M035M300A □□
	4700	22	45	2700	LR472M035M450A □□
	4700	25	25	2150	LR472M035N250A □□
	4700	30	30	2550	LR472M035O300A □□
	4700	30	50	3550	LR472M035O500A □□
	4700	35	40	3550	LR472M035P400A □□
	5600	22	35	2350	LR562M035M350A □□
	5600	22	40	3000	LR562M035M400A □□
	5600	22	50	2600	LR562M035M500A □□
	5600	25	30	2250	LR562M035N300A □□
	5600	25	40	3000	LR562M035N400A □□
	5600	35	20	2250	LR562M035P200A □□
	5600	35	25	2850	LR562M035P250A □□
	5600	35	45	3800	LR562M035P450A □□
	6800	30	25	2600	LR682M035O250A □□
	6800	30	35	3300	LR682M035O350A □□
	6800	35	30	3050	LR682M035P300A □□
	6800	35	50	4150	LR682M035P500A □□
	8200	22	45	2900	LR822M035M450A □□
	8200	25	40	2700	LR822M035N400A □□
	8200	30	30	2750	LR822M035O300A □□
	8200	30	40	3600	LR822M035O400A □□
	8200	35	35	3300	LR822M035P350A □□
	10000	25	45	3050	LR103M035N450A □□
	10000	30	35	3000	LR103M035O350A □□
	10000	30	50	3800	LR103M035O500A □□
	10000	35	25	3200	LR103M035P250A □□
	10000	35	40	3700	LR103M035P400A □□
	12000	25	50	3450	LR123M035N500A □□
	12000	30	40	3300	LR123M035O400A □□
	12000	35	30	3400	LR123M035P300A □□
	12000	35	35	4100	LR123M035P350A □□
	12000	35	45	3800	LR123M035P450A □□
	15000	30	45	3800	LR153M035O450A □□
	15000	35	50	4800	LR153M035P500A □□
	18000	30	50	4300	LR183M035O500A □□
	18000	35	40	4150	LR183M035P400A □□
	22000	35	45	4700	LR223M035P450A □□
50	680	22	25	1000	LR681M050M250A □□
	820	22	20	1000	LR821M050M200A □□
	820	22	30	1250	LR821M050M300A □□

□□: See description at end of standard ratings

For further information please contact sales@capxon.org

STANDARD RATINGS

V_R (V)	C_R (µF)	ø D (mm)	L (mm)	I_R ▪ Max. Ripple Current +85°C ▪ 120Hz (mA rms)	CapXon Part Number
50	820	25	20	1350	LR821M050N200A □□
	1000	25	20	1500	LR102M050N200A □□
	1500	22	20	1550	LR152M050M200A □□
	1500	22	30	1800	LR152M050M300A □□
	1500	22	45	2200	LR152M050M450A □□
	1500	25	35	2150	LR152M050N350A □□
	1500	30	20	1800	LR152M050O200A □□
	1500	30	25	2150	LR152M050O250A □□
	1800	22	50	2450	LR182M050M500A □□
	1800	25	20	1650	LR182M050N200A □□
	1800	25	25	2150	LR182M050N250A □□
	1800	25	40	2450	LR182M050N400A □□
	1800	35	25	2400	LR182M050P250A □□
	2200	22	25	1850	LR222M050M250A □□
	2200	22	35	2350	LR222M050M350A □□
	2200	25	30	2300	LR222M050N300A □□
	2200	25	50	2650	LR222M050N500A □□
	2200	30	35	2600	LR222M050O350A □□
	2200	35	20	2600	LR222M050P200A □□
	2200	35	30	2600	LR222M050P300A □□
	2700	22	45	2450	LR272M050M450A □□
	2700	25	35	2500	LR272M050N350A □□
	2700	30	25	2600	LR272M050O250A □□
	2700	30	45	3000	LR272M050O450A □□
	2700	35	35	2950	LR272M050P350A □□
	3300	22	35	2200	LR332M050M350A □□
	3300	22	50	2800	LR332M050M500A □□
	3300	25	40	2800	LR332M050N400A □□
	3300	30	30	2800	LR332M050O300A □□
	3300	30	50	3300	LR332M050O500A □□
	3300	35	40	3250	LR332M050P400A □□
	3900	22	40	2450	LR392M050M400A □□
	3900	25	30	2500	LR392M050N300A □□
	3900	25	45	3000	LR392M050N450A □□
	3900	30	25	2350	LR392M050O250A □□
	3900	30	35	3000	LR392M050O350A □□
	3900	35	20	2450	LR392M050P200A □□
	3900	35	25	3150	LR392M050P250A □□
	3900	35	45	3500	LR392M050P450A □□
	4700	22	45	2600	LR472M050M450A □□
	4700	25	35	2700	LR472M050N350A □□
	4700	25	50	3400	LR472M050N500A □□
	4700	30	40	3300	LR472M050O400A □□
	4700	35	30	3350	LR472M050P300A □□

□□: See description at end of standard ratings

For further information please contact sales@capxon.org

STANDARD RATINGS

V_R (V)	C_R (µF)	ø D (mm)	L (mm)	I_R ▪ Max. Ripple Current +85°C ▪ 120Hz (mA rms)	CapXon Part Number
50	4700	35	50	3900	LR472M050P500A □□
	5600	22	50	2900	LR562M050M500A □□
	5600	25	40	2900	LR562M050N400A □□
	5600	30	30	3000	LR562M050O300A □□
	5600	30	45	3600	LR562M050O450A □□
	5600	35	20	2850	LR562M050P200A □□
	5600	35	35	3600	LR562M050P350A □□
	6800	25	40	3300	LR682M050N400A □□
	6800	30	35	3250	LR682M050O350A □□
	6800	30	50	4100	LR682M050O500A □□
	6800	35	40	3950	LR682M050P400A □□
	8200	30	40	3550	LR822M050O400A □□
	8200	35	30	3650	LR822M050P300A □□
	8200	35	45	4400	LR822M050P450A □□
	10000	30	45	4000	LR103M050O450A □□
	10000	35	35	4000	LR103M050P350A □□
	10000	35	50	5500	LR103M050P500A □□
	12000	35	40	4350	LR123M050P400A □□
	15000	35	50	4700	LR153M050P500A □□
63	680	22	25	1750	LR681M063M250A □□
	820	22	20	1300	LR821M063M200A □□
	820	22	30	1900	LR821M063M300A □□
	820	25	20	1650	LR821M063N200A □□
	820	25	25	1850	LR821M063N250A □□
	820	30	20	1900	LR821M063O200A □□
	1000	22	25	1850	LR102M063M250A □□
	1000	22	35	2050	LR102M063M350A □□
	1000	25	30	2000	LR102M063N300A □□
	1200	22	30	1950	LR122M063M300A □□
	1200	22	40	2250	LR122M063M400A □□
	1200	25	20	1650	LR122M063N200A □□
	1200	25	25	1900	LR122M063N250A □□
	1200	30	20	1950	LR122M063O200A □□
	1200	30	25	2200	LR122M063O250A □□
	1200	35	20	2300	LR122M063P200A □□
	1500	22	25	1900	LR152M063M250A □□
	1500	22	35	2150	LR152M063M350A □□
	1500	22	45	2600	LR152M063M450A □□
	1500	25	30	2100	LR152M063N300A □□
	1500	25	35	2650	LR152M063N350A □□
	1800	22	30	2000	LR182M063M300A □□
	1800	22	40	2350	LR182M063M400A □□
	1800	22	50	2900	LR182M063M500A □□
	1800	25	25	2000	LR182M063N250A □□

□□: See description at end of standard ratings

For further information please contact sales@capxon.org

STANDARD RATINGS

V_R (V)	C_R (µF)	ø D (mm)	L (mm)	I_R ▪ Max. Ripple Current +85°C ▪ 120Hz (mA rms)	CapXon Part Number
63	1800	25	40	2900	LR182M063N400A □□
	1800	30	20	2050	LR182M063O200A □□
	1800	30	25	2350	LR182M063O250A □□
	1800	30	30	2900	LR182M063O300A □□
	1800	35	20	2450	LR182M063P200A □□
	1800	35	25	2700	LR182M063P250A □□
	2200	22	35	2200	LR222M063M350A □□
	2200	22	45	2700	LR222M063M450A □□
	2200	25	30	2150	LR222M063N300A □□
	2200	25	35	2750	LR222M063N350A □□
	2200	25	45	3250	LR222M063N450A □□
	2200	30	30	2500	LR222M063O300A □□
	2200	30	35	3200	LR222M063O350A □□
	2200	35	20	2100	LR222M063P200A □□
	2700	22	40	2450	LR272M063M400A □□
	2700	25	35	2350	LR272M063N350A □□
	2700	25	45	2800	LR272M063N450A □□
	2700	30	25	2500	LR272M063O250A □□
	2700	30	35	2750	LR272M063O350A □□
	2700	30	45	3300	LR272M063O450A □□
	2700	35	25	2950	LR272M063P250A □□
	2700	35	30	3650	LR272M063P300A □□
	3300	22	45	2800	LR332M063M450A □□
	3300	25	40	2600	LR332M063N400A □□
	3300	25	50	3200	LR332M063N500A □□
	3300	30	30	2700	LR332M063O300A □□
	3300	30	40	3200	LR332M063O400A □□
	3300	30	50	3800	LR332M063O500A □□
	3300	35	30	3150	LR332M063P300A □□
	3300	35	35	4000	LR332M063P350A □□
	3900	25	45	2850	LR392M063N450A □□
	3900	30	35	2850	LR392M063O350A □□
	3900	30	45	3350	LR392M063O450A □□
	3900	35	35	3350	LR392M063P350A □□
	3900	35	40	4300	LR392M063P400A □□
	4700	25	50	3200	LR472M063N500A □□
	4700	30	40	3100	LR472M063O400A □□
	4700	30	50	3800	LR472M063O500A □□
	4700	35	30	3200	LR472M063P300A □□
	4700	35	50	4500	LR472M063P500A □□
	5600	30	45	3450	LR562M063O450A □□
	5600	35	35	3400	LR562M063P350A □□
	5600	35	40	4350	LR562M063P400A □□
	6800	30	50	3900	LR682M063O500A □□

□□: See description at end of standard ratings

For further information please contact sales@capxon.org

STANDARD RATINGS

V_R (V)	C_R (µF)	ø D (mm)	L (mm)	I_R ▪ Max. Ripple Current +85°C ▪ 120Hz (mA rms)	CapXon Part Number
63	6800	35	40	3750	LR682M063P400A □□
	6800	35	50	4600	LR682M063P500A □□
	8200	35	45	4200	LR822M063P450A □□
	10000	35	50	4800	LR103M063P500A □□
80	680	22	35	2250	LR681M080M350A □□
	680	25	30	2150	LR681M080N300A □□
	820	22	30	2050	LR821M080M300A □□
	820	22	40	2450	LR821M080M400A □□
	820	25	20	1650	LR821M080N200A □□
	820	25	25	2000	LR821M080N250A □□
	820	25	35	2350	LR821M080N350A □□
	820	30	20	2050	LR821M080O200A □□
	820	30	25	2400	LR821M080O250A □□
	820	35	20	2550	LR821M080P200A □□
	1000	22	25	1850	LR102M080M250A □□
	1000	22	35	2200	LR102M080M350A □□
	1000	22	50	2600	LR102M080M500A □□
	1000	25	30	2150	LR102M080N300A □□
	1000	25	40	2600	LR102M080N400A □□
	1000	30	30	2600	LR102M080O300A □□
	1000	35	20	2100	LR102M080P200A □□
	1200	22	30	1950	LR122M080M300A □□
	1200	22	40	2450	LR122M080M400A □□
	1200	25	25	1900	LR122M080N250A □□
	1200	25	35	2300	LR122M080N350A □□
	1200	25	45	2850	LR122M080N450A □□
	1200	30	20	2000	LR122M080O200A □□
	1200	30	25	2400	LR122M080O250A □□
	1200	30	35	2800	LR122M080O350A □□
	1200	35	25	2950	LR122M080P250A □□
	1500	22	35	2150	LR152M080M350A □□
	1500	22	50	2600	LR152M080M500A □□
	1500	25	30	2100	LR152M080N300A □□
	1500	25	40	2650	LR152M080N400A □□
	1500	25	50	3300	LR152M080N500A □□
	1500	30	30	2650	LR152M080O300A □□
	1500	30	40	3200	LR152M080O400A □□
	1500	35	30	3250	LR152M080P300A □□
	1800	22	40	2350	LR182M080M400A □□
	1800	22	45	2700	LR182M080M450A □□
	1800	25	45	2850	LR182M080N450A □□
	1800	30	25	2400	LR182M080O250A □□
	1800	30	35	2850	LR182M080O350A □□
	1800	30	45	3550	LR182M080O450A □□

□□: See description at end of standard ratings

For further information please contact sales@capxon.org

STANDARD RATINGS

V_R (V)	C_R (µF)	ø D (mm)	L (mm)	I_R ▪ Max. Ripple Current +85°C ▪ 120Hz (mA rms)	CapXon Part Number
80	1800	35	20	2500	LR182M080P200A □□
	1800	35	25	3000	LR182M080P250A □□
	1800	35	35	3500	LR182M080P350A □□
	2200	25	35	2750	LR222M080N350A □□
	2200	25	50	3250	LR222M080N500A □□
	2200	30	30	2550	LR222M080O300A □□
	2200	30	40	3150	LR222M080O400A □□
	2200	30	50	4050	LR222M080O500A □□
	2200	35	30	3250	LR222M080P300A □□
	2200	35	40	3900	LR222M080P400A □□
	2700	30	35	2800	LR272M080O350A □□
	2700	30	45	3600	LR272M080O450A □□
	2700	35	25	3000	LR272M080P250A □□
	2700	35	35	3550	LR272M080P350A □□
	2700	35	45	4450	LR272M080P450A □□
	3300	25	50	3250	LR332M080N500A □□
	3300	30	40	3150	LR332M080O400A □□
	3300	30	50	4100	LR332M080O500A □□
	3300	35	30	3200	LR332M080P300A □□
	3300	35	40	3950	LR332M080P400A □□
	3300	35	50	5050	LR332M080P500A □□
	3900	30	45	3450	LR392M080O450A □□
	3900	35	35	3400	LR392M080P350A □□
	3900	35	45	4350	LR392M080P450A □□
	4700	30	45	3850	LR472M080O450A □□
	4700	35	40	3750	LR472M080P400A □□
	4700	35	50	4850	LR472M080P500A □□
	5600	35	45	4100	LR562M080P450A □□
	6800	35	50	4650	LR682M080P500A □□
100	680	22	25	1750	LR681M100M250A □□
	680	22	35	2150	LR681M100M350A □□
	680	22	45	2650	LR681M100M450A □□
	680	25	30	2100	LR681M100N300A □□
	680	25	35	2700	LR681M100N350A □□
	820	22	30	1850	LR821M100M300A □□
	820	22	40	2400	LR821M100M400A □□
	820	22	50	3000	LR821M100M500A □□
	820	25	25	1800	LR821M100N250A □□
	820	25	40	3000	LR821M100N400A □□
	820	30	20	1900	LR821M100O200A □□
	820	30	25	2350	LR821M100O250A □□
	820	35	20	2450	LR821M100P200A □□
	820	35	25	2850	LR821M100P250A □□
	1000	22	45	2700	LR102M100M450A □□

□□: See description at end of standard ratings

For further information please contact sales@capxon.org

STANDARD RATINGS

V_R (V)	C_R (µF)	ø D (mm)	L (mm)	I_R ▪ Max. Ripple Current +85°C ▪ 120Hz (mA rms)	CapXon Part Number
100	1000	25	35	2350	LR102M100N350A □□
	1000	25	40	3100	LR102M100N400A □□
	1000	25	50	2350	LR102M100N500A □□
	1000	30	30	3000	LR102M100O300A □□
	1000	30	35	3300	LR102M100O350A □□
	1000	35	30	3050	LR102M100P300A □□
	1200	22	40	2200	LR122M100M400A □□
	1200	22	50	3000	LR122M100M500A □□
	1200	25	30	2750	LR122M100N300A □□
	1200	30	25	2200	LR122M100O250A □□
	1200	30	30	3050	LR122M100O300A □□
	1200	30	40	3600	LR122M100O400A □□
	1200	35	20	2300	LR122M100P200A □□
	1200	35	25	2900	LR122M100P250A □□
	1200	35	35	3300	LR122M100P350A □□
	1500	22	45	2550	LR152M100M450A □□
	1500	25	35	3600	LR152M100N350A □□
	1500	25	50	3200	LR152M100N500A □□
	1500	30	35	3400	LR152M100O350A □□
	1500	30	50	3900	LR152M100O500A □□
	1500	35	30	3400	LR152M100P300A □□
	1500	35	40	3950	LR152M100P400A □□
	1800	22	50	2850	LR182M100M500A □□
	1800	25	40	2850	LR182M100N400A □□
	1800	30	30	2900	LR182M100O300A □□
	1800	30	40	3700	LR182M100O400A □□
	1800	35	25	2750	LR182M100P250A □□
	1800	35	35	3400	LR182M100P350A □□
	1800	35	45	4150	LR182M100P450A □□
	2200	25	45	3200	LR222M100N450A □□
	2200	30	35	3200	LR222M100O350A □□
	2200	30	50	3950	LR222M100O500A □□
	2200	35	30	3000	LR222M100P300A □□
	2200	35	40	3800	LR222M100P400A □□
	2200	35	50	4750	LR222M100P500A □□
	2700	30	40	3550	LR272M100O400A □□
	2700	35	35	3250	LR272M100P350A □□
	2700	35	45	4300	LR272M100P450A □□
	3300	30	50	3750	LR332M100O500A □□
	3300	35	50	4950	LR332M100P500A □□
	3900	35	40	4300	LR392M100P400A □□
	4700	35	50	4500	LR472M100P500A □□

□□: Enter **P6** for standard type ▪ 6mm pin length
□□□: Enter **Z6** for 3-pin type ▪ 6mm pin length
□□: Enter **Y6** for multipin-type ▪ 6mm pin length
□□: Enter **P4** for standard type ▪ 4mm pin length
□□□: Enter **Z4** for 3-pin type ▪ 4mm pin length
□□□: Enter **Y4** for multipin type ▪ 4mm pin length

For further information please contact sales@capxon.org

DIMENSIONS ▪ All dimensions in mm

2-pin version ▪ Standard type

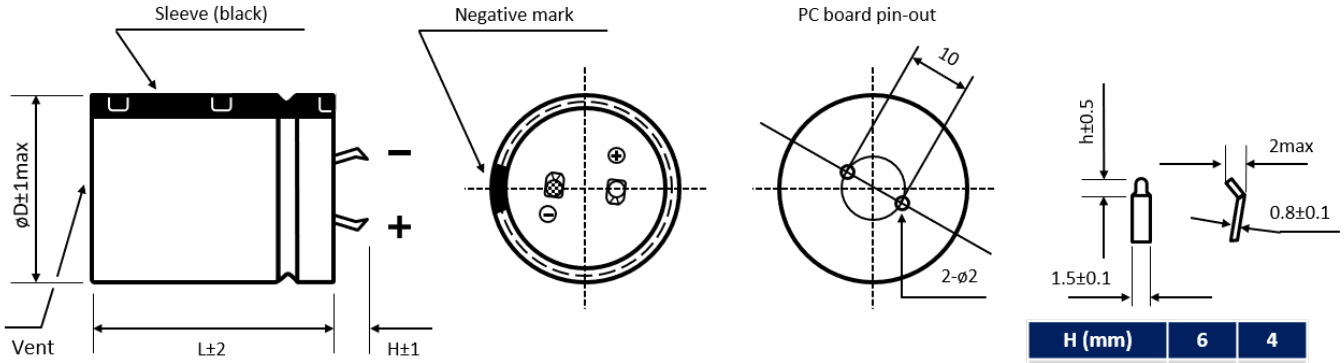

H (mm)	6	4
h (mm)	2.5	1.5

Standard: H = 6 ± 1mm. Also available H = 4 ± 1mm

3-pin version ▪ Polarity protection

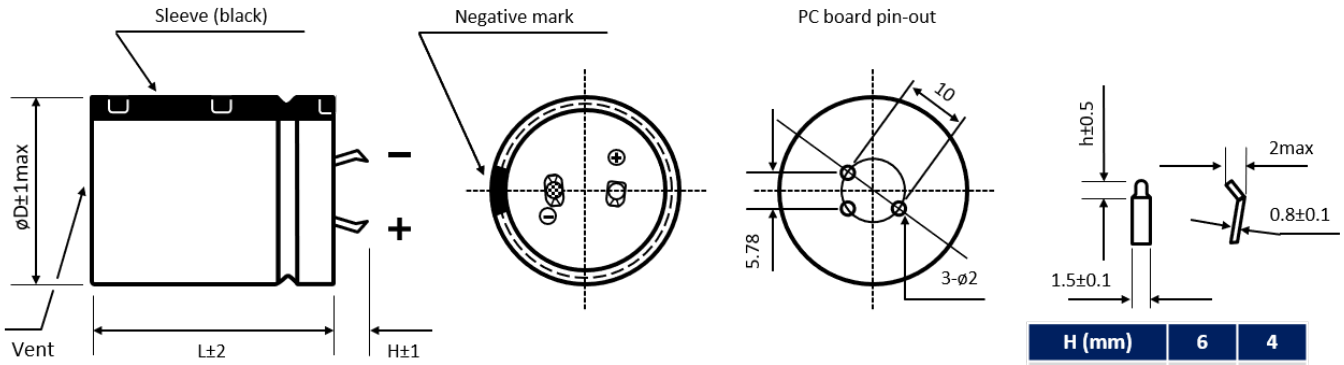

H (mm)	6	4
h (mm)	2.5	1.5

Standard: H = 4 ± 1mm. Also available H = 6 ± 1mm

Multipin version ▪ Diameter ø D ≥ 30 mm

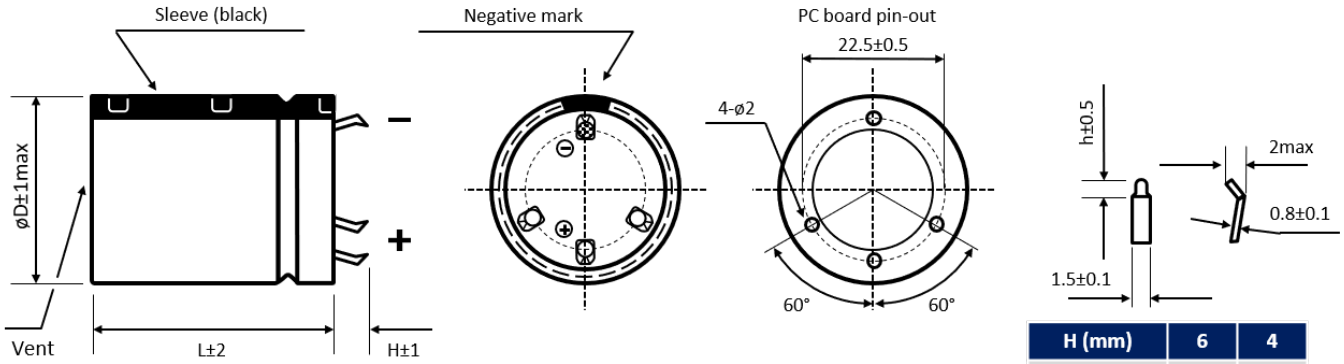

H (mm)	6	4
h (mm)	2.5	1.5

Standard: H = 6 ± 1mm. Also available H = 4 ± 1mm

Further possible terminal styles can be found in our packaging information liquid snap-in.

For further information please contact sales@capxon.org

MULTIPLIER K_f for RIPPLE CURRENT vs. FREQUENCY

C_R (µF) / Frequency (Hz)	50/60	100/120	1k	10k	100k
$C_R \leq 100$	0.8	1	1.36	1.48	1.53
$> 100 < C_R \leq 1000$	0.8	1	1.25	1.35	1.38
$1000 \leq C_R$	0.8	1	1.17	1.25	1.28

PRECAUTIONS, GUIDELINES AND PACKAGING INFORMATON

Unless otherwise agreed in individual specifications, all products are subject to our “General Precautions and Guidelines” as well as our “Packaging Information”. Please refer to the following pages in the table.

General Precautions and Guidelines	Packaging Information Liquid Snap-In
Page 837	Page 579

DISCLAIMER

All product related data (e.g. specification, statements and general information) are subject to change without any notice. It is necessary that the customer observes all product related technical / application information and handling instructions.

CapXon products are designed and manufactured according to severe quality and safety standards. Under no circumstance, CapXon warrants that any CapXon product is suitable for the purposes intended for your application, even CapXon knows the application. It is customer's duty and obligation to check and make sure that CapXon products are suitable for the purposes intended and select the correct and proper CapXon product. Customers are requested to perform a sufficient validation and reliability evaluation to assure needed safety level and reliability performance by suitable designs and to apply proper safeguards (e.g. redundancies, protective circuits).

Particular operating conditions (ambient temperature, ripple current, voltage, thermal resistance, etc.) as well as storage, production or assembly may affect the performance and the lifetime of the capacitor. Please consult CapXon for lifetime estimation, failure mode considerations or worst-case scenarios according to the product technology, product tolerances / deviations or change of the characteristics of the capacitor due to shipment, storage, handling, production and usage.

For aerospace or military application, life-saving, life-sustaining, safety critical applications or any application where failure may cause severe personal injury or death, please consult us before design-in the capacitor in your application.

Except for the written expressed warranties, CapXon does not impliedly, by assumption or whatever else, warrant, undertake, promise any other warranty or guaranty for any CapXon product.

For further information, please visit our website www.capxongroup.com or contact CapXon directly.

LP SERIES ▪ STANDARD 85°C TYPE



KEY FEATURES

HIGH VOLTAGE

- **ALUMINUM ELECTROLYTIC CAPACITOR** ▪ Snap-In type
- Useful life: 85°C ▪ 3 000 up to 5 000 hours
- Wide capacitance range
- Small dimensions
- Stable operating under steady state environment

HF Halogen Free

RoHS & REACH COMPLIANT

SPECIFICATIONS

Items		Performance Characteristics										
Operating Temperature Range		-40 ~ +85°C						-25 ~ +85°C				
Rated Voltage Range	V_R	6.3 ~ 350V DC						385 ~ 600V DC				
Surge Voltage	V_S	($V_R \le 315V$): $V_S = 1.15 \cdot V_R$						($V_R > 315V$): $V_S = 1.10 \cdot V_R$				
Capacitance Range	C_R	100 ~ 100000µF						22 ~ 2700µF				
Cap. Tolerance	ΔC	±20% (120Hz ▪ 20°C)										
Leakage Current (20°C ▪ V_R applied)	I_{LEAK}	≤ √3·C_R·V_R ▪ After 5 minutes [I_{LEAK} (µA) ; C_R (µF) ; V_R (V)]										
Dissipation Factor % (20°C ▪ 120Hz)	tanδ	µF / V DC	6.3	10	16	25	35	50	63	80	100	160 ~ 420	450 ~ 600
		≤ 8200	-	35	35	30	25	20	20	15	15	15	20
		10000 ~ 22000	55	40	40	35	30	30	25	20	-	-	-
		≥ 27000	60	50	40	35	35	30	25	-	-	-	-
Low Temperature Characteristics at 120Hz	Z ratio max.	V_R (V DC)	6.3 ~ 16		25	35	50 ~ 100		160 ~ 250		315 ~ 350		400 ~ 600
		Z-25°C/Z+20°C	5		4	4	4		4		8		8
		Z-40°C/Z+20°C	15		15	12	12		8		12		-

Lifetime Test		$V_R \le 100V$	$V_R > 100V$
Useful Life 85°C (V_R & I_R applied)	Test	**3 000 hours**	**5 000 hours**
	△C/C_R	≤ ±30% of initial measured value	≤ ±20% of initial measured value
	tanδ	≤ 300% of initial specified value	≤ 200% of initial specified value
	I_{Leak}	≤ the initial specified value	≤ the initial specified value
	Deviation Rate @ Useful Life: 10 000 FIT = 1%/1000h with 60% confidence level ▪ parts show higher drift as test criteria		
Endurance 85°C (V_R & I_R applied)	Test	**2 000 hours**	
	△C/C_R	≤ ±20% of initial measured value	≤ ±15% of initial measured value
	tanδ	≤ 200% of initial specified value	≤ 175% of initial specified value
	I_{Leak}	≤ the initial specified value	≤ the initial specified value
Shelf Life 85°C (V_R = 0)	Test	**1 000 hours**	
	△C/C_R	≤ ±20% of initial measured value	≤ ±15% of initial measured value
	tanδ	≤ 200% of initial specified value	≤ 175% of initial specified value
	I_{Leak}	≤ the initial specified value	≤ the initial specified value
	Before measurement: Restore capacitor to 20°C, apply V_R for 30 min according JIS-C-5101-4		
Vibration Resistance Test	Max. 10g force, f_{RANGE} 10Hz … 55Hz, amplitude 0.75mm; X/Y/Z-axis each 2h; capacitor rigidly clamped by body to surface ▪ IEC 60068-2-6		

For further information please contact sales@capxon.org

STANDARD RATINGS

V_R (V)	C_R (µF)	ø D (mm)	L (mm)	Typ. ESR +20°C ▪ 120Hz (mΩ)	Max. ESR +20°C ▪ 120Hz (mΩ)	I_R ▪ Max. Ripple Current +85°C ▪ 120Hz (mA rms)	CapXon Part Number
6.3	15000	22	25	37	49	2500	LP153M6R3M250A □□
	18000	22	30	31	41	2700	LP183M6R3M300A □□
	18000	25	25	31	41	2710	LP183M6R3N250A □□
	22000	22	30	26	33	3100	LP223M6R3M300A □□
	22000	25	25	26	33	3120	LP223M6R3N250A □□
	27000	22	35	23	29	3500	LP273M6R3M350A □□
	27000	25	30	23	29	3550	LP273M6R3N300A □□
	27000	30	25	23	29	3600	LP273M6R3O250A □□
	33000	22	40	19	24	3580	LP333M6R3M400A □□
	33000	25	35	19	24	4000	LP333M6R3N350A □□
	33000	30	25	19	24	4000	LP333M6R3O250A □□
	39000	22	50	16	20	4600	LP393M6R3M500A □□
	39000	25	40	16	20	4500	LP393M6R3N400A □□
	39000	30	30	16	20	4500	LP393M6R3O300A □□
	39000	35	25	16	20	4550	LP393M6R3P250A □□
	47000	25	45	13	17	5100	LP473M6R3N450A □□
	47000	30	35	13	17	5100	LP473M6R3O350A □□
	47000	35	30	13	17	5120	LP473M6R3P300A □□
	56000	25	50	11	14	5750	LP563M6R3N500A □□
	56000	30	40	11	14	5800	LP563M6R3O400A □□
	56000	35	30	11	14	5800	LP563M6R3P300A □□
	68000	30	45	9	12	6500	LP683M6R3O450A □□
	68000	35	35	9	12	6500	LP683M6R3P350A □□
	82000	30	50	8	10	7350	LP823M6R3O500A □□
	82000	35	40	8	10	7380	LP823M6R3P400A □□
	100000	35	45	6	8	8350	LP104M6R3P450A □□
10	4700	22	20	76	99	2400	LP472M010M200A □□
	6800	22	25	53	68	2840	LP682M010M250A □□
	8200	22	25	44	57	2900	LP822M010M250A □□
	10000	22	25	36	46	2950	LP103M010M250A □□
	10000	25	25	36	46	3060	LP103M010N250A □□
	12000	22	25	34	44	3320	LP123M010M250A □□
	12000	25	25	34	44	3430	LP123M010N250A □□
	15000	22	30	27	35	3400	LP153M010M300A □□
	15000	25	25	27	35	3850	LP153M010N250A □□
	18000	22	35	23	29	4300	LP183M010M350A □□
	18000	25	25	23	29	4200	LP183M010N250A □□
	22000	22	40	19	24	4800	LP223M010M400A □□
	22000	25	30	19	24	4750	LP223M010N300A □□
	22000	30	25	19	24	4830	LP223M010O250A □□
	27000	22	45	19	25	5300	LP273M010M450A □□
	27000	25	35	19	25	5100	LP273M010N350A □□
	27000	30	30	19	25	5320	LP273M010O300A □□
	33000	22	50	15	20	5500	LP333M010M500A □□

□□: See description at end of standard ratings

For further information please contact sales@capxon.org

STANDARD RATINGS

V_R (V)	C_R (µF)	ø D (mm)	L (mm)	Typ. ESR +20°C ▪ 120Hz (mΩ)	Max. ESR +20°C ▪ 120Hz (mΩ)	I_R ▪ Max. Ripple Current +85°C ▪ 120Hz (mA rms)	CapXon Part Number
10	33000	25	40	15	20	5500	LP333M010N400A □□
	33000	30	30	15	20	5500	LP333M010O300A □□
	33000	35	25	15	20	5600	LP333M010P250A □□
	39000	25	45	13	17	6310	LP393M010N450A □□
	39000	30	35	13	17	6250	LP393M010O350A □□
	39000	35	30	13	17	6390	LP393M010P300A □□
	47000	25	50	11	14	6600	LP473M010N500A □□
	47000	30	40	11	14	6700	LP473M010O400A □□
	47000	35	30	11	14	6720	LP473M010P300A □□
	56000	30	45	9	12	6800	LP563M010O450A □□
	56000	35	35	9	12	6900	LP563M010P350A □□
	68000	30	50	8	10	7600	LP683M010O500A □□
	68000	35	40	8	10	7800	LP683M010P400A □□
	82000	35	50	6	8	8500	LP823M010P500A □□
16	4700	22	20	76	99	2400	LP472M016M200A □□
	6800	22	25	53	68	2840	LP682M016M250A □□
	8200	22	25	44	57	2900	LP822M016M250A □□
	10000	22	25	36	46	3060	LP103M016M250A □□
	10000	25	25	36	46	3500	LP103M016N250A □□
	12000	22	30	34	44	3430	LP123M016M300A □□
	12000	25	25	34	44	3450	LP123M016N250A □□
	15000	22	35	27	35	3940	LP153M016M350A □□
	15000	25	30	27	35	4200	LP153M016N300A □□
	15000	30	25	27	35	3950	LP153M016O250A □□
	18000	22	40	23	29	4500	LP183M016M400A □□
	18000	25	30	23	29	4340	LP183M016N300A □□
	22000	22	45	19	24	4800	LP223M016M450A □□
	22000	25	35	19	24	4750	LP223M016N350A □□
	22000	25	40	19	24	5100	LP223M016N400A □□
	22000	30	30	19	24	5200	LP223M016O300A □□
	27000	25	45	15	20	6300	LP273M016N450A □□
	27000	30	35	15	20	6500	LP273M016O350A □□
	27000	35	25	15	20	5900	LP273M016P250A □□
	33000	25	50	12	16	6500	LP333M016N500A □□
	33000	30	40	12	16	6600	LP333M016O400A □□
	33000	35	30	12	16	6800	LP333M016P300A □□
	39000	25	45	10	14	5800	LP393M016N450A □□
	39000	30	45	10	14	7050	LP393M016O450A □□
	39000	35	35	10	14	7100	LP393M016P350A □□
	47000	25	50	9	11	6200	LP473M016N500A □□
	47000	30	50	9	11	7650	LP473M016O500A □□
	47000	35	40	9	11	7750	LP473M016P400A □□
	56000	30	50	7	10	7800	LP563M016O500A □□
	56000	35	45	7	10	8100	LP563M016P450A □□

□□: See description at end of standard ratings

For further information please contact sales@capxon.org

STANDARD RATINGS

V_R (V)	C_R (µF)	ø D (mm)	L (mm)	Typ. ESR +20°C ▪ 120Hz (mΩ)	Max. ESR +20°C ▪ 120Hz (mΩ)	I_R ▪ Max. Ripple Current +85°C ▪ 120Hz (mA rms)	CapXon Part Number
16	56000	35	50	7	10	8200	LP563M016P500A □□
	68000	35	50	6	8	8550	LP683M016P500A □□
25	4700	22	25	65	85	2640	LP472M025M250A □□
	5600	22	25	55	71	2720	LP562M025M250A □□
	6800	22	30	45	59	3100	LP682M025M300A □□
	6800	25	25	45	59	3200	LP682M025N250A □□
	8200	22	30	37	49	3150	LP822M025M300A □□
	8200	25	25	37	49	3250	LP822M025N250A □□
	10000	22	35	31	40	3430	LP103M025M350A □□
	10000	25	30	31	40	3900	LP103M025N300A □□
	10000	30	25	31	40	3430	LP103M025O250A □□
	12000	22	40	30	39	3840	LP123M025M400A □□
	12000	25	35	30	39	4370	LP123M025N350A □□
	12000	30	30	30	39	4400	LP123M025O300A □□
	15000	22	50	24	31	4940	LP153M025M500A □□
	15000	25	40	24	31	4800	LP153M025N400A □□
	15000	30	30	24	31	4850	LP153M025O300A □□
	18000	25	45	20	26	5500	LP183M025N450A □□
	18000	30	35	20	26	5600	LP183M025O350A □□
	22000	30	35	16	21	5400	LP223M025O350A □□
	22000	35	30	16	21	5500	LP223M025P300A □□
	27000	30	45	13	17	6250	LP273M025O450A □□
	27000	35	35	13	17	6300	LP273M025P350A □□
	33000	30	50	11	14	6850	LP333M025O500A □□
	33000	35	40	11	14	6900	LP333M025P400A □□
	39000	35	45	9	12	7360	LP393M025P450A □□
	47000	35	50	8	10	8620	LP473M025P500A □□
35	2200	22	25	120	150	2180	LP222M035M250A □□
	3300	22	25	77	100	2460	LP332M035M250A □□
	3900	22	25	65	85	2500	LP392M035M250A □□
	4700	22	30	54	71	3100	LP472M035M300A □□
	4700	25	25	54	71	3100	LP472M035N250A □□
	5600	22	30	46	59	2720	LP562M035M300A □□
	5600	25	25	46	59	2800	LP562M035N250A □□
	6800	22	35	38	49	3600	LP682M035M350A □□
	6800	25	30	38	49	3700	LP682M035N300A □□
	6800	30	25	38	49	3800	LP682M035O250A □□
	8200	22	40	31	40	3900	LP822M035M400A □□
	8200	25	35	31	40	3950	LP822M035N350A □□
	8200	30	30	31	40	4100	LP822M035O300A □□
	10000	22	45	26	33	4150	LP103M035M450A □□
	10000	25	40	26	33	4680	LP103M035N400A □□
	10000	30	30	26	33	4580	LP103M035O300A □□
	12000	22	50	26	33	4700	LP123M035M500A □□

□□: See description at end of standard ratings

For further information please contact sales@capxon.org

STANDARD RATINGS

V_R (V)	C_R (µF)	ø D (mm)	L (mm)	Typ. ESR +20°C ▪ 120Hz (mΩ)	Max. ESR +20°C ▪ 120Hz (mΩ)	I_R ▪ Max. Ripple Current +85°C ▪ 120Hz (mA rms)	CapXon Part Number
35	12000	25	45	26	33	5100	LP123M035N450A □□
	12000	30	35	26	33	5150	LP123M035O350A □□
	12000	35	30	26	33	5250	LP123M035P300A □□
	15000	25	50	20	27	5300	LP153M035N500A □□
	15000	30	40	20	27	5720	LP153M035O400A □□
	15000	35	30	20	27	5720	LP153M035P300A □□
	18000	30	45	17	22	6100	LP183M035O450A □□
	18000	35	35	17	22	6100	LP183M035P350A □□
	22000	30	50	14	18	6500	LP223M035O500A □□
	22000	35	40	14	18	6550	LP223M035P400A □□
	27000	35	45	13	17	6800	LP273M035P450A □□
	33000	35	50	11	14	7200	LP333M035P500A □□
50	1000	22	20	210	270	1200	LP102M050M200A □□
	1500	22	25	140	180	1440	LP152M050M250A □□
	2200	22	25	92	120	2040	LP222M050M250A □□
	2700	22	30	76	98	2300	LP272M050M300A □□
	3300	22	30	62	80	2900	LP332M050M300A □□
	3300	25	25	62	80	3100	LP332M050N250A □□
	3900	22	30	52	68	2950	LP392M050M300A □□
	3900	25	25	52	68	3150	LP392M050N250A □□
	4700	22	35	43	56	3300	LP472M050M350A □□
	4700	25	30	43	56	3400	LP472M050N300A □□
	4700	30	25	43	56	3500	LP472M050O250A □□
	5600	22	40	36	47	3600	LP562M050M400A □□
	5600	25	40	36	47	3750	LP562M050N400A □□
	5600	30	30	36	47	3800	LP562M050O300A □□
	5600	35	25	36	47	3850	LP562M050P250A □□
	6800	22	50	30	39	4200	LP682M050M500A □□
	6800	25	40	30	39	4150	LP682M050N400A □□
	6800	30	30	30	39	4200	LP682M050O300A □□
	8200	25	45	25	32	4750	LP822M050N450A □□
	8200	30	35	25	32	4800	LP822M050O350A □□
	8200	35	30	25	32	4900	LP822M050P300A □□
	10000	25	50	20	27	5200	LP103M050N500A □□
	10000	30	40	20	27	5500	LP103M050O400A □□
	10000	35	30	20	27	5200	LP103M050P300A □□
	12000	30	45	26	33	5800	LP123M050O450A □□
	12000	35	35	26	33	6100	LP123M050P350A □□
	15000	30	50	20	27	6500	LP153M050O500A □□
	15000	35	40	20	27	6800	LP153M050P400A □□
	18000	30	50	17	22	7100	LP183M050O500A □□
	18000	35	45	17	22	7200	LP183M050P450A □□
	22000	35	50	14	18	7800	LP223M050P500A □□

□□: See description at end of standard ratings

For further information please contact sales@capxon.org

STANDARD RATINGS

V_R (V)	C_R (µF)	ø D (mm)	L (mm)	Typ. ESR +20°C ▪ 120Hz (mΩ)	Max. ESR +20°C ▪ 120Hz (mΩ)	I_R ▪ Max. Ripple Current +85°C ▪ 120Hz (mA rms)	CapXon Part Number
63	1000	22	20	210	270	1500	LP102M063M200A□□
	1500	22	25	140	180	1680	LP152M063M250A□□
	1800	22	25	120	150	2200	LP182M063M250A□□
	2200	22	30	92	120	2520	LP222M063M300A□□
	2200	25	25	92	120	2550	LP222M063N250A□□
	2700	22	35	76	98	2820	LP272M063M350A□□
	2700	25	30	76	98	2900	LP272M063N300A□□
	3300	22	35	62	80	3150	LP332M063M350A□□
	3300	25	30	62	80	3250	LP332M063N300A□□
	3300	30	25	62	80	3350	LP332M063O250A□□
	3900	22	40	52	68	3650	LP392M063M400A□□
	3900	25	35	52	68	3750	LP392M063N350A□□
	3900	30	30	52	68	3800	LP392M063O300A□□
	4700	22	45	43	56	3400	LP472M063M450A□□
	4700	25	35	43	56	3300	LP472M063N350A□□
	4700	30	30	43	56	3450	LP472M063O300A□□
	4700	35	25	43	56	3500	LP472M063P250A□□
	5600	25	45	36	47	4650	LP562M063N450A□□
	5600	30	35	36	47	4700	LP562M063O350A□□
	5600	35	30	36	47	4800	LP562M063P300A□□
	6800	25	50	30	39	5300	LP682M063N500A□□
	6800	30	40	30	39	5300	LP682M063O400A□□
	6800	35	30	30	39	5400	LP682M063P300A□□
	8200	30	40	25	32	5450	LP822M063O400A□□
	8200	35	35	25	32	5720	LP822M063P350A□□
	10000	30	50	20	27	6350	LP103M063O500A□□
	10000	35	40	20	27	6500	LP103M063P400A□□
	12000	35	45	21	28	6600	LP123M063P450A□□
	15000	35	50	17	22	6800	LP153M063P500A□□
80	680	22	20	220	290	1250	LP681M080M200A□□
	1000	22	25	150	200	1620	LP102M080M250A□□
	1200	22	25	130	170	1650	LP122M080M250A□□
	1500	22	30	100	130	2500	LP152M080M300A□□
	1500	25	25	100	130	2500	LP152M080N250A□□
	1800	22	30	85	110	2920	LP182M080M300A□□
	1800	25	25	85	110	3000	LP182M080N250A□□
	2200	22	35	70	90	3250	LP222M080M350A□□
	2200	25	30	70	90	3350	LP222M080N300A□□
	2200	30	25	70	90	3400	LP222M080O250A□□
	2700	22	40	57	74	3500	LP272M080M400A□□
	2700	25	35	57	74	3600	LP272M080N350A□□
	2700	30	30	57	74	3650	LP272M080O300A□□
	3300	22	45	46	60	3700	LP332M080M450A□□
	3300	25	40	46	60	3900	LP332M080N400A□□

□□: See description at end of standard ratings

For further information please contact sales@capxon.org

STANDARD RATINGS

V_R (V)	C_R (µF)	ø D (mm)	L (mm)	Typ. ESR +20°C ▪ 120Hz (mΩ)	Max. ESR +20°C ▪ 120Hz (mΩ)	I_R ▪ Max. Ripple Current +85°C ▪ 120Hz (mA rms)	CapXon Part Number
80	3300	30	30	46	60	3900	LP332M080O300A □□
	3900	22	50	39	51	4800	LP392M080M500A □□
	3900	25	45	39	51	4900	LP392M080N450A □□
	3900	30	35	39	51	4900	LP392M080O350A □□
	4700	25	50	33	42	5400	LP472M080N500A □□
	4700	30	40	33	42	5450	LP472M080O400A □□
	4700	35	30	33	42	5500	LP472M080P300A □□
	5600	30	45	27	36	5600	LP562M080O450A □□
	5600	35	35	27	36	5650	LP562M080P350A □□
	6800	30	50	23	29	5800	LP682M080O500A □□
	6800	35	40	23	29	5850	LP682M080P400A □□
	8200	35	50	19	24	6200	LP822M080P500A □□
	10000	35	50	15	20	6650	LP103M080P500A □□
	12000	35	60	13	17	7100	LP123M080P600A □□
100	470	22	20	320	420	1340	LP471M100M200A □□
	680	22	25	220	290	1530	LP681M100M250A □□
	820	22	25	180	240	1900	LP821M100M250A □□
	1000	22	25	150	200	2000	LP102M100M250A □□
	1000	25	25	150	200	1950	LP102M100N250A □□
	1200	22	30	130	170	2400	LP122M100M300A □□
	1200	25	25	130	170	2400	LP122M100N250A □□
	1500	22	35	100	130	2850	LP152M100M350A □□
	1500	25	30	100	130	2950	LP152M100N300A □□
	1500	30	25	100	130	3100	LP152M100O250A □□
	1800	22	40	85	110	3300	LP182M100M400A □□
	1800	25	35	85	110	3500	LP182M100N350A □□
	1800	30	30	85	110	3400	LP182M100O300A □□
	2700	22	50	57	74	3730	LP272M100M500A □□
	2700	25	40	57	74	3750	LP272M100N400A □□
	2700	30	35	57	74	4000	LP272M100O350A □□
	2700	35	30	57	74	4100	LP272M100P300A □□
	3300	25	50	46	60	4150	LP332M100N500A □□
	3300	30	35	46	60	3900	LP332M100O350A □□
	3300	30	40	46	60	4200	LP332M100O400A □□
	3300	35	30	46	60	4200	LP332M100P300A □□
	3900	30	40	39	51	4500	LP392M100O400A □□
	3900	30	45	39	51	4600	LP392M100O450A □□
	3900	35	30	39	51	4520	LP392M100P300A □□
	3900	35	35	39	51	4700	LP392M100P350A □□
	4700	30	45	33	42	5100	LP472M100O450A □□
	4700	30	50	33	42	5860	LP472M100O500A □□
	4700	35	35	33	42	5100	LP472M100P350A □□
	4700	35	40	33	42	5900	LP472M100P400A □□
	5600	30	50	27	36	5800	LP562M100O500A □□

□□: See description at end of standard ratings

For further information please contact sales@capxon.org

STANDARD RATINGS

V_R (V)	C_R (µF)	ø D (mm)	L (mm)	Typ. ESR +20°C ▪ 120Hz (mΩ)	Max. ESR +20°C ▪ 120Hz (mΩ)	I_R ▪ Max. Ripple Current +85°C ▪ 120Hz (mA rms)	CapXon Part Number
100	5600	35	40	27	36	5900	LP562M100P400A □□
	5600	35	45	27	36	6340	LP562M100P450A □□
	6800	35	45	23	29	6600	LP682M100P450A □□
	6800	35	50	23	29	6800	LP682M100P500A □□
	8200	35	60	19	24	7300	LP822M100P600A □□
160	180	22	20	650	1110	1120	LP181M160M200A □□
	220	22	20	530	900	1160	LP221M160M200A □□
	220	22	25	530	900	1200	LP221M160M250A □□
	270	22	25	440	740	1350	LP271M160M250A □□
	330	22	25	350	600	1390	LP331M160M250A □□
	330	22	30	350	600	1440	LP331M160M300A □□
	390	25	25	300	510	1660	LP391M160N250A □□
	470	22	30	250	420	1760	LP471M160M300A □□
	470	25	25	250	420	1780	LP471M160N250A □□
	560	22	25	210	360	2300	LP561M160M250A □□
	560	22	30	210	360	2400	LP561M160M300A □□
	680	22	30	170	290	2500	LP681M160M300A □□
	680	25	30	170	290	2550	LP681M160N300A □□
	820	22	35	140	240	2750	LP821M160M350A □□
	820	25	25	140	240	2530	LP821M160N250A □□
	1000	22	40	120	200	3000	LP102M160M400A □□
	1000	25	30	120	200	3000	LP102M160N300A □□
	1200	22	45	100	170	3260	LP122M160M450A □□
	1200	25	35	100	170	3250	LP122M160N350A □□
	1200	30	25	100	170	3050	LP122M160O250A □□
	1500	22	50	76	130	3730	LP152M160M500A □□
	1500	25	40	76	130	3730	LP152M160N400A □□
	1500	30	30	76	130	3730	LP152M160O300A □□
	1500	35	25	76	130	3500	LP152M160P250A □□
	1800	25	45	65	110	4200	LP182M160N450A □□
	1800	30	35	65	110	4200	LP182M160O350A □□
	1800	35	30	65	110	4300	LP182M160P300A □□
	2200	30	40	53	90	4780	LP222M160O400A □□
	2200	35	35	53	90	4850	LP222M160P350A □□
	2700	30	45	43	74	4900	LP272M160O450A □□
	2700	35	40	43	74	5450	LP272M160P400A □□
	3300	35	45	35	60	5750	LP332M160P450A □□
	3900	35	50	30	51	6000	LP392M160P500A □□
180	330	22	25	350	600	1430	LP331M180M250A □□
	390	22	30	300	510	1620	LP391M180M300A □□
	470	22	25	250	420	2090	LP471M180M250A □□
	470	22	30	250	420	1800	LP471M180M300A □□
	470	25	25	250	420	2000	LP471M180N250A □□
	560	22	30	210	360	2100	LP561M180M300A □□

□□: See description at end of standard ratings

For further information please contact sales@capxon.org

STANDARD RATINGS

V_R (V)	C_R (µF)	ø D (mm)	L (mm)	Typ. ESR +20°C ▪ 120Hz (mΩ)	Max. ESR +20°C ▪ 120Hz (mΩ)	I_R ▪ Max. Ripple Current +85°C ▪ 120Hz (mA rms)	CapXon Part Number
180	560	22	35	210	360	2100	LP561M180M350A □□
	560	25	30	210	360	2150	LP561M180N300A □□
	680	22	30	170	290	2500	LP681M180M300A □□
	680	22	40	170	290	2600	LP681M180M400A □□
	680	25	25	170	290	2510	LP681M180N250A □□
	680	30	25	170	290	2620	LP681M180O250A □□
	820	22	35	140	240	2760	LP821M180M350A □□
	820	25	30	140	240	2800	LP821M180N300A □□
	820	30	30	140	240	2570	LP821M180O300A □□
	1000	22	45	120	200	3000	LP102M180M450A □□
	1000	25	35	120	200	3000	LP102M180N350A □□
	1000	30	25	120	200	3000	LP102M180O250A □□
	1200	22	50	100	170	3310	LP122M180M500A □□
	1200	25	40	100	170	3310	LP122M180N400A □□
	1200	30	30	100	170	3300	LP122M180O300A □□
	1200	35	25	100	170	3400	LP122M180P250A □□
	1500	25	45	76	130	3830	LP152M180N450A □□
	1500	30	35	76	130	3850	LP152M180O350A □□
	1500	35	30	76	130	3830	LP152M180P300A □□
	1800	25	50	65	110	4320	LP182M180N500A □□
	1800	30	40	65	110	4320	LP182M180O400A □□
	1800	35	30	65	110	4350	LP182M180P300A □□
	2200	30	45	53	90	4920	LP222M180O450A □□
	2200	35	40	53	90	5120	LP222M180P400A □□
	2700	35	45	43	74	5520	LP272M180P450A □□
200	150	22	20	780	1330	960	LP151M200M200A □□
	180	22	20	650	1110	980	LP181M200M200A □□
	180	22	25	650	1110	1000	LP181M200M250A □□
	220	20	25	530	900	1200	LP221M200L250A □□
	220	22	25	530	900	1360	LP221M200M250A □□
	220	22	30	530	900	1380	LP221M200M300A □□
	270	22	25	440	740	1460	LP271M200M250A □□
	270	22	30	440	740	1500	LP271M200M300A □□
	330	20	35	350	600	1600	LP331M200L350A □□
	330	22	25	350	600	1700	LP331M200M250A □□
	330	22	30	350	600	1890	LP331M200M300A □□
	330	25	25	350	600	1920	LP331M200N250A □□
	390	22	25	300	510	1750	LP391M200M250A □□
	390	22	30	300	510	1920	LP391M200M300A □□
	390	25	25	300	510	1950	LP391M200N250A □□
	390	25	30	300	510	1950	LP391M200N300A □□
	470	22	25	250	420	1900	LP471M200M250A □□
	470	22	30	250	420	2090	LP471M200M300A □□
	470	25	25	250	420	2010	LP471M200N250A □□

□□: See description at end of standard ratings

For further information please contact sales@capxon.org

STANDARD RATINGS

V_R (V)	C_R (µF)	ø D (mm)	L (mm)	Typ. ESR +20°C ▪ 120Hz (mΩ)	Max. ESR +20°C ▪ 120Hz (mΩ)	I_R ▪ Max. Ripple Current +85°C ▪ 120Hz (mA rms)	CapXon Part Number
200	470	25	30	250	420	2230	LP471M200N300A □□
	560	22	30	210	360	2440	LP561M200M300A □□
	560	22	35	210	360	2500	LP561M200M350A □□
	560	25	25	210	360	2430	LP561M200N250A □□
	560	25	30	210	360	2500	LP561M200N300A □□
	680	22	35	170	290	2680	LP681M200M350A □□
	680	22	45	170	290	2900	LP681M200M450A □□
	680	25	30	170	290	2800	LP681M200N300A □□
	680	25	35	170	290	2980	LP681M200N350A □□
	680	30	25	170	290	2400	LP681M200O250A □□
	820	22	40	140	240	2930	LP821M200M400A □□
	820	22	45	140	240	3100	LP821M200M450A □□
	820	25	30	140	240	2930	LP821M200N300A □□
	820	25	35	140	240	3000	LP821M200N350A □□
	820	30	25	140	240	2950	LP821M200O250A □□
	820	30	30	140	240	3100	LP821M200O300A □□
	1000	22	45	120	200	3250	LP102M200M450A □□
	1000	22	50	120	200	3320	LP102M200M500A □□
	1000	25	35	120	200	3250	LP102M200N350A □□
	1000	30	30	120	200	3320	LP102M200O300A □□
	1000	35	25	120	200	3300	LP102M200P250A □□
	1200	22	50	100	170	3500	LP122M200M500A □□
	1200	25	40	100	170	3500	LP122M200N400A □□
	1200	30	30	100	170	3500	LP122M200O300A □□
	1200	30	35	100	170	3600	LP122M200O350A □□
	1500	25	50	76	130	4100	LP152M200N500A □□
	1500	30	35	76	130	3800	LP152M200O350A □□
	1500	35	30	76	130	3870	LP152M200P300A □□
	1800	30	40	65	110	3900	LP182M200O400A □□
	1800	30	45	65	110	4400	LP182M200O450A □□
	1800	35	35	65	110	4500	LP182M200P350A □□
	1800	35	45	65	110	5840	LP182M200P450A □□
	2200	30	50	53	90	5000	LP222M200O500A □□
	2200	35	40	53	90	4920	LP222M200P400A □□
	2700	35	45	43	74	5900	LP272M200P450A □□
	2700	35	50	43	74	6000	LP272M200P500A □□
	3300	35	50	35	60	6100	LP332M200P500A □□
250	120	22	20	980	1660	850	LP121M250M200A □□
	150	22	20	780	1330	900	LP151M250M200A □□
	150	22	25	780	1330	980	LP151M250M250A □□
	180	22	25	650	1110	1050	LP181M250M250A □□
	180	22	30	650	1110	1120	LP181M250M300A □□
	220	22	25	530	900	1260	LP221M250M250A □□
	270	22	25	440	740	1410	LP271M250M250A □□

□□: See description at end of standard ratings

For further information please contact sales@capxon.org

STANDARD RATINGS

V_R (V)	C_R (µF)	ø D (mm)	L (mm)	Typ. ESR +20°C ▪ 120Hz (mΩ)	Max. ESR +20°C ▪ 120Hz (mΩ)	I_R ▪ Max. Ripple Current +85°C ▪ 120Hz (mA rms)	CapXon Part Number
250	270	22	30	440	740	1600	LP271M250M300A □□
	330	22	30	350	600	1770	LP331M250M300A □□
	330	25	25	350	600	1780	LP331M250N250A □□
	390	22	30	300	510	2000	LP391M250M300A □□
	390	25	25	300	510	2000	LP391M250N250A □□
	470	22	35	250	420	2120	LP471M250M350A □□
	470	25	30	250	420	2110	LP471M250N300A □□
	470	30	30	250	420	2380	LP471M250O300A □□
	560	22	40	210	360	2260	LP561M250M400A □□
	560	25	30	210	360	2260	LP561M250N300A □□
	560	25	35	210	360	2320	LP561M250N350A □□
	560	30	25	210	360	2260	LP561M250O250A □□
	680	22	45	170	290	2810	LP681M250M450A □□
	680	25	35	170	290	2590	LP681M250N350A □□
	680	30	30	170	290	2510	LP681M250O300A □□
	820	22	50	150	250	2980	LP821M250M500A □□
	820	25	40	140	240	2980	LP821M250N400A □□
	820	30	30	140	240	2780	LP821M250O300A □□
	820	35	25	140	240	2780	LP821M250P250A □□
	1000	25	45	120	200	3330	LP102M250N450A □□
	1000	25	50	120	200	3540	LP102M250N500A □□
	1000	30	35	120	200	3330	LP102M250O350A □□
	1000	35	30	120	200	3330	LP102M250P300A □□
	1200	30	40	100	170	3670	LP122M250O400A □□
	1200	35	35	100	170	3800	LP122M250P350A □□
	1500	30	50	76	130	4450	LP152M250O500A □□
	1500	35	40	76	130	4450	LP152M250P400A □□
	1800	35	45	65	110	4560	LP182M250P450A □□
	2200	35	50	53	90	4760	LP222M250P500A □□
315	180	25	25	650	1110	1320	LP181M315N250A □□
	220	22	30	530	900	1420	LP221M315M300A □□
	270	25	30	440	740	1630	LP271M315N300A □□
	330	22	40	350	600	1830	LP331M315M400A □□
	330	25	30	350	600	1830	LP331M315N300A □□
	330	30	25	350	600	1850	LP331M315O250A □□
	390	22	45	300	510	2020	LP391M315M450A □□
	390	25	35	300	510	1980	LP391M315N350A □□
	390	30	30	300	510	2150	LP391M315O300A □□
	470	25	40	250	420	2280	LP471M315N400A □□
	470	30	30	250	420	2300	LP471M315O300A □□
	470	35	25	250	420	2350	LP471M315P250A □□
	560	25	45	210	360	2570	LP561M315N450A □□
	560	30	35	210	360	2570	LP561M315O350A □□
	560	35	30	210	360	2650	LP561M315P300A □□

□□: See description at end of standard ratings

For further information please contact sales@capxon.org

STANDARD RATINGS

V_R (V)	C_R (µF)	ø D (mm)	L (mm)	Typ. ESR +20°C ▪ 120Hz (mΩ)	Max. ESR +20°C ▪ 120Hz (mΩ)	I_R ▪ Max. Ripple Current +85°C ▪ 120Hz (mA rms)	CapXon Part Number
315	680	30	40	170	290	2880	LP681M315O400A □□
	680	35	35	170	290	2920	LP681M315P350A □□
	820	30	45	140	240	3260	LP821M315O450A □□
	820	35	40	140	240	3350	LP821M315P400A □□
	1000	30	50	120	200	3630	LP102M315O500A □□
	1000	35	45	120	200	3720	LP102M315P450A □□
350	100	22	25	1170	1990	760	LP101M350M250A □□
	120	22	25	980	1660	990	LP121M350M250A □□
	120	25	25	980	1660	1020	LP121M350N250A □□
	150	22	25	780	1330	1120	LP151M350M250A □□
	180	22	30	650	1110	1220	LP181M350M300A □□
	220	22	40	530	900	1410	LP221M350M400A □□
	220	25	35	530	900	1470	LP221M350N350A □□
	220	30	25	530	900	1480	LP221M350O250A □□
	270	22	40	440	740	1700	LP271M350M400A □□
	270	25	30	440	740	1670	LP271M350N300A □□
	330	22	45	350	600	1900	LP331M350M450A □□
	330	25	35	350	600	1890	LP331M350N350A □□
	330	35	30	350	600	1950	LP331M350P300A □□
	390	22	50	300	510	2080	LP391M350M500A □□
	390	25	40	300	510	2070	LP391M350N400A □□
	390	30	30	300	510	2090	LP391M350O300A □□
	390	35	25	300	510	2150	LP391M350P250A □□
	470	25	45	250	420	2410	LP471M350N450A □□
	470	30	35	250	420	2500	LP471M350O350A □□
	470	35	30	250	420	2550	LP471M350P300A □□
	560	25	50	210	360	2610	LP561M350N500A □□
	560	30	40	210	360	2630	LP561M350O400A □□
	560	35	30	210	360	2650	LP561M350P300A □□
	680	30	45	170	290	2970	LP681M350O450A □□
	680	35	35	170	290	3000	LP681M350P350A □□
	820	30	50	140	240	3260	LP821M350O500A □□
	820	35	45	140	240	3400	LP821M350P450A □□
	1000	35	50	120	200	3550	LP102M350P500A □□
385	82	22	25	1430	2430	750	LP820M385M250A □□
	100	22	30	1170	1990	850	LP101M385M300A □□
	120	22	30	980	1660	950	LP121M385M300A □□
	120	25	25	980	1660	980	LP121M385N250A □□
	150	22	35	780	1330	1120	LP151M385M350A □□
	150	25	30	780	1330	1150	LP151M385N300A □□
	180	22	40	650	1110	1210	LP181M385M400A □□
	180	25	35	650	1110	1250	LP181M385N350A □□
	180	30	25	650	1110	1310	LP181M385O250A □□
	220	22	45	530	900	1450	LP221M385M450A □□

□□: See description at end of standard ratings

For further information please contact sales@capxon.org

STANDARD RATINGS

V_R (V)	C_R (µF)	ø D (mm)	L (mm)	Typ. ESR +20°C ▪ 120Hz (mΩ)	Max. ESR +20°C ▪ 120Hz (mΩ)	I_R ▪ Max. Ripple Current +85°C ▪ 120Hz (mA rms)	CapXon Part Number
385	220	25	35	530	900	1450	LP221M385N350A □□
	220	30	30	530	900	1470	LP221M385O300A □□
	270	25	40	440	740	1590	LP271M385N400A □□
	270	30	35	440	740	1650	LP271M385O350A □□
	330	25	50	350	600	1850	LP331M385N500A □□
	330	30	40	350	600	1890	LP331M385O400A □□
	330	35	30	350	600	1910	LP331M385P300A □□
	390	30	40	300	510	2070	LP391M385O400A □□
	390	35	35	300	510	2100	LP391M385P350A □□
	470	30	50	250	420	2620	LP471M385O500A □□
	470	35	40	250	420	2840	LP471M385P400A □□
	560	35	45	210	360	2980	LP561M385P450A □□
	680	35	50	170	290	3710	LP681M385P500A □□
	680	40	40	170	290	3820	LP681M385Q400A □□
	820	35	55	140	240	4180	LP821M385P550A □□
	820	40	45	140	240	4250	LP821M385Q450A □□
	1000	35	65	120	200	4950	LP102M385P650A □□
	1000	40	50	120	200	4890	LP102M385Q500A □□
	1000	45	40	120	200	4850	LP102M385V400A □□
	1200	35	75	100	170	5680	LP122M385P750A □□
	1200	40	60	100	170	5550	LP122M385Q600A □□
	1200	45	45	100	170	5520	LP122M385V450A □□
	1500	35	90	76	130	6710	LP152M385P900A □□
	1500	40	70	76	130	6590	LP152M385Q700A □□
	1500	45	55	76	130	6550	LP152M385V550A □□
	1800	40	80	65	110	7230	LP182M385Q800A □□
	1800	45	60	65	110	7120	LP182M385V600A □□
	2200	40	95	53	90	8540	LP222M385Q950A □□
	2200	45	75	53	90	8310	LP222M385V750A □□
	2700	45	85	43	74	8910	LP272M385V850A □□
400	47	22	20	2490	4230	420	LP470M400M200A □□
	56	22	25	2090	3550	530	LP560M400M250A □□
	68	22	20	1720	2930	440	LP680M400M200A □□
	68	22	25	1720	2930	470	LP680M400M250A □□
	82	20	25	1430	2430	600	LP820M400L250A □□
	82	22	25	1430	2430	830	LP820M400M250A □□
	100	22	25	1170	1990	850	LP101M400M250A □□
	100	22	30	1170	1990	910	LP101M400M300A □□
	120	22	25	980	1660	1030	LP121M400M250A □□
	150	22	25	780	1330	1150	LP151M400M250A □□
	150	22	30	780	1330	1180	LP151M400M300A □□
	150	25	30	780	1330	1220	LP151M400N300A □□
	150	30	25	780	1330	1250	LP151M400O250A □□
	180	22	30	650	1110	1500	LP181M400M300A □□

□□: See description at end of standard ratings

For further information please contact sales@capxon.org

STANDARD RATINGS

V_R (V)	C_R (µF)	ø D (mm)	L (mm)	Typ. ESR +20°C ▪ 120Hz (mΩ)	Max. ESR +20°C ▪ 120Hz (mΩ)	I_R ▪ Max. Ripple Current +85°C ▪ 120Hz (mA rms)	CapXon Part Number
400	180	25	25	650	1110	1500	LP181M400N250A □□
	180	30	25	650	1110	1530	LP181M400O250A □□
	220	22	35	530	900	1700	LP221M400M350A □□
	220	25	30	530	900	1720	LP221M400N300A □□
	220	30	35	530	900	1750	LP221M400O350A □□
	270	22	40	440	740	1910	LP271M400M400A □□
	270	25	35	440	740	2000	LP271M400N350A □□
	270	30	25	440	740	1960	LP271M400O250A □□
	270	35	30	440	740	2050	LP271M400P300A □□
	330	22	50	350	600	2000	LP331M400M500A □□
	330	25	40	350	600	2000	LP331M400N400A □□
	330	30	30	350	600	2050	LP331M400O300A □□
	330	35	25	350	600	2200	LP331M400P250A □□
	330	35	30	350	600	2300	LP331M400P300A □□
	390	22	50	300	510	2100	LP391M400M500A □□
	390	25	45	300	510	2200	LP391M400N450A □□
	390	30	30	300	510	2100	LP391M400O300A □□
	390	30	35	300	510	2200	LP391M400O350A □□
	390	35	25	300	510	2300	LP391M400P250A □□
	390	35	30	300	510	2500	LP391M400P300A □□
	470	25	50	250	420	2700	LP471M400N500A □□
	470	30	35	250	420	2600	LP471M400O350A □□
	470	35	30	250	420	2600	LP471M400P300A □□
	560	30	40	210	360	2920	LP561M400O400A □□
	560	30	45	210	360	2920	LP561M400O450A □□
	560	35	35	210	360	2920	LP561M400P350A □□
	560	35	40	210	360	2950	LP561M400P400A □□
	680	30	45	170	290	3300	LP681M400O450A □□
	680	30	50	170	290	3400	LP681M400O500A □□
	680	35	35	170	290	3350	LP681M400P350A □□
	680	35	40	170	290	3400	LP681M400P400A □□
	820	35	45	140	240	3450	LP821M400P450A □□
	820	35	50	140	240	3500	LP821M400P500A □□
	1000	35	50	120	200	3940	LP102M400P500A □□
	1200	35	55	100	170	4450	LP122M400P550A □□
	1200	35	80	100	170	5600	LP122M400P800A □□
	1200	40	60	100	170	5330	LP122M400Q600A □□
	1200	45	50	100	170	5200	LP122M400V500A □□
	1500	35	95	76	130	6660	LP152M400P950A □□
	1500	40	75	76	130	6320	LP152M400Q750A □□
	1500	45	55	76	130	5920	LP152M400V550A □□
	2200	45	80	53	90	7900	LP222M400V800A □□
	2700	45	90	43	74	9090	LP272M400V900A □□

□□: See description at end of standard ratings

For further information please contact sales@capxon.org

STANDARD RATINGS

V_R (V)	C_R (µF)	ø D (mm)	L (mm)	Typ. ESR +20°C ▪ 120Hz (mΩ)	Max. ESR +20°C ▪ 120Hz (mΩ)	I_R ▪ Max. Ripple Current +85°C ▪ 120Hz (mA rms)	CapXon Part Number
420	47	22	20	3320	5640	480	LP470M420M200A □□
	56	22	25	2790	4740	530	LP560M420M250A □□
	68	22	25	2290	3900	730	LP680M420M250A □□
	68	22	30	2290	3900	680	LP680M420M300A □□
	82	22	25	1900	3230	880	LP820M420M250A □□
	82	22	30	1900	3230	920	LP820M420M300A □□
	82	25	25	1900	3230	950	LP820M420N250A □□
	100	22	25	1560	2650	1030	LP101M420M250A □□
	100	22	30	1560	2650	1070	LP101M420M300A □□
	100	25	25	1560	2650	1120	LP101M420N250A □□
	120	22	25	1300	2210	1080	LP121M420M250A □□
	120	22	30	1300	2210	1100	LP121M420M300A □□
	120	25	25	1300	2210	1100	LP121M420N250A □□
	150	22	30	1040	1770	1330	LP151M420M300A □□
	150	25	25	1040	1770	1350	LP151M420N250A □□
	150	25	30	1040	1770	1350	LP151M420N300A □□
	150	30	25	1040	1770	1390	LP151M420O250A □□
	180	22	35	860	1470	1500	LP181M420M350A □□
	180	25	30	860	1470	1500	LP181M420N300A □□
	180	30	25	860	1470	1550	LP181M420O250A □□
	220	22	40	710	1210	1780	LP221M420M400A □□
	220	25	35	710	1210	1800	LP221M420N350A □□
	220	30	25	710	1210	1830	LP221M420O250A □□
	270	22	45	580	980	1940	LP271M420M450A □□
	270	25	35	580	980	1940	LP271M420N350A □□
	270	25	40	580	980	1980	LP271M420N400A □□
	270	30	30	580	980	1940	LP271M420O300A □□
	270	35	35	580	980	2000	LP271M420P350A □□
	330	25	45	470	800	2150	LP331M420N450A □□
	330	30	40	470	800	2180	LP331M420O400A □□
	330	35	35	470	800	2210	LP331M420P350A □□
	330	35	40	470	800	2250	LP331M420P400A □□
	390	25	45	400	680	2350	LP391M420N450A □□
	390	30	40	400	680	2350	LP391M420O400A □□
	390	35	35	400	680	2430	LP391M420P350A □□
	390	35	40	400	680	2520	LP391M420P400A □□
	470	30	40	330	560	2600	LP471M420O400A □□
	470	30	45	330	560	2780	LP471M420O450A □□
	470	35	35	330	560	2780	LP471M420P350A □□
	470	35	40	330	560	2800	LP471M420P400A □□
	560	30	45	280	470	2850	LP561M420O450A □□
	560	35	40	280	470	2950	LP561M420P400A □□
	560	35	45	280	470	2970	LP561M420P450A □□
	560	40	40	280	470	2950	LP561M420Q400A □□

□□: See description at end of standard ratings

For further information please contact sales@capxon.org

STANDARD RATINGS

V_R (V)	C_R (µF)	ø D (mm)	L (mm)	Typ. ESR +20°C ▪ 120Hz (mΩ)	Max. ESR +20°C ▪ 120Hz (mΩ)	I_R ▪ Max. Ripple Current +85°C ▪ 120Hz (mA rms)	CapXon Part Number
420	680	35	45	230	390	3590	LP681M420P450A □□
	680	35	50	230	390	3620	LP681M420P500A □□
	680	40	45	230	390	3750	LP681M420Q450A □□
	820	35	50	190	320	4150	LP821M420P500A □□
	820	40	50	190	320	4230	LP821M420Q500A □□
	820	45	40	190	320	4320	LP821M420V400A □□
	1000	35	75	160	270	5010	LP102M420P750A □□
	1000	40	60	160	270	4910	LP102M420Q600A □□
	1000	45	45	160	270	4780	LP102M420V450A □□
	1200	35	85	130	220	5530	LP122M420P850A □□
	1200	40	70	130	220	5680	LP122M420Q700A □□
	1200	45	55	130	220	5480	LP122M420V550A □□
	1500	40	80	110	180	6380	LP152M420Q800A □□
	1500	45	65	110	180	6250	LP152M420V650A □□
	1800	40	95	88	150	7510	LP182M420Q950A □□
	1800	45	70	88	150	7210	LP182M420V700A □□
	2200	45	85	71	120	7880	LP222M420V850A □□
450	22	22	20	7090	12060	300	LP220M450M200A □□
	47	22	20	3320	5640	500	LP470M450M200A □□
	56	22	25	2790	4740	600	LP560M450M250A □□
	68	22	25	2290	3900	730	LP680M450M250A □□
	68	22	30	2290	3900	750	LP680M450M300A □□
	82	22	25	1900	3230	850	LP820M450M250A □□
	82	25	25	1900	3230	900	LP820M450N250A □□
	100	22	30	1560	2650	950	LP101M450M300A □□
	100	25	25	1560	2650	980	LP101M450N250A □□
	120	22	30	1300	2210	1100	LP121M450M300A □□
	120	25	25	1300	2210	1150	LP121M450N250A □□
	150	22	30	1040	1770	1390	LP151M450M300A □□
	150	22	35	1040	1770	1430	LP151M450M350A □□
	150	25	25	1040	1770	1430	LP151M450N250A □□
	150	30	25	1040	1770	1450	LP151M450O250A □□
	150	30	30	1040	1770	1470	LP151M450O300A □□
	180	22	35	860	1470	1350	LP181M450M350A □□
	180	25	30	860	1470	1380	LP181M450N300A □□
	180	25	35	860	1470	1410	LP181M450N350A □□
	180	30	25	860	1470	1380	LP181M450O250A □□
	220	22	40	710	1210	1560	LP221M450M400A □□
	220	25	35	710	1210	1610	LP221M450N350A □□
	220	25	40	710	1210	1650	LP221M450N400A □□
	220	30	25	710	1210	1610	LP221M450O250A □□
	220	30	30	710	1210	1650	LP221M450O300A □□
	220	35	25	710	1210	1650	LP221M450P250A □□
	270	22	45	580	980	1900	LP271M450M450A □□

□□: See description at end of standard ratings

For further information please contact sales@capxon.org

STANDARD RATINGS

V_R (V)	C_R (µF)	ø D (mm)	L (mm)	Typ. ESR +20°C ▪ 120Hz (mΩ)	Max. ESR +20°C ▪ 120Hz (mΩ)	I_R ▪ Max. Ripple Current +85°C ▪ 120Hz (mA rms)	CapXon Part Number
450	270	25	40	580	980	1920	LP271M450N400A □□
	270	25	45	580	980	1860	LP271M450N450A □□
	270	30	30	580	980	1880	LP271M450O300A □□
	270	35	25	580	980	1840	LP271M450P250A □□
	270	35	35	580	980	1920	LP271M450P350A □□
	330	25	45	470	800	2100	LP331M450N450A □□
	330	30	35	470	800	1980	LP331M450O350A □□
	330	30	40	470	800	2100	LP331M450O400A □□
	330	35	25	470	800	2000	LP331M450P250A □□
	330	35	30	470	800	2100	LP331M450P300A □□
	390	25	50	400	680	2300	LP391M450N500A □□
	390	30	35	400	680	2200	LP391M450O350A □□
	390	30	40	400	680	2300	LP391M450O400A □□
	390	35	30	400	680	2600	LP391M450P300A □□
	390	35	40	400	680	2540	LP391M450P400A □□
	470	30	40	330	560	2550	LP471M450O400A □□
	470	30	45	330	560	2580	LP471M450O450A □□
	470	35	35	330	560	2580	LP471M450P350A □□
	470	35	40	330	560	2600	LP471M450P400A □□
	470	35	45	330	560	2620	LP471M450P450A □□
	470	40	40	330	560	2650	LP471M450Q400A □□
	560	30	50	280	470	2830	LP561M450O500A □□
	560	35	40	280	470	2850	LP561M450P400A □□
	560	35	45	280	470	2880	LP561M450P450A □□
	560	40	45	280	470	3270	LP561M450Q450A □□
	680	30	55	230	390	3520	LP681M450O550A □□
	680	35	45	230	390	3520	LP681M450P450A □□
	680	40	50	230	390	3710	LP681M450Q500A □□
	680	45	40	230	390	3710	LP681M450V400A □□
	820	35	50	190	320	3750	LP821M450P500A □□
	820	35	70	190	320	4310	LP821M450P700A □□
	820	40	55	190	320	4300	LP821M450Q550A □□
	820	45	45	190	320	4140	LP821M450V450A □□
	1000	35	80	160	270	5300	LP102M450P800A □□
	1000	40	60	160	270	4710	LP102M450Q600A □□
	1000	40	65	160	270	4890	LP102M450Q650A □□
	1000	45	50	160	270	4710	LP102M450V500A □□
	1200	35	95	130	220	5850	LP122M450P950A □□
	1200	40	75	130	220	5550	LP122M450Q750A □□
	1200	45	60	130	220	5550	LP122M450V600A □□
	1500	40	90	110	180	6560	LP152M450Q900A □□
	1500	45	70	110	180	6270	LP152M450V700A □□
	1800	45	80	88	150	7120	LP182M450V800A □□
	2200	45	95	71	120	8280	LP222M450V950A □□

□□: See description at end of standard ratings

For further information please contact sales@capxon.org

STANDARD RATINGS

V_R (V)	C_R (µF)	ø D (mm)	L (mm)	Typ. ESR +20°C ▪ 120Hz (mΩ)	Max. ESR +20°C ▪ 120Hz (mΩ)	I_R ▪ Max. Ripple Current +85°C ▪ 120Hz (mA rms)	CapXon Part Number
500	56	22	25	2790	4740	650	LP560M500M250A □□
	68	22	30	2290	3900	750	LP680M500M300A □□
	68	25	25	2290	3900	750	LP680M500N250A □□
	68	25	30	2290	3900	780	LP680M500N300A □□
	82	22	35	1900	3230	880	LP820M500M350A □□
	82	25	30	1900	3230	900	LP820M500N300A □□
	82	30	30	1900	3230	920	LP820M500O300A □□
	100	22	40	1560	2650	960	LP101M500M400A □□
	100	25	30	1560	2650	980	LP101M500N300A □□
	100	30	30	1560	2650	1050	LP101M500O300A □□
	120	22	45	1300	2210	1100	LP121M500M450A □□
	120	25	40	1300	2210	1130	LP121M500N400A □□
	120	30	30	1300	2210	1160	LP121M500O300A □□
	150	22	50	1040	1770	1220	LP151M500M500A □□
	150	25	45	1040	1770	1270	LP151M500N450A □□
	150	30	30	1040	1770	1240	LP151M500O300A □□
	180	25	50	860	1470	1420	LP181M500N500A □□
	180	30	35	860	1470	1400	LP181M500O350A □□
	220	30	40	710	1210	1650	LP221M500O400A □□
	220	35	40	710	1210	1680	LP221M500P400A □□
	270	30	40	580	980	1500	LP271M500O400A □□
	270	35	40	580	980	1880	LP271M500P400A □□
	330	30	50	470	800	1950	LP331M500O500A □□
	330	35	50	470	800	2100	LP331M500P500A □□
	390	35	55	400	680	2350	LP391M500P550A □□
	390	40	45	400	680	2370	LP391M500Q450A □□
	470	35	60	330	560	2600	LP471M500P600A □□
	470	40	50	330	560	2600	LP471M500Q500A □□
	560	35	70	280	470	2510	LP561M500P700A □□
	560	40	55	280	470	2490	LP561M500Q550A □□
	680	40	65	230	390	2830	LP681M500Q650A □□
	680	45	50	230	390	2810	LP681M500V500A □□
	820	40	75	190	320	3220	LP821M500Q750A □□
	820	45	60	190	320	3200	LP821M500V600A □□
	1000	40	85	160	270	3660	LP102M500Q850A □□
	1000	45	70	160	270	3620	LP102M500V700A □□
	1200	45	80	130	220	4150	LP122M500V800A □□
	1500	45	100	110	180	4900	LP152M500VA00A □□
550	47	25	25	3320	5640	520	LP470M550N250A □□
	56	25	25	2790	4740	650	LP560M550N250A □□
	68	25	30	2290	3900	750	LP680M550N300A □□
	82	25	35	1900	3230	850	LP820M550N350A □□
	82	30	25	1900	3230	850	LP820M550O250A □□
	100	25	35	1560	2650	940	LP101M550N350A □□

□□: See description at end of standard ratings

For further information please contact sales@capxon.org

STANDARD RATINGS

V_R (V)	C_R (µF)	ø D (mm)	L (mm)	Typ. ESR +20°C ▪ 120Hz (mΩ)	Max. ESR +20°C ▪ 120Hz (mΩ)	I_R ▪ Max. Ripple Current +85°C ▪ 120Hz (mA rms)	CapXon Part Number
550	100	30	30	1560	2650	1050	LP101M550O300A ☐☐☐
	120	25	40	1300	2210	1080	LP121M550N400A ☐☐☐
	120	30	35	1300	2210	1180	LP121M550O350A ☐☐☐
	120	35	25	1300	2210	1180	LP121M550P250A ☐☐☐
	150	25	50	1040	1770	1280	LP151M550N500A ☐☐☐
	150	30	35	1040	1770	1300	LP151M550O350A ☐☐☐
	150	35	30	1040	1770	1450	LP151M550P300A ☐☐☐
	180	25	55	860	1470	1480	LP181M550N550A ☐☐☐
	180	30	40	860	1470	1480	LP181M550O400A ☐☐☐
	180	35	35	860	1470	1620	LP181M550P350A ☐☐☐
	220	30	50	710	1210	1850	LP221M550O500A ☐☐☐
	220	35	40	710	1210	1860	LP221M550P400A ☐☐☐
	270	30	55	580	980	2150	LP271M550O550A ☐☐☐
	270	35	45	580	980	2210	LP271M550P450A ☐☐☐
	330	35	50	470	800	2200	LP331M550P500A ☐☐☐
	390	35	55	400	680	2820	LP391M550P550A ☐☐☐
600	47	25	25	3320	5640	620	LP470M600N250A ☐☐☐
	56	25	30	2790	4740	710	LP560M600N300A ☐☐☐
	68	25	35	2290	3900	770	LP680M600N350A ☐☐☐
	68	30	25	2290	3900	780	LP680M600O250A ☐☐☐
	82	25	35	1900	3230	870	LP820M600N350A ☐☐☐
	82	30	30	1900	3230	920	LP820M600O300A ☐☐☐
	100	25	40	1560	2650	1000	LP101M600N400A ☐☐☐
	100	30	35	1560	2650	1100	LP101M600O350A ☐☐☐
	100	35	25	1560	2650	1100	LP101M600P250A ☐☐☐
	120	25	50	1300	2210	1200	LP121M600N500A ☐☐☐
	120	30	35	1300	2210	1180	LP121M600O350A ☐☐☐
	120	35	30	1300	2210	1300	LP121M600P300A ☐☐☐
	150	25	55	1040	1770	1360	LP151M600N550A ☐☐☐
	150	30	45	1040	1770	1470	LP151M600O450A ☐☐☐
	150	35	35	1040	1770	1520	LP151M600P350A ☐☐☐
	180	30	50	860	1470	1670	LP181M600O500A ☐☐☐
	180	35	40	860	1470	1710	LP181M600P400A ☐☐☐
	220	30	55	710	1210	1950	LP221M600O550A ☐☐☐
	220	35	45	710	1210	1950	LP221M600P450A ☐☐☐
	270	35	50	580	980	2250	LP271M600P500A ☐☐☐

☐☐☐: Enter **P6** for standard type ▪ 6mm pin length
☐☐☐: Enter **Z6** for 3-pin type ▪ 6mm pin length
☐☐☐: Enter **Y6** for multipin-type ▪ 6mm pin length
☐☐☐: Enter **P4** for standard type ▪ 4mm pin length
☐☐☐: Enter **Z4** for 3-pin type ▪ 4mm pin length
☐☐☐: Enter **Y4** for multipin type ▪ 4mm pin length

For further information please contact sales@capxon.org

DIMENSIONS ▪ All dimensions in mm

2-pin version ▪ Standard type

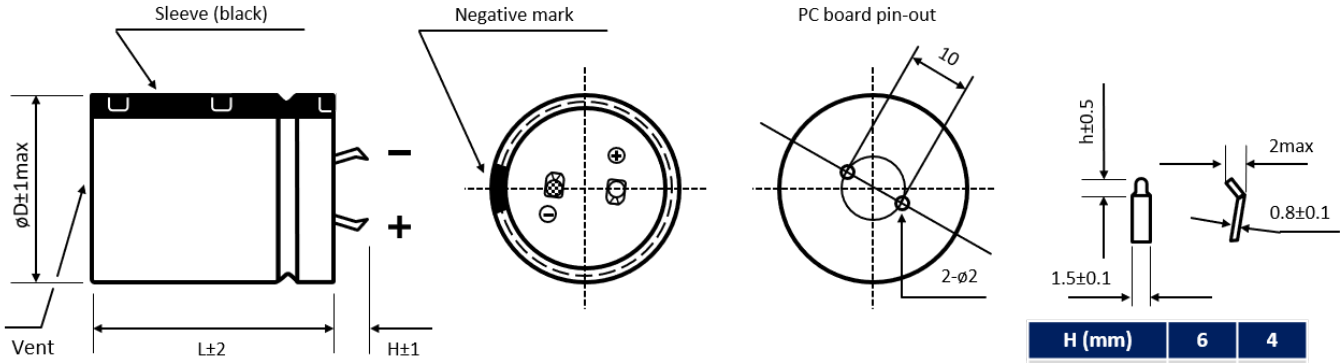

H (mm)	6	4
h (mm)	2.5	1.5

Standard: H = 6 ± 1mm. Also available H = 4 ± 1mm

3-pin version ▪ Polarity protection

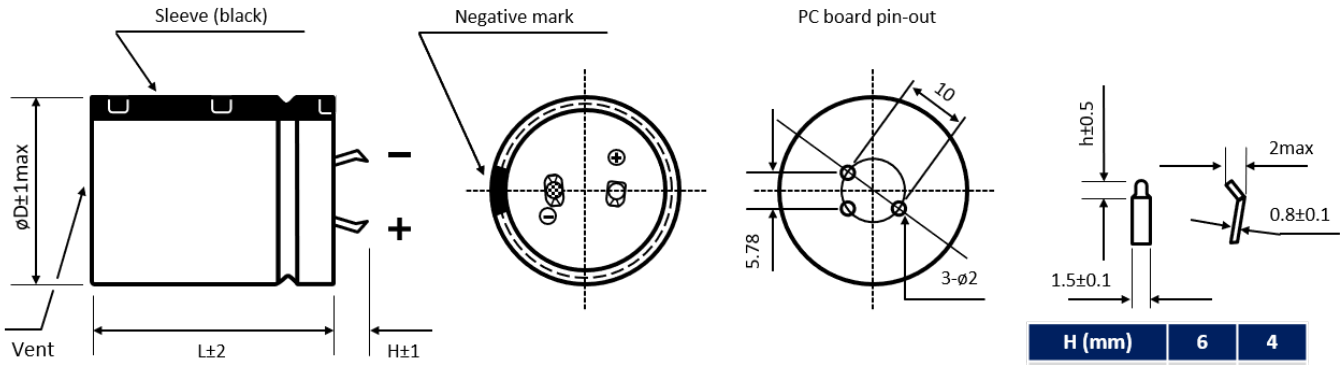

H (mm)	6	4
h (mm)	2.5	1.5

Standard: H = 4 ± 1mm. Also available H = 6 ± 1mm

Multipin version ▪ Diameter ø D ≥ 30 mm

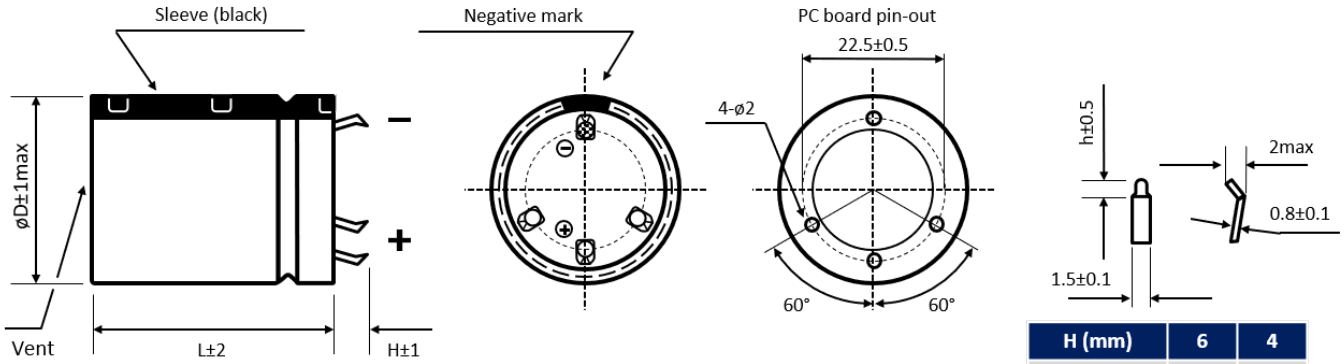

H (mm)	6	4
h (mm)	2.5	1.5

Standard: H = 6 ± 1mm. Also available H = 4 ± 1mm

Further possible terminal styles can be found in our packaging information liquid snap-in.

For further information please contact sales@capxon.org

MULTIPLIER K_f for RIPPLE CURRENT vs. FREQUENCY

V_R (V) / Frequency (Hz)	50/60	100/120	300	1k	10k	50k - 100k
$6.3 \le V_R \le 100$	0.88	1	1.07	1.15	1.15	1.15
$160 \le V_R \le 250$	0.81	1	1.17	1.32	1.45	1.5
$315 \le V_R \le 600$	0.77	1	1.16	1.3	1.41	1.43

PRECAUTIONS, GUIDELINES AND PACKAGING INFORMATON

Unless otherwise agreed in individual specifications, all products are subject to our “General Precautions and Guidelines” as well as our “Packaging Information”. Please refer to the following pages in the table.

General Precautions and Guidelines	Packaging Information Liquid Snap-In
Page 837	Page 579

For further information please contact sales@capxon.org

USEFUL LIFE

$V_R \leq 100V$

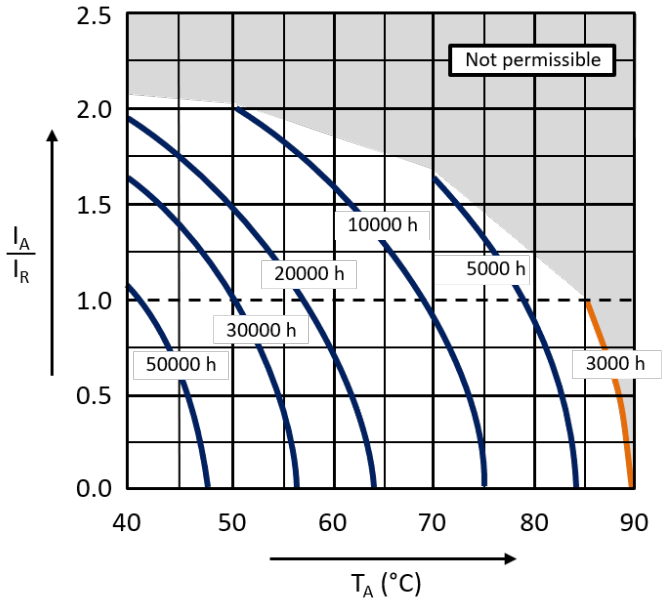

$V_R \geq 160V$

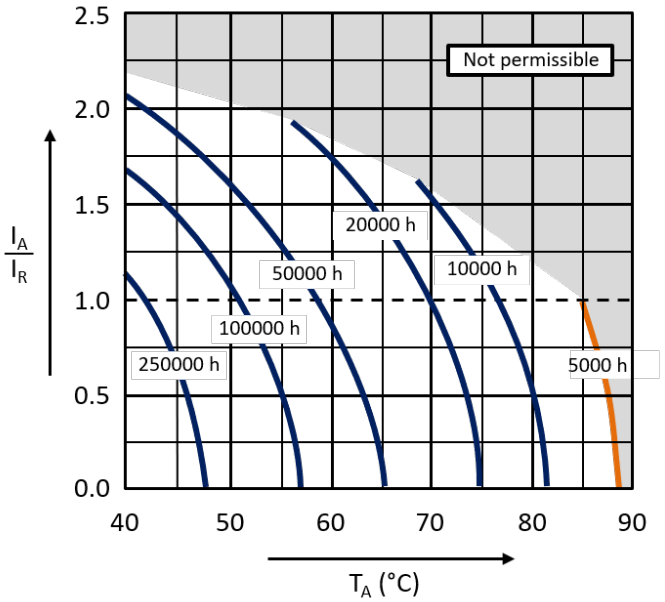

With: I_A: Application current
I_R: Rated ripple current (A RMS)
T_A: Application temperature of the capacitor

DISCLAIMER
All product related data (e.g. specification, statements and general information) are subject to change without any notice. It is necessary that the customer observes all product related technical / application information and handling instructions.

CapXon products are designed and manufactured according to severe quality and safety standards. Under no circumstance, CapXon warrants that any CapXon product is suitable for the purposes intended for your application, even CapXon knows the application. It is customer's duty and obligation to check and make sure that CapXon products are suitable for the purposes intended and select the correct and proper CapXon product. Customers are requested to perform a sufficient validation and reliability evaluation to assure needed safety level and reliability performance by suitable designs and to apply proper safeguards (e.g. redundancies, protective circuits).

Particular operating conditions (ambient temperature, ripple current, voltage, thermal resistance, etc.) as well as storage, production or assembly may affect the performance and the lifetime of the capacitor. Please consult CapXon for lifetime estimation, failure mode considerations or worst-case scenarios according to the product technology, product tolerances / deviations or change of the characteristics of the capacitor due to shipment, storage, handling, production and usage.

For aerospace or military application, life-saving, life-sustaining, safety critical applications or any application where failure may cause severe personal injury or death, please consult us before design-in the capacitor in your application.

Except for the written expressed warranties, CapXon does not impliedly, by assumption or whatever else, warrant, undertake, promise any other warranty or guaranty for any CapXon product.

For further information, please visit our website www.capxongroup.com or contact CapXon directly.

LT SERIES ▪ STANDARD, MULTI-PIN 85°C TYPE



KEY FEATURES

HIGH VOLTAGE

- **ALUMINUM ELECTROLYTIC CAPACITOR** ▪ Snap-In (Multi-Pin) type
- Useful life: 85°C ▪ 3 000 hours up to 5 000 hours
- Miniature dimensions
- High reliability
- Polarity-protected assembly

HF Halogen Free

RoHS & REACH COMPLIANT

SPECIFICATIONS

Recommendation LP series

Items		Performance Characteristics									
Operating Temperature Range		-40 ~ +85°C					-25 ~ +85°C				
Rated Voltage Range	V_R	16 ~ 350V DC					385 ~ 500V DC				
Surge Voltage	V_S	($V_R \le 315V$): $V_S = 1.15 \cdot V_R$					($V_R > 315V$): $V_S = 1.10 \cdot V_R$				
Capacitance Range	C_R	390 ~ 82000µF					220 ~ 2700µF				
Cap. Tolerance	ΔC	±20% (120Hz ▪ 20°C)									
Leakage Current (20°C ▪ V_R applied)	I_{LEAK}	≤ √3·C_R·V_R ▪ After 5 minutes [I_{LEAK} (µA) ; C_R (µF) ; V_R (V)]									
Dissipation Factor % (20°C ▪ 120Hz)	tanδ	µF / V DC	16	25	35	50	63	80	100	160 ~ 420	450 ~ 500
		≤ 8200	35	30	25	20	20	15	15	15	20
		10000 ~ 22000	40	35	30	30	25	20	-	-	-
		≥ 27000	40	35	35	30	25	-	-	-	-
Low Temperature Characteristics at 120Hz	Z ratio max.	V_R (V DC)	16	25	35 ~ 100		160 ~ 250		315 ~ 350		400 ~ 500
		Z-25°C/Z+20°C	5	4	4		4		8		8
		Z-40°C/Z+20°C	15	15	12		8		12		-

Lifetime Test		$V_R \le 100V$	$V_R > 100V$
Useful Life 85°C (V_R & I_R applied)	Test	**3 000 hours**	**5 000 hours**
	△C/C_R	≤ ±30% of initial measured value	≤ ±20% of initial measured value
	tanδ	≤ 300% of initial specified value	≤ 200% of initial specified value
	I_{Leak}	≤ the initial specified value	≤ the initial specified value
	Deviation Rate @ Useful Life: 10 000 FIT = 1%/1000h with 60% confidence level ▪ parts show higher drift as test criteria		
Endurance 85°C (V_R & I_R applied)	Test	**2 000 hours**	
	△C/C_R	≤ ±20% of initial measured value	≤ ±15% of initial measured value
	tanδ	≤ 200% of initial specified value	≤ 175% of initial specified value
	I_{Leak}	≤ the initial specified value	≤ the initial specified value
Shelf Life 85°C (V_R = 0)	Test	**1 000 hours**	
	△C/C_R	≤ ±20% of initial measured value	≤ ±15% of initial measured value
	tanδ	≤ 200% of initial specified value	≤ 175% of initial specified value
	I_{Leak}	≤ the initial specified value	≤ the initial specified value
	Before measurement: Restore capacitor to 20°C, apply V_R for 30 min according JIS-C-5101-4		
Vibration Resistance Test	Max. 10g force, f_{RANGE} 10Hz … 55Hz, amplitude 0.75mm; X/Y/Z-axis each 2h; capacitor rigidly clamped by body to surface ▪ IEC 60068-2-6		

For further information please contact sales@capxon.org

STANDARD RATINGS

NOT FOR NEW DESIGNS

V_R (V)	C_R (µF)	ø D (mm)	L (mm)	Typ. ESR +20°C ▪ 120Hz (mΩ)	Max. ESR +20°C ▪ 120Hz (mΩ)	I_R ▪ Max. Ripple Current +85°C ▪ 120Hz (mA rms)	CapXon Part Number
16	47000	35	30	9	11	5910	LT473M016P300A □□
	56000	35	60	7	10	6510	LT563M016P600A □□
	56000	40	50	7	10	6510	LT563M016Q500A □□
	68000	35	80	6	8	7230	LT683M016P800A □□
	68000	40	60	6	8	7230	LT683M016Q600A □□
	82000	40	80	5	7	8190	LT823M016Q800A □□
25	33000	35	50	11	14	5790	LT333M025P500A □□
	39000	35	60	9	12	6270	LT393M025P600A □□
	39000	40	50	9	12	6270	LT393M025Q500A □□
	47000	35	80	8	10	7110	LT473M025P800A □□
	47000	40	60	8	10	7110	LT473M025Q600A □□
	56000	40	80	6	8	7430	LT563M025Q800A □□
	68000	40	80	5	7	8580	LT683M025Q800A □□
35	22000	35	50	14	18	5010	LT223M035P500A □□
	27000	35	60	13	17	5850	LT273M035P600A □□
	33000	35	80	11	14	6030	LT333M035P800A □□
	33000	40	60	11	14	6410	LT333M035Q600A □□
	39000	35	80	9	12	6940	LT393M035P800A □□
	39000	40	60	9	12	7030	LT393M035Q600A □□
	47000	40	80	8	10	7550	LT473M035Q800A □□
50	15000	35	50	20	27	4560	LT153M050P500A □□
	18000	35	60	17	22	5100	LT183M050P600A □□
	18000	40	50	17	22	5100	LT183M050Q500A □□
	22000	35	80	14	18	5770	LT223M050P800A □□
	22000	40	60	14	18	5770	LT223M050Q600A □□
	27000	40	60	11	15	6190	LT273M050Q600A □□
63	12000	35	60	21	28	4680	LT123M063P600A □□
	12000	40	50	21	28	4830	LT123M063Q500A □□
	15000	35	80	17	22	4930	LT153M063P800A □□
	15000	40	60	17	22	5030	LT153M063Q600A □□
	18000	35	80	14	18	5890	LT183M063P800A □□
	18000	40	80	14	18	6030	LT183M063Q800A □□
80	4700	35	50	33	42	3230	LT472M080P500A □□
	6800	35	50	23	29	3650	LT682M080P500A □□
	8200	35	60	19	24	3950	LT822M080P600A □□
	8200	40	50	19	24	3950	LT822M080Q500A □□
	10000	35	80	15	20	4450	LT103M080P800A □□
	10000	40	60	15	20	4450	LT103M080Q600A □□
	12000	40	80	13	17	5130	LT123M080Q800A □□
	15000	40	80	10	13	5610	LT153M080Q800A □□
100	5600	35	60	27	36	3670	LT562M100P600A □□
	5600	40	50	27	36	3670	LT562M100Q500A □□
	6800	35	80	23	29	3970	LT682M100P800A □□
	6800	40	60	23	29	3970	LT682M100Q600A □□

□□: See description at end of standard ratings

For further information please contact sales@capxon.org

STANDARD RATINGS

NOT FOR NEW DESIGNS

V_R (V)	C_R (µF)	ø D (mm)	L (mm)	Typ. ESR +20°C ▪ 120Hz (mΩ)	Max. ESR +20°C ▪ 120Hz (mΩ)	I_R ▪ Max. Ripple Current +85°C ▪ 120Hz (mA rms)	CapXon Part Number
100	8200	40	80	19	24	4500	LT822M100Q800A □□
160	1800	35	50	61	110	2490	LT182M160P500A □□
	2200	35	60	50	90	2800	LT222M160P600A □□
	2200	40	50	50	90	2800	LT222M160Q500A □□
	2700	35	80	41	74	3030	LT272M160P800A □□
	2700	40	60	41	74	3030	LT272M160Q600A □□
	3300	40	80	33	60	3290	LT332M160Q800A □□
220	1000	35	50	110	200	2050	LT102M220P500A □□
	1200	35	50	94	170	2270	LT122M220P500A □□
	1500	35	60	72	130	2470	LT152M220P600A □□
	1800	35	80	61	110	2680	LT182M220P800A □□
	1800	40	60	61	110	2680	LT182M220Q600A □□
	2700	40	80	41	74	3060	LT272M220Q800A □□
250	390	35	50	280	510	1210	LT391M250P500A □□
	1000	35	60	110	200	2130	LT102M250P600A □□
	1200	35	60	94	170	2270	LT122M250P600A □□
	1200	40	50	94	170	2270	LT122M250Q500A □□
	1500	35	80	72	130	2400	LT152M250P800A □□
	1500	40	60	72	130	2400	LT152M250Q600A □□
	1800	40	80	61	110	2820	LT182M250Q800A □□
385	470	35	40	230	420	2870	LT471M385P400A □□
	560	35	45	200	360	3220	LT561M385P450A □□
	680	35	50	160	290	3670	LT681M385P500A □□
	680	40	40	160	290	3620	LT681M385Q400A □□
	820	35	55	130	240	4160	LT821M385P550A □□
	820	40	45	130	240	4090	LT821M385Q450A □□
	1000	35	65	110	200	4820	LT102M385P650A □□
	1000	40	50	110	200	4640	LT102M385Q500A □□
	1000	45	40	110	200	4480	LT102M385V400A □□
	1200	35	75	94	170	5530	LT122M385P750A □□
	1200	40	60	94	170	5320	LT122M385Q600A □□
	1200	45	45	94	170	5040	LT122M385V450A □□
	1500	35	90	72	130	6570	LT152M385P900A □□
	1500	40	70	72	130	6220	LT152M385Q700A □□
	1500	45	55	72	130	5910	LT152M385V550A □□
	1800	40	80	61	110	7090	LT182M385Q800A □□
	1800	45	60	61	110	6600	LT182M385V600A □□
	2200	40	95	50	90	8280	LT222M385Q950A □□
	2200	45	75	50	90	7750	LT222M385V750A □□
	2700	45	85	41	74	8900	LT272M385V850A □□
400	470	35	40	230	420	2880	LT471M400P400A □□
	560	35	45	200	360	3240	LT561M400P450A □□
	560	40	40	200	360	3290	LT561M400Q400A □□
	680	35	50	160	290	3690	LT681M400P500A □□

□□: See description at end of standard ratings

For further information please contact sales@capxon.org

STANDARD RATINGS

NOT FOR NEW DESIGNS

V_R (V)	C_R (µF)	ø D (mm)	L (mm)	Typ. ESR +20°C ▪ 120Hz (mΩ)	Max. ESR +20°C ▪ 120Hz (mΩ)	I_R ▪ Max. Ripple Current +85°C ▪ 120Hz (mA rms)	CapXon Part Number
400	680	40	40	160	290	3640	LT681M400Q400A □□
	820	35	60	130	240	4240	LT821M400P600A □□
	820	40	50	130	240	4190	LT821M400Q500A □□
	820	45	40	130	240	4130	LT821M400V400A □□
	1000	35	70	110	200	4900	LT102M400P700A □□
	1000	40	55	110	200	4750	LT102M400Q550A □□
	1000	45	45	110	200	4660	LT102M400V450A □□
	1200	35	80	94	170	5620	LT122M400P800A □□
	1200	40	60	94	170	5350	LT122M400Q600A □□
	1200	45	50	94	170	5220	LT122M400V500A □□
	1500	35	95	72	130	6680	LT152M400P950A □□
	1500	40	75	72	130	6340	LT152M400Q750A □□
	1500	45	55	72	130	5940	LT152M400V550A □□
	1800	40	85	61	110	7240	LT182M400Q850A □□
	1800	45	65	61	110	6790	LT182M400V650A □□
	2200	45	80	50	90	7930	LT222M400V800A □□
	2700	45	90	41	74	9110	LT272M400V900A □□
420	390	35	40	280	510	2470	LT391M420P400A □□
	470	35	45	230	420	2800	LT471M420P450A □□
	560	35	50	200	360	3150	LT561M420P500A □□
	560	40	40	200	360	3150	LT561M420Q400A □□
	680	35	55	160	290	3600	LT681M420P550A □□
	680	40	45	160	290	3570	LT681M420Q450A □□
	820	35	65	130	240	4130	LT821M420P650A □□
	820	40	50	130	240	4030	LT821M420Q500A □□
	820	45	40	130	240	3960	LT821M420V400A □□
	1000	35	75	110	200	4780	LT102M420P750A □□
	1000	40	60	110	200	4650	LT102M420Q600A □□
	1000	45	45	110	200	4480	LT102M420V450A □□
	1200	35	85	94	170	5490	LT122M420P850A □□
	1200	40	70	94	170	5300	LT122M420Q700A □□
	1200	45	55	94	170	5140	LT122M420V550A □□
	1500	40	80	72	130	6210	LT152M420Q800A □□
	1500	45	65	72	130	5990	LT152M420V650A □□
	1800	40	95	61	110	7150	LT182M420Q950A □□
	1800	45	70	61	110	6720	LT182M420V700A □□
	2200	45	85	50	90	7830	LT222M420V850A □□
450	330	35	40	440	800	2290	LT331M450P400A □□
	390	35	40	380	680	2560	LT391M450P400A □□
	470	35	45	310	560	2900	LT471M450P450A □□
	470	40	40	310	560	2940	LT471M450Q400A □□
	560	35	55	260	470	3300	LT561M450P550A □□
	560	40	45	260	470	3300	LT561M450Q450A □□
	680	35	60	220	390	3770	LT681M450P600A □□

□□: See description at end of standard ratings

For further information please contact sales@capxon.org

STANDARD RATINGS

NOT FOR NEW DESIGNS

V_R (V)	C_R (µF)	ø D (mm)	L (mm)	Typ. ESR +20°C ▪ 120Hz (mΩ)	Max. ESR +20°C ▪ 120Hz (mΩ)	I_R ▪ Max. Ripple Current +85°C ▪ 120Hz (mA rms)	CapXon Part Number
450	680	40	50	220	390	3740	LT681M450Q500A □□
	680	45	40	220	390	3700	LT681M450V400A □□
	820	35	70	180	320	4340	LT821M450P700A □□
	820	40	55	180	320	4230	LT821M450Q550A □□
	820	45	45	180	320	4170	LT821M450V450A □□
	1000	35	80	150	270	5040	LT102M450P800A □□
	1000	40	60	150	270	4740	LT102M450Q600A □□
	1000	40	65	150	270	4870	LT102M450Q650A □□
	1000	45	50	150	270	4710	LT102M450V500A □□
	1200	35	95	120	220	5820	LT122M450P950A □□
	1200	40	75	120	220	5560	LT122M450Q750A □□
	1200	45	60	120	220	5390	LT122M450V600A □□
	1500	40	90	100	180	6590	LT152M450Q900A □□
	1500	45	70	100	180	6280	LT152M450V700A □□
	1800	45	80	83	150	7150	LT182M450V800A □□
	2200	45	95	67	120	8310	LT222M450V950A □□
500	220	35	40	670	1210	1300	LT221M500P400A □□
	270	35	45	540	980	1480	LT271M500P450A □□
	330	35	50	440	800	1690	LT331M500P500A □□
	330	40	40	440	800	1720	LT331M500Q400A □□
	390	35	55	380	680	1900	LT391M500P550A □□
	390	40	45	380	680	1920	LT391M500Q450A □□
	470	35	60	310	560	2160	LT471M500P600A □□
	470	40	50	310	560	2160	LT471M500Q500A □□
	470	45	40	310	560	2170	LT471M500V400A □□
	560	35	70	260	470	2460	LT561M500P700A □□
	560	40	55	260	470	2430	LT561M500Q550A □□
	560	45	45	260	470	2430	LT561M500V450A □□
	680	35	80	220	390	2840	LT681M500P800A □□
	680	40	65	220	390	2790	LT681M500Q650A □□
	680	45	50	220	390	2750	LT681M500V500A □□
	820	35	95	180	320	3290	LT821M500P950A □□
	820	40	75	180	320	3190	LT821M500Q750A □□
	820	45	60	180	320	3140	LT821M500V600A □□
	1000	40	85	150	270	3690	LT102M500Q850A □□
	1000	45	70	150	270	3610	LT102M500V700A □□
	1200	45	80	120	220	4110	LT122M500V800A □□
	1500	45	100	100	180	4860	LT152M500VA00A □□

□□: Enter **Y6** for multipin-type ▪ 6mm pin length □□: Enter **Y4** for multipin type ▪ 4mm pin length

For further information please contact sales@capxon.org

DIMENSIONS ▪ All dimensions in mm

Multi-pin version ▪ Standard type

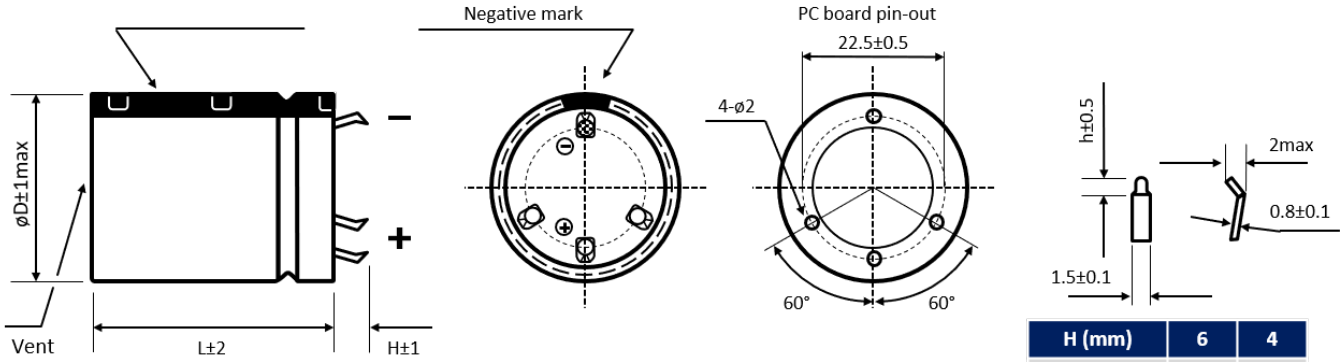

H (mm)	6	4
h (mm)	2.5	1.5

Standard: H = 6 ± 1mm. Also available H = 4 ± 1mm

MULTIPLIER K_f for RIPPLE CURRENT vs. FREQUENCY

V_R (V) / Frequency (Hz)	50/60	100/120	300	1k	10k	50k - 100k
$16 \le V_R \le 100$	0.88	1	1.07	1.15	1.15	1.15
$160 \le V_R \le 250$	0.81	1	1.17	1.32	1.45	1.5
$315 \le V_R \le 500$	0.77	1	1.16	1.3	1.41	1.43

PRECAUTIONS, GUIDELINES AND PACKAGING INFORMATON

Unless otherwise agreed in individual specifications, all products are subject to our “General Precautions and Guidelines” as well as our “Packaging Information”. Please refer to the following pages in the table.

General Precautions and Guidelines	Packaging Information Liquid Snap-In
Page 837	Page 579

For further information please contact sales@capxon.org

USEFUL LIFE

$V_R \leq 100V$

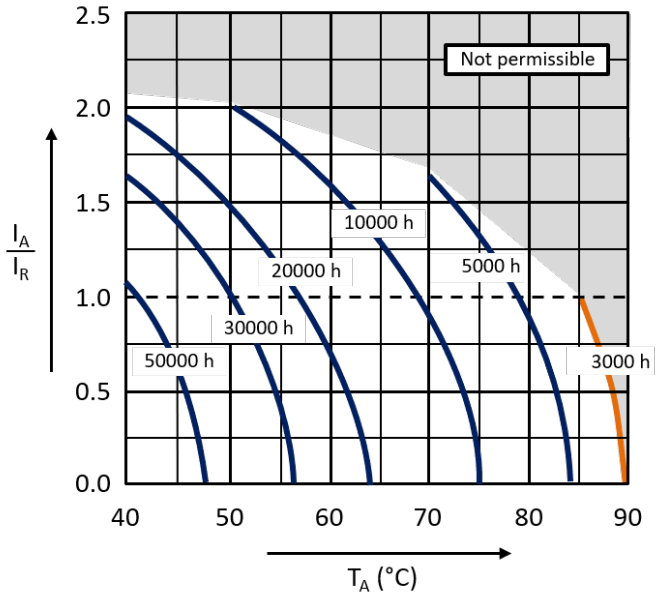

$V_R \geq 160V$

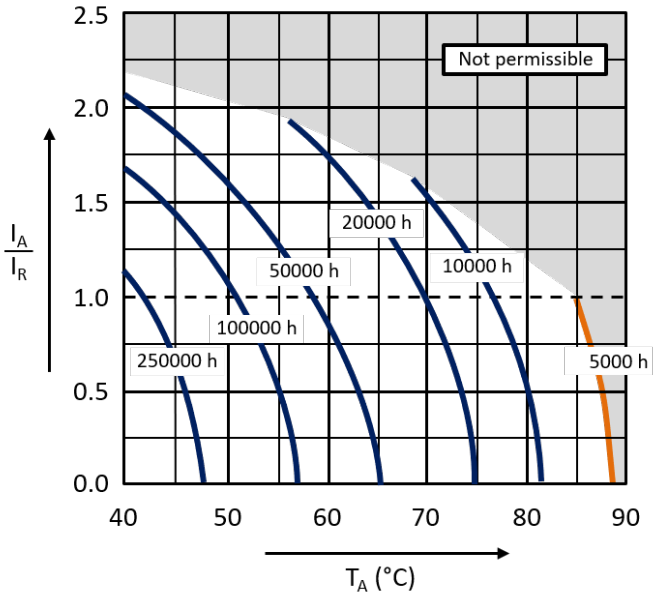

With: I_A: Application current
I_R: Rated ripple current (A RMS)
T_A: Application temperature of the capacitor

DISCLAIMER
All product related data (e.g. specification, statements and general information) are subject to change without any notice. It is necessary that the customer observes all product related technical / application information and handling instructions.

CapXon products are designed and manufactured according to severe quality and safety standards. Under no circumstance, CapXon warrants that any CapXon product is suitable for the purposes intended for your application, even CapXon knows the application. It is customer's duty and obligation to check and make sure that CapXon products are suitable for the purposes intended and select the correct and proper CapXon product. Customers are requested to perform a sufficient validation and reliability evaluation to assure needed safety level and reliability performance by suitable designs and to apply proper safeguards (e.g. redundancies, protective circuits).

Particular operating conditions (ambient temperature, ripple current, voltage, thermal resistance, etc.) as well as storage, production or assembly may affect the performance and the lifetime of the capacitor. Please consult CapXon for lifetime estimation, failure mode considerations or worst-case scenarios according to the product technology, product tolerances / deviations or change of the characteristics of the capacitor due to shipment, storage, handling, production and usage.

For aerospace or military application, life-saving, life-sustaining, safety critical applications or any application where failure may cause severe personal injury or death, please consult us before design-in the capacitor in your application.

Except for the written expressed warranties, CapXon does not impliedly, by assumption or whatever else, warrant, undertake, promise any other warranty or guaranty for any CapXon product.

For further information, please visit our website www.capxongroup.com or contact CapXon directly.

UB SERIES ▪ LONG LIFE 85°C TYPE



KEY FEATURES

HIGH VOLTAGE · LONG LIFE

- **ALUMINUM ELECTROLYTIC CAPACITOR** ▪ Snap-In type
- Useful life: 85°C ▪ 5 000 hours
- Extremely stable dissipation factor and leakage current
- High voltage up to 500V
- Especially for applications with demanding operating environment

HF Halogen Free · RoHS & REACH COMPLIANT

SPECIFICATIONS

Items		Performance Characteristics			
Operating Temperature Range		-40 ~ +85°C		-25 ~ +85°C	
Rated Voltage Range	V_R	200 ~ 450V DC		500V DC	
Surge Voltage	V_S	($V_R \le 315V$) ▪ $V_S = 1.15 \cdot V_R$		($V_R > 315V$) ▪ $V_S = 1.10 \cdot V_R$	
Capacitance Range	C_R	68 ~ 3300µF		100 ~ 1500µF	
Cap. Tolerance	ΔC	±20% (120Hz ▪ 20°C)			
Leakage Current (20°C ▪ V_R applied)	I_{LEAK}	≤ √3·C_R·V_R ▪ After 5 minutes [I_{LEAK} (µA) ; C_R (µF) ; V_R (V)]			
Dissipation Factor % (20°C ▪ 120Hz)	tanδ	V_R (V DC)	200 ~ 400	450 ~ 500	
		tanδ	15	20	
Self-Resistance (20°C ▪ 120Hz)	ESR	Not to exceed the values shown in standard ratings			
Low Temperature Characteristics at 120Hz	Z ratio max.	V_R (V DC)	200 ~ 250	315 ~ 450	500
		Z-25°C/Z+20°C	4	5	6
		Z-40°C/Z+20°C	7	10	-

Lifetime Test		
Useful Life 85°C (V_R & I_R applied)	Test	**5 000 hours**
	△C/C_R	≤ ±20% of initial measured value
	tanδ	≤ 200% of initial specified value
	I_{Leak}	≤ the initial specified value
	Deviation Rate @ Useful Life: 10 000 FIT = 1%/1000h with 60% confidence level ▪ parts show higher drift as test criteria	
Endurance 85°C (V_R & I_R applied)	Test	**2 000 hours**
	△C/C_R	≤ ±15% of initial measured value
	tanδ	≤ 175% of initial specified value
	I_{Leak}	≤ the initial specified value
Shelf Life 85°C (V_R = 0)	Test	**1 000 hours**
	△C/C_R	≤ ±15% of initial measured value
	tanδ	≤ 175% of initial specified value
	I_{Leak}	≤ the initial specified value
	Before measurement: Restore capacitor to 20°C, apply V_R for 30 min according JIS-C-5101-4	
Vibration Resistance Test	Max. 10g force, f_{RANGE} 10Hz … 55Hz, amplitude 0.75mm; X/Y/Z-axis each 2h; capacitor rigidly clamped by body to surface ▪ IEC 60068-2-6	

For further information please contact sales@capxon.org

STANDARD RATINGS

V_R (V)	C_R (µF)	ø D (mm)	L (mm)	Typ. ESR +20°C ▪ 120Hz (mΩ)	Max. ESR +20°C ▪ 120Hz (mΩ)	I_R ▪ Max. Ripple Current +85°C ▪ 120Hz (mA rms)	CapXon Part Number
200	120	22	25	980	1660	1100	UB121M200M250A □□
	220	22	25	530	900	1150	UB221M200M250A □□
	270	22	30	440	740	1300	UB271M200M300A □□
	330	22	30	350	600	1500	UB331M200M300A □□
	330	25	25	350	600	1500	UB331M200N250A □□
	390	22	35	300	510	1650	UB391M200M350A □□
	390	25	30	300	510	1700	UB391M200N300A □□
	470	22	40	250	420	1950	UB471M200M400A □□
	470	25	30	250	420	1800	UB471M200N300A □□
	470	30	25	250	420	1900	UB471M200O250A □□
	560	22	45	210	360	2150	UB561M200M450A □□
	560	25	35	210	360	2120	UB561M200N350A □□
	560	30	30	210	360	2200	UB561M200O300A □□
	560	35	20	210	360	2100	UB561M200P200A □□
	680	22	45	170	290	2350	UB681M200M450A □□
	680	25	40	170	290	2400	UB681M200N400A □□
	680	30	35	170	290	2500	UB681M200O350A □□
	680	35	20	170	290	2320	UB681M200P200A □□
	820	25	40	140	240	2650	UB821M200N400A □□
	820	30	35	140	240	2730	UB821M200O350A □□
	820	35	25	140	240	2820	UB821M200P250A □□
	1000	25	40	120	200	2720	UB102M200N400A □□
	1000	30	40	120	200	3150	UB102M200O400A □□
	1000	35	30	120	200	3000	UB102M200P300A □□
	1200	30	45	100	170	3500	UB122M200O450A □□
	1200	35	35	100	170	3500	UB122M200P350A □□
	1500	25	50	76	130	3740	UB152M200N500A □□
	1500	30	45	76	130	3930	UB152M200O450A □□
	1500	35	40	76	130	3930	UB152M200P400A □□
	1800	35	40	65	110	4100	UB182M200P400A □□
	2200	35	50	53	90	4250	UB222M200P500A □□
	3300	35	60	35	60	4400	UB332M200P600A □□
250	100	22	25	1170	1990	720	UB101M250M250A □□
	180	22	25	650	1110	1000	UB181M250M250A □□
	220	22	30	530	900	1150	UB221M250M300A □□
	220	25	25	530	900	1150	UB221M250N250A □□
	270	22	30	440	740	1280	UB271M250M300A □□
	330	22	30	350	600	1360	UB331M250M300A □□
	330	25	30	350	600	1420	UB331M250N300A □□
	330	30	25	350	600	1530	UB331M250O250A □□
	390	22	45	300	510	1720	UB391M250M450A □□
	390	25	35	300	510	1700	UB391M250N350A □□
	390	30	25	300	510	1690	UB391M250O250A □□
	470	22	50	250	420	2010	UB471M250M500A □□

□□: See description at end of standard ratings

For further information please contact sales@capxon.org

STANDARD RATINGS

V_R (V)	C_R (µF)	ø D (mm)	L (mm)	Typ. ESR +20°C ▪ 120Hz (mΩ)	Max. ESR +20°C ▪ 120Hz (mΩ)	I_R ▪ Max. Ripple Current +85°C ▪ 120Hz (mA rms)	CapXon Part Number
250	470	25	40	250	420	1890	UB471M250N400A □□
	470	30	30	250	420	1870	UB471M250O300A □□
	470	35	20	250	420	1860	UB471M250P200A □□
	560	25	45	210	360	2250	UB561M250N450A □□
	560	30	35	210	360	2250	UB561M250O350A □□
	560	35	25	210	360	2220	UB561M250P250A □□
	680	25	50	170	290	2650	UB681M250N500A □□
	680	30	40	170	290	2650	UB681M250O400A □□
	680	35	30	170	290	2610	UB681M250P300A □□
	820	30	40	140	240	2950	UB821M250O400A □□
	820	35	35	140	240	2920	UB821M250P350A □□
	1000	30	40	120	200	3180	UB102M250O400A □□
	1000	35	35	120	200	3250	UB102M250P350A □□
	1200	30	45	100	170	3580	UB122M250O450A □□
	1200	35	40	100	170	3580	UB122M250P400A □□
	1500	30	50	76	130	3940	UB152M250O500A □□
	1500	35	45	76	130	4300	UB152M250P450A □□
	1800	35	45	65	110	4460	UB182M250P450A □□
	2200	35	50	53	90	4670	UB222M250P500A □□
315	100	22	25	1170	1990	720	UB101M315M250A □□
	150	22	30	780	1330	900	UB151M315M300A □□
	150	25	25	780	1330	900	UB151M315N250A □□
	180	22	35	650	1110	1000	UB181M315M350A □□
	180	25	30	650	1110	1020	UB181M315N300A □□
	220	22	40	530	900	1150	UB221M315M400A □□
	220	25	35	530	900	1180	UB221M315N350A □□
	220	30	25	530	900	1120	UB221M315O250A □□
	270	22	45	440	740	1230	UB271M315M450A □□
	270	25	40	440	740	1350	UB271M315N400A □□
	270	30	30	440	740	1330	UB271M315O300A □□
	270	35	25	440	740	1380	UB271M315P250A □□
	330	25	45	350	600	1600	UB331M315N450A □□
	330	30	35	350	600	1600	UB331M315O350A □□
	390	35	30	300	510	1700	UB391M315P300A □□
	470	30	45	250	420	2090	UB471M315O450A □□
	470	35	35	250	420	2030	UB471M315P350A □□
	560	30	50	210	360	2300	UB561M315O500A □□
	560	35	40	210	360	2270	UB561M315P400A □□
	680	35	45	170	290	2360	UB681M315P450A □□
350	82	22	25	1430	2430	700	UB820M350M250A □□
	100	22	25	1170	1990	790	UB101M350M250A □□
	120	22	30	980	1660	840	UB121M350M300A □□
	120	25	25	980	1660	840	UB121M350N250A □□
	150	22	35	780	1330	980	UB151M350M350A □□

□□: See description at end of standard ratings

For further information please contact sales@capxon.org

STANDARD RATINGS

V_R (V)	C_R (µF)	ø D (mm)	L (mm)	Typ. ESR +20°C ▪ 120Hz (mΩ)	Max. ESR +20°C ▪ 120Hz (mΩ)	I_R ▪ Max. Ripple Current +85°C ▪ 120Hz (mA rms)	CapXon Part Number
350	150	25	30	780	1330	1010	UB151M350N300A □□
	180	22	40	650	1110	1180	UB181M350M400A □□
	180	25	35	650	1110	1150	UB181M350N350A □□
	180	30	30	650	1110	1150	UB181M350O300A □□
	220	22	45	530	900	1250	UB221M350M450A □□
	220	25	35	530	900	1230	UB221M350N350A □□
	220	30	30	530	900	1280	UB221M350O300A □□
	220	35	25	530	900	1330	UB221M350P250A □□
	270	25	45	440	740	1460	UB271M350N450A □□
	270	30	35	440	740	1460	UB271M350O350A □□
	330	25	50	350	600	1680	UB331M350N500A □□
	330	35	30	350	600	1650	UB331M350P300A □□
	390	30	40	300	510	1770	UB391M350O400A □□
	390	35	35	300	510	1830	UB391M350P350A □□
	470	30	45	250	420	2110	UB471M350O450A □□
	470	35	40	250	420	2160	UB471M350P400A □□
	560	35	45	210	360	2380	UB561M350P450A □□
	680	35	50	170	290	2660	UB681M350P500A □□
	820	35	60	140	240	2870	UB821M350P600A □□
400	68	22	20	1720	2930	580	UB680M400M200A □□
	82	22	25	1430	2430	720	UB820M400M250A □□
	100	22	30	1170	1990	860	UB101M400M300A □□
	100	25	25	1170	1990	860	UB101M400N250A □□
	120	22	30	980	1660	870	UB121M400M300A □□
	120	25	25	980	1660	870	UB121M400N250A □□
	150	22	30	780	1330	1030	UB151M400M300A □□
	150	25	30	780	1330	1070	UB151M400N300A □□
	150	30	25	780	1330	1070	UB151M400O250A □□
	180	22	45	650	1110	1200	UB181M400M450A □□
	180	25	35	650	1110	1190	UB181M400N350A □□
	180	30	30	650	1110	1210	UB181M400O300A □□
	180	35	25	650	1110	1260	UB181M400P250A □□
	220	22	50	530	900	1690	UB221M400M500A □□
	220	25	40	530	900	1690	UB221M400N400A □□
	220	30	30	530	900	1690	UB221M400O300A □□
	220	35	25	530	900	1620	UB221M400P250A □□
	270	25	40	440	740	1700	UB271M400N400A □□
	270	30	35	440	740	1800	UB271M400O350A □□
	270	35	30	440	740	1800	UB271M400P300A □□
	330	22	50	350	600	1820	UB331M400M500A □□
	330	30	40	350	600	1900	UB331M400O400A □□
	330	35	35	350	600	2000	UB331M400P350A □□
	390	30	40	300	510	2050	UB391M400O400A □□
	390	35	35	300	510	2170	UB391M400P350A □□

□□: See description at end of standard ratings

For further information please contact sales@capxon.org

STANDARD RATINGS

V_R (V)	C_R (µF)	ø D (mm)	L (mm)	Typ. ESR +20°C ▪ 120Hz (mΩ)	Max. ESR +20°C ▪ 120Hz (mΩ)	I_R ▪ Max. Ripple Current +85°C ▪ 120Hz (mA rms)	CapXon Part Number
400	470	30	50	250	420	3030	UB471M400O500A □□
	470	35	40	250	420	2950	UB471M400P400A □□
	470	35	45	250	420	3110	UB471M400P450A □□
	560	30	50	210	360	3330	UB561M400O500A □□
	560	35	40	210	360	3280	UB561M400P400A □□
	560	35	45	210	360	3390	UB561M400P450A □□
	560	40	40	210	360	3420	UB561M400Q400A □□
	680	30	60	170	290	3810	UB681M400O600A □□
	680	35	45	170	290	3710	UB681M400P450A □□
	680	35	50	170	290	3850	UB681M400P500A □□
	680	40	40	170	290	3780	UB681M400Q400A □□
	820	35	55	140	240	4190	UB821M400P550A □□
	820	40	50	140	240	4260	UB821M400Q500A □□
	820	45	40	140	240	4220	UB821M400V400A □□
	1000	35	55	120	200	4890	UB102M400P550A □□
	1000	40	55	120	200	4990	UB102M400Q550A □□
	1000	45	45	120	200	4950	UB102M400V450A □□
	1200	35	80	100	170	5670	UB122M400P800A □□
	1200	40	60	100	170	5630	UB122M400Q600A □□
	1200	40	70	100	170	5690	UB122M400Q700A □□
	1200	45	50	100	170	5590	UB122M400V500A □□
	1500	35	95	76	130	6700	UB152M400P950A □□
	1500	40	75	76	130	6400	UB152M400Q750A □□
	1500	45	55	76	130	6010	UB152M400V550A □□
	1800	40	85	65	110	7300	UB182M400Q850A □□
	1800	45	65	65	110	7150	UB182M400V650A □□
	2200	45	80	53	90	8420	UB222M400V800A □□
450	68	22	30	2290	3900	630	UB680M450M300A □□
	82	22	35	1900	3230	730	UB820M450M350A □□
	100	22	35	1560	2650	890	UB101M450M350A □□
	100	25	30	1560	2650	920	UB101M450N300A □□
	120	22	40	1300	2210	1200	UB121M450M400A □□
	120	25	35	1300	2210	1230	UB121M450N350A □□
	120	30	30	1300	2210	1150	UB121M450O300A □□
	150	22	40	1040	1770	1260	UB151M450M400A □□
	150	25	35	1040	1770	1320	UB151M450N350A □□
	150	30	30	1040	1770	1320	UB151M450O300A □□
	150	35	20	1040	1770	1260	UB151M450P200A □□
	180	25	45	860	1470	1550	UB181M450N450A □□
	180	30	35	860	1470	1550	UB181M450O350A □□
	180	35	25	860	1470	1410	UB181M450P250A □□
	220	25	45	710	1210	1690	UB221M450N450A □□
	220	30	40	710	1210	1820	UB221M450O400A □□
	220	35	30	710	1210	1730	UB221M450P300A □□

□□: See description at end of standard ratings

For further information please contact sales@capxon.org

STANDARD RATINGS

V_R (V)	C_R (µF)	ø D (mm)	L (mm)	Typ. ESR +20°C ▪ 120Hz (mΩ)	Max. ESR +20°C ▪ 120Hz (mΩ)	I_R ▪ Max. Ripple Current +85°C ▪ 120Hz (mA rms)	CapXon Part Number
450	270	30	40	580	980	1900	UB271M450O400A □□
	270	35	35	580	980	1900	UB271M450P350A □□
	330	30	40	470	800	2030	UB331M450O400A □□
	330	30	45	470	800	2090	UB331M450O450A □□
	330	35	35	470	800	2070	UB331M450P350A □□
	330	35	40	470	800	2150	UB331M450P400A □□
	390	25	55	400	680	2550	UB391M450N550A □□
	390	30	45	400	680	2590	UB391M450O450A □□
	390	35	35	400	680	2550	UB391M450P350A □□
	390	35	40	400	680	2630	UB391M450P400A □□
	390	35	45	400	680	2700	UB391M450P450A □□
	470	30	50	330	560	3250	UB471M450O500A □□
	470	35	40	330	560	3210	UB471M450P400A □□
	470	40	40	330	560	3310	UB471M450Q400A □□
	560	35	50	280	470	3630	UB561M450P500A □□
	560	35	55	280	470	3690	UB561M450P550A □□
	560	35	60	280	470	3730	UB561M450P600A □□
	560	40	45	280	470	3700	UB561M450Q450A □□
	680	35	50	230	390	3930	UB681M450P500A □□
	680	35	60	230	390	3990	UB681M450P600A □□
	680	40	50	230	390	3990	UB681M450Q500A □□
	680	40	60	230	390	4050	UB681M450Q600A □□
	680	45	40	230	390	3960	UB681M450V400A □□
	820	35	60	190	320	4440	UB821M450P600A □□
	820	40	55	190	320	4530	UB821M450Q550A □□
	820	40	60	190	320	4580	UB821M450Q600A □□
	820	45	45	190	320	4490	UB821M450V450A □□
	1000	35	80	160	270	5230	UB102M450P800A □□
	1000	40	65	160	270	5190	UB102M450Q650A □□
	1000	40	70	160	270	5260	UB102M450Q700A □□
	1000	45	50	160	270	5150	UB102M450V500A □□
	1500	40	90	110	180	6830	UB152M450Q900A □□
	1500	45	70	110	180	6780	UB152M450V700A □□
	1800	45	80	88	150	7390	UB182M450V800A □□
	2200	45	95	71	120	8610	UB222M450V950A □□
500	100	30	25	1560	2650	930	UB101M500O250A □□
	120	30	30	1300	2210	1050	UB121M500O300A □□
	120	35	25	1300	2210	1070	UB121M500P250A □□
	150	30	35	1040	1770	1230	UB151M500O350A □□
	180	30	40	860	1470	1460	UB181M500O400A □□
	180	35	30	860	1470	1380	UB181M500P300A □□
	220	30	45	710	1210	1660	UB221M500O450A □□
	220	35	35	710	1210	1570	UB221M500P350A □□
	270	30	50	580	980	1850	UB271M500O500A □□

□□: See description at end of standard ratings

For further information please contact sales@capxon.org

STANDARD RATINGS

V_R (V)	C_R (µF)	ø D (mm)	L (mm)	Typ. ESR +20°C ▪ 120Hz (mΩ)	Max. ESR +20°C ▪ 120Hz (mΩ)	I_R ▪ Max. Ripple Current +85°C ▪ 120Hz (mA rms)	CapXon Part Number
500	270	35	40	580	980	1770	UB271M500P400A [ ][ ][ ]
	330	35	40	470	800	1790	UB331M500P400A [ ][ ][ ]
	330	35	45	470	800	1880	UB331M500P450A [ ][ ][ ]
	330	40	40	470	800	1880	UB331M500Q400A [ ][ ][ ]
	390	35	45	400	680	2120	UB391M500P450A [ ][ ][ ]
	390	35	50	400	680	2360	UB391M500P500A [ ][ ][ ]
	390	40	45	400	680	2410	UB391M500Q450A [ ][ ][ ]
	470	35	50	330	560	2420	UB471M500P500A [ ][ ][ ]
	470	35	55	330	560	2560	UB471M500P550A [ ][ ][ ]
	470	40	50	330	560	2600	UB471M500Q500A [ ][ ][ ]
	470	45	40	330	560	2580	UB471M500V400A [ ][ ][ ]
	560	35	55	280	470	2560	UB561M500P550A [ ][ ][ ]
	560	35	70	280	470	2820	UB561M500P700A [ ][ ][ ]
	560	40	55	280	470	2730	UB561M500Q550A [ ][ ][ ]
	560	45	45	280	470	2700	UB561M500V450A [ ][ ][ ]
	680	35	65	230	390	2700	UB681M500P650A [ ][ ][ ]
	680	35	70	230	390	2820	UB681M500P700A [ ][ ][ ]
	680	40	65	230	390	2890	UB681M500Q650A [ ][ ][ ]
	680	45	50	230	390	2820	UB681M500V500A [ ][ ][ ]
	820	35	95	190	320	3300	UB821M500P950A [ ][ ][ ]
	820	40	65	190	320	3000	UB821M500Q650A [ ][ ][ ]
	820	45	60	190	320	3200	UB821M500V600A [ ][ ][ ]
	1000	40	85	160	270	3700	UB102M500Q850A [ ][ ][ ]
	1000	45	70	160	270	3650	UB102M500V700A [ ][ ][ ]
	1200	45	80	130	220	4150	UB122M500V800A [ ][ ][ ]
	1500	45	100	110	180	4950	UB152M500VA00A [ ][ ]

[ ][ ][ ]: Enter **P6** for standard type ▪ 6mm pin length
[ ][ ][ ][ ]: Enter **Z6** for 3-pin type ▪ 6mm pin length
[ ][ ]: Enter **Y6** for multipin-type ▪ 6mm pin length
[ ][ ][ ]: Enter **P4** for standard type ▪ 4mm pin length
[ ][ ][ ][ ]: Enter **Z4** for 3-pin type ▪ 4mm pin length
[ ][ ]: Enter **Y4** for multipin type ▪ 4mm pin length

DIMENSIONS ▪ All dimensions in mm

2-pin version ▪ Standard type

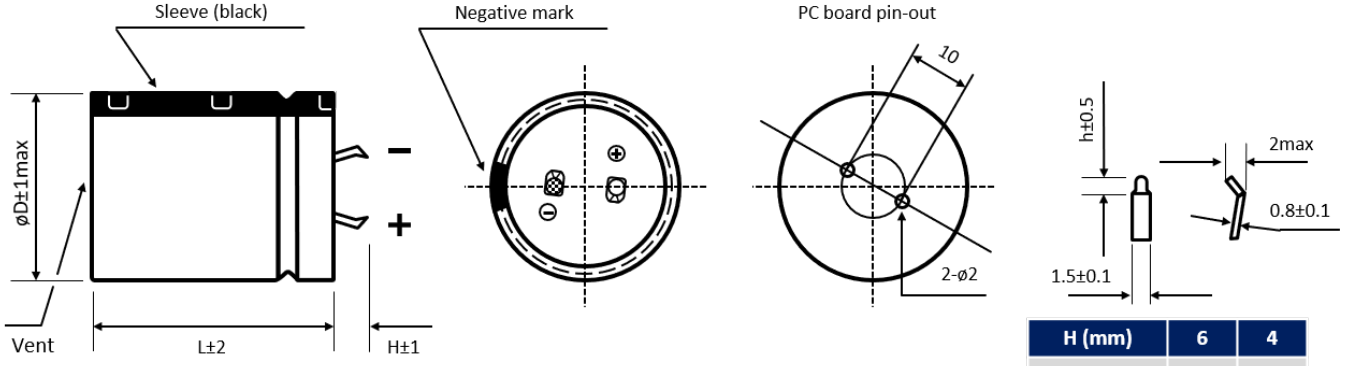

H (mm)	6	4
h (mm)	2.5	1.5

Standard: H = 6 ± 1mm. Also available H = 4 ± 1mm

For further information please contact sales@capxon.org

DIMENSIONS ▪ All dimensions in mm

3-pin version ▪ Polarity protection

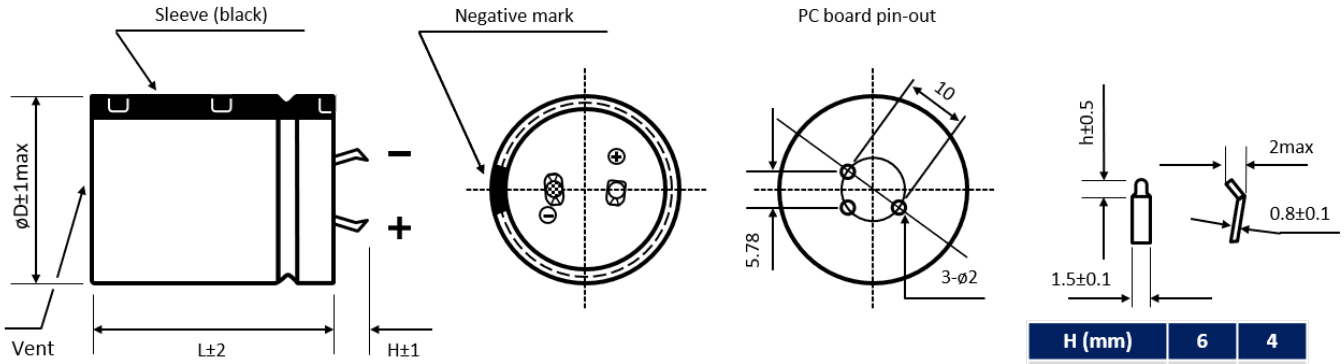

H (mm)	6	4
h (mm)	2.5	1.5

Standard: H = 4 ± 1mm. Also available H = 6 ± 1mm

Multipin version ▪ Diameter ø D ≥ 30 mm

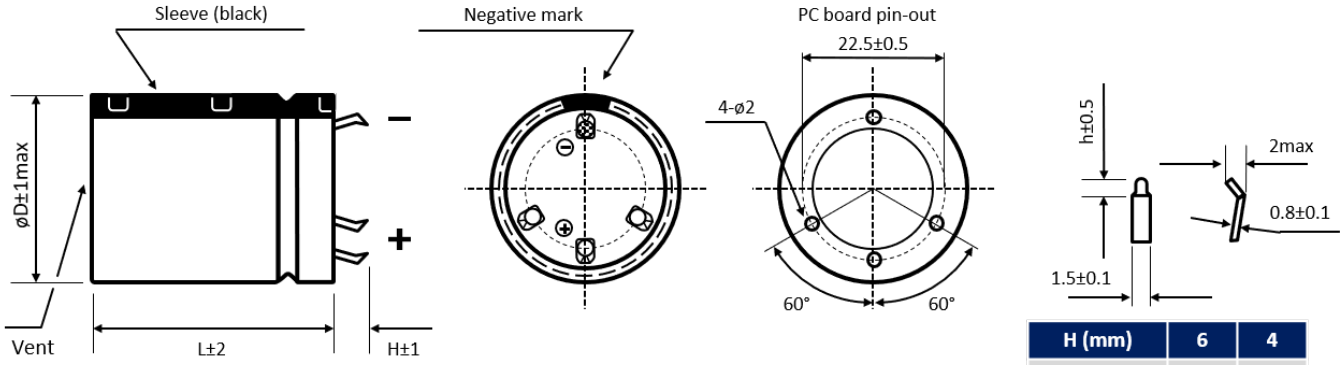

H (mm)	6	4
h (mm)	2.5	1.5

Standard: H = 6 ± 1mm. Also available H = 4 ± 1mm

Further possible terminal styles can be found in our packaging information liquid snap-in.

MULTIPLIER K_f for RIPPLE CURRENT vs. FREQUENCY

V_R (V) / Frequency (Hz)	50/60	100/120	300	1k	10k	50k - 100k
$200 \le V_R \le 250$	0.81	1	1.17	1.32	1.45	1.5
$315 \le V_R \le 500$	0.77	1	1.16	1.3	1.41	1.43

PRECAUTIONS, GUIDELINES AND PACKAGING INFORMATON

Unless otherwise agreed in individual specifications, all products are subject to our “General Precautions and Guidelines” as well as our “Packaging Information”. Please refer to the following pages in the table.

General Precautions and Guidelines	Packaging Information Liquid Snap-In
Page 837	Page 579

For further information please contact sales@capxon.org

USEFUL LIFE

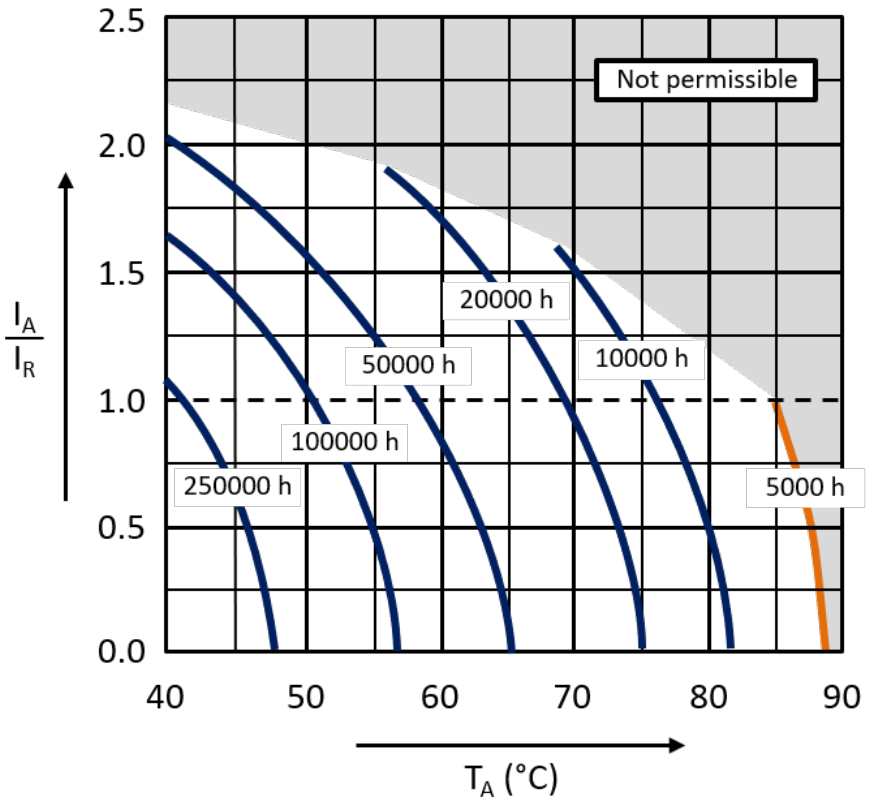

With: I_A: Application current
I_R: Rated ripple current (A RMS)
T_A: Application temperature of the capacitor

DISCLAIMER
All product related data (e.g. specification, statements and general information) are subject to change without any notice. It is necessary that the customer observes all product related technical / application information and handling instructions.

CapXon products are designed and manufactured according to severe quality and safety standards. Under no circumstance, CapXon warrants that any CapXon product is suitable for the purposes intended for your application, even CapXon knows the application. It is customer's duty and obligation to check and make sure that CapXon products are suitable for the purposes intended and select the correct and proper CapXon product. Customers are requested to perform a sufficient validation and reliability evaluation to assure needed safety level and reliability performance by suitable designs and to apply proper safeguards (e.g. redundancies, protective circuits).

Particular operating conditions (ambient temperature, ripple current, voltage, thermal resistance, etc.) as well as storage, production or assembly may affect the performance and the lifetime of the capacitor. Please consult CapXon for lifetime estimation, failure mode considerations or worst-case scenarios according to the product technology, product tolerances / deviations or change of the characteristics of the capacitor due to shipment, storage, handling, production and usage.

For aerospace or military application, life-saving, life-sustaining, safety critical applications or any application where failure may cause severe personal injury or death, please consult us before design-in the capacitor in your application.

Except for the written expressed warranties, CapXon does not impliedly, by assumption or whatever else, warrant, undertake, promise any other warranty or guaranty for any CapXon product.

For further information, please visit our website www.capxongroup.com or contact CapXon directly.

LU SERIES ▪ LONG LIFE 85°C TYPE



KEY FEATURES

HIGH VOLTAGE LONG LIFE

- **ALUMINUM ELECTROLYTIC CAPACITOR** ▪ Snap-In type
- Useful life: 85°C ▪ 4 000 hours up to 7 000 hours
- Wide capacitance range
- Small dimensions
- Stable operating under steady state environment

HF Halogen Free RoHS & REACH COMPLIANT

SPECIFICATIONS

Items		Performance Characteristics										
Operating Temperature Range		-40 ~ +85°C						-25 ~ +85°C				
Rated Voltage Range	V_R	10 ~ 350V DC						400 ~ 600V DC				
Surge Voltage	V_S	($V_R \le 315V$): $V_S = 1.15 \cdot V_R$						($V_R > 315V$): $V_S = 1.10 \cdot V_R$				
Capacitance Range	C_R	82 ~ 82000µF						47 ~ 2200µF				
Cap. Tolerance	ΔC	±20% (120Hz ▪ 20°C)										
Leakage Current (20°C ▪ V_R applied)	I_{LEAK}	≤ √3·C_R·V_R ▪ After 5 minutes [I_{LEAK} (µA) ; C_R (µF) ; V_R (V)]										
Dissipation Factor % (20°C ▪ 120Hz)	tanδ	µF / V DC	10	16	25	35	50	63	80	100	160 ~ 420	450 ~ 600
		≤ 8200	-	35	30	25	20	20	15	15	15	20
		10000 ~ 22000	40	40	35	30	30	25	20	-	-	-
		≥ 27000	50	40	35	35	30	25	-	-	-	-
Low Temperature Characteristics at 120Hz	Z ratio max.	V_R (V DC)	6.3 ~ 16	25	35	50 ~ 100		160 ~ 250	315 ~ 350	400 ~ 600		
		Z-25°C/Z+20°C	5	4	4	4		4	8	8		
		Z-40°C/Z+20°C	15	15	12	12		8	12	-		

Lifetime Test		$V_R \le 100V$	$V_R > 100V$
Useful Life 85°C (V_R & I_R applied)	Test	**4 000 hours**	**7 000 hours**
	△C/C_R	≤ ±30% of initial measured value	≤ ±20% of initial measured value
	tanδ	≤ 300% of initial specified value	≤ 200% of initial specified value
	I_{Leak}	≤ the initial specified value	≤ the initial specified value
	Deviation Rate @ Useful Life: 10 000 FIT = 1%/1000h with 60% confidence level ▪ parts show higher drift as test criteria		
Endurance 85°C (V_R & I_R applied)	Test	**3 000 hours**	
	△C/C_R	≤ ±20% of initial measured value	≤ ±15% of initial measured value
	tanδ	≤ 200% of initial specified value	≤ 175% of initial specified value
	I_{Leak}	≤ the initial specified value	≤ the initial specified value
Shelf Life 85°C (V_R = 0)	Test	**1 000 hours**	
	△C/C_R	≤ ±20% of initial measured value	≤ ±15% of initial measured value
	tanδ	≤ 200% of initial specified value	≤ 175% of initial specified value
	I_{Leak}	≤ the initial specified value	≤ the initial specified value
	Before measurement: Restore capacitor to 20°C, apply V_R for 30 min according JIS-C-5101-4		
Vibration Resistance Test	Max. 10g force, f_{RANGE} 10Hz … 55Hz, amplitude 0.75mm; X/Y/Z-axis each 2h; capacitor rigidly clamped by body to surface ▪ IEC 60068-2-6		

For further information please contact sales@capxon.org

STANDARD RATINGS

V_R (V)	C_R (µF)	ø D (mm)	L (mm)	Typ. ESR +20°C ▪ 120Hz (mΩ)	Max. ESR +20°C ▪ 120Hz (mΩ)	I_R ▪ Max. Ripple Current +85°C ▪ 120Hz (mA rms)	CapXon Part Number
10	10000	20	25	36	46	2230	LU103M010L250A □□
	12000	22	25	34	44	2900	LU123M010M250A □□
	15000	22	30	27	35	3200	LU153M010M300A □□
	15000	25	25	27	35	3210	LU153M010N250A □□
	18000	22	35	23	29	3220	LU183M010M350A □□
	18000	25	30	23	29	3650	LU183M010N300A □□
	22000	22	40	19	24	3790	LU223M010M400A □□
	22000	25	30	19	24	3750	LU223M010N300A □□
	22000	30	25	19	24	4100	LU223M010O250A □□
	27000	25	35	19	25	4040	LU273M010N350A □□
	27000	30	30	19	25	4060	LU273M010O300A □□
	33000	25	40	15	20	4600	LU333M010N400A □□
	33000	30	30	15	20	4800	LU333M010O300A □□
	39000	25	45	13	17	5290	LU393M010N450A □□
	39000	35	30	13	17	5300	LU393M010P300A □□
	47000	25	50	11	14	5800	LU473M010N500A □□
	47000	30	40	11	14	5820	LU473M010O400A □□
	47000	35	30	11	14	6000	LU473M010P300A □□
	56000	30	45	9	12	6700	LU563M010O450A □□
	56000	35	35	9	12	6800	LU563M010P350A □□
	68000	30	50	8	10	7500	LU683M010O500A □□
	68000	35	40	8	10	7550	LU683M010P400A □□
	82000	35	45	6	8	8700	LU823M010P450A □□
16	8200	20	25	44	57	2570	LU822M016L250A □□
	10000	22	25	36	46	2860	LU103M016M250A □□
	12000	22	25	34	44	2890	LU123M016M250A □□
	15000	22	30	27	35	3450	LU153M016M300A □□
	18000	25	25	23	29	3470	LU183M016N250A □□
	22000	25	30	19	24	3940	LU223M016N300A □□
	27000	30	30	15	20	4990	LU273M016O300A □□
	33000	30	35	12	16	5490	LU333M016O350A □□
	33000	35	25	12	16	5210	LU333M016P250A □□
	39000	30	40	10	14	6110	LU393M016O400A □□
	39000	35	30	10	14	6130	LU393M016P300A □□
	47000	30	45	9	11	6950	LU473M016O450A □□
	56000	30	50	7	10	7630	LU563M016O500A □□
	56000	35	40	7	10	7690	LU563M016P400A □□
	68000	35	45	6	8	8450	LU683M016P450A □□
	82000	35	50	5	7	9150	LU823M016P500A □□
25	5600	20	25	55	71	2330	LU562M025L250A □□
	5600	22	25	55	71	2400	LU562M025M250A □□
	6800	22	25	45	59	2620	LU682M025M250A □□
	6800	25	25	45	59	2680	LU682M025N250A □□
	8200	22	30	37	49	2910	LU822M025M300A □□

□□: See description at end of standard ratings

For further information please contact sales@capxon.org

STANDARD RATINGS

V_R (V)	C_R (µF)	ø D (mm)	L (mm)	Typ. ESR +20°C ▪ 120Hz (mΩ)	Max. ESR +20°C ▪ 120Hz (mΩ)	I_R ▪ Max. Ripple Current +85°C ▪ 120Hz (mA rms)	CapXon Part Number
25	8200	25	25	37	49	2950	LU822M025N250A □□
	10000	22	35	31	40	3310	LU103M025M350A □□
	10000	25	25	31	40	3180	LU103M025N250A □□
	12000	22	40	30	39	3770	LU123M025M400A □□
	12000	25	30	30	39	3650	LU123M025N300A □□
	15000	22	45	24	31	4080	LU153M025M450A □□
	15000	25	35	24	31	4100	LU153M025N350A □□
	18000	25	40	20	26	4680	LU183M025N400A □□
	18000	30	30	20	26	4710	LU183M025O300A □□
	22000	25	45	16	21	4720	LU223M025N450A □□
	22000	30	35	16	21	4750	LU223M025O350A □□
	27000	25	50	13	17	6020	LU273M025N500A □□
	27000	30	40	13	17	6100	LU273M025O400A □□
	27000	35	35	13	17	6120	LU273M025P350A □□
	33000	30	45	11	14	6750	LU333M025O450A □□
	33000	35	40	11	14	6800	LU333M025P400A □□
	39000	30	50	9	12	7400	LU393M025O500A □□
	39000	35	45	9	12	7610	LU393M025P450A □□
	47000	35	50	8	10	8300	LU473M025P500A □□
35	3300	20	25	77	100	2140	LU332M035L250A □□
	3900	20	30	65	85	2280	LU392M035L300A □□
	3900	22	25	65	85	2220	LU392M035M250A □□
	4700	20	35	54	71	2460	LU472M035L350A □□
	4700	22	25	54	71	2470	LU472M035M250A □□
	5600	22	30	46	59	2800	LU562M035M300A □□
	5600	25	25	46	59	2820	LU562M035N250A □□
	6800	22	35	38	49	2890	LU682M035M350A □□
	6800	25	30	38	49	2920	LU682M035N300A □□
	6800	30	25	38	49	3090	LU682M035O250A □□
	8200	22	40	31	40	3470	LU822M035M400A □□
	8200	25	35	31	40	3500	LU822M035N350A □□
	8200	30	25	31	40	3510	LU822M035O250A □□
	10000	22	45	26	33	3600	LU103M035M450A □□
	10000	25	40	26	33	3650	LU103M035N400A □□
	10000	30	30	26	33	3670	LU103M035O300A □□
	10000	35	25	26	33	3710	LU103M035P250A □□
	12000	25	40	26	33	4510	LU123M035N400A □□
	12000	30	35	26	33	4550	LU123M035O350A □□
	12000	35	25	26	33	4520	LU123M035P250A □□
	15000	25	45	20	27	4550	LU153M035N450A □□
	15000	30	40	20	27	4800	LU153M035O400A □□
	15000	35	30	20	27	4820	LU153M035P300A □□
	18000	25	50	17	22	4840	LU183M035N500A □□
	18000	30	40	17	22	4870	LU183M035O400A □□

□□: See description at end of standard ratings

For further information please contact sales@capxon.org

STANDARD RATINGS

V_R (V)	C_R (µF)	ø D (mm)	L (mm)	Typ. ESR +20°C ▪ 120Hz (mΩ)	Max. ESR +20°C ▪ 120Hz (mΩ)	I_R ▪ Max. Ripple Current +85°C ▪ 120Hz (mA rms)	CapXon Part Number
35	18000	35	35	17	22	5700	LU183M035P350A □□
	22000	30	45	14	18	6380	LU223M035O450A □□
	22000	35	40	14	18	6400	LU223M035P400A □□
	27000	35	45	13	17	6900	LU273M035P450A □□
	33000	35	50	11	14	7490	LU333M035P500A □□
50	2200	20	25	92	120	2070	LU222M050L250A □□
	2200	22	25	92	120	2190	LU222M050M250A □□
	2700	20	30	76	98	2210	LU272M050L300A □□
	2700	22	25	76	98	2210	LU272M050M250A □□
	3300	20	35	62	80	2410	LU332M050L350A □□
	3300	22	30	62	80	2410	LU332M050M300A □□
	3300	25	25	62	80	2410	LU332M050N250A □□
	3900	20	40	52	68	2720	LU392M050L400A □□
	3900	22	30	52	68	2610	LU392M050M300A □□
	3900	25	25	52	68	2560	LU392M050N250A □□
	4700	22	35	43	56	2930	LU472M050M350A □□
	4700	25	30	43	56	3070	LU472M050N300A □□
	4700	30	25	43	56	3010	LU472M050O250A □□
	5600	22	40	36	47	3410	LU562M050M400A □□
	5600	25	35	36	47	3470	LU562M050N350A □□
	5600	30	25	36	47	3370	LU562M050O250A □□
	6800	22	45	30	39	3940	LU682M050M450A □□
	6800	25	35	30	39	3890	LU682M050N350A □□
	6800	30	30	30	39	3860	LU682M050O300A □□
	6800	35	25	30	39	3840	LU682M050P250A □□
	8200	25	45	25	32	4440	LU822M050N450A □□
	8200	30	35	25	32	4470	LU822M050O350A □□
	8200	35	30	25	32	4470	LU822M050P300A □□
	10000	25	50	20	27	5020	LU103M050N500A □□
	10000	30	40	20	27	5080	LU103M050O400A □□
	10000	35	30	20	27	5020	LU103M050P300A □□
	12000	30	45	26	33	5600	LU123M050O450A □□
	12000	35	35	26	33	5600	LU123M050P350A □□
	15000	30	50	20	27	6440	LU153M050O500A □□
	15000	35	45	20	27	6560	LU153M050P450A □□
	18000	35	45	17	22	7180	LU183M050P450A □□
63	1500	20	25	140	180	1700	LU152M063L250A □□
	1500	22	25	140	180	1750	LU152M063M250A □□
	1800	20	30	120	150	2050	LU182M063L300A □□
	1800	22	25	120	150	2040	LU182M063M250A □□
	2200	20	35	92	120	2400	LU222M063L350A □□
	2200	22	30	92	120	2410	LU222M063M300A □□
	2200	25	25	92	120	2430	LU222M063N250A □□
	2700	20	40	76	98	2530	LU272M063L400A □□

□□: See description at end of standard ratings

For further information please contact sales@capxon.org

STANDARD RATINGS

V_R (V)	C_R (µF)	ø D (mm)	L (mm)	Typ. ESR +20°C ▪ 120Hz (mΩ)	Max. ESR +20°C ▪ 120Hz (mΩ)	I_R ▪ Max. Ripple Current +85°C ▪ 120Hz (mA rms)	CapXon Part Number
63	2700	22	35	76	98	2540	LU272M063M350A □□
	2700	25	30	76	98	2580	LU272M063N300A □□
	3300	22	35	62	80	2720	LU332M063M350A □□
	3300	25	30	62	80	2740	LU332M063N300A □□
	3300	30	25	62	80	2840	LU332M063O250A □□
	3900	22	40	52	68	2950	LU392M063M400A □□
	3900	25	35	52	68	3160	LU392M063N350A □□
	3900	30	30	52	68	3170	LU392M063O300A □□
	3900	35	25	52	68	3190	LU392M063P250A □□
	4700	22	50	43	56	3690	LU472M063M500A □□
	4700	25	40	43	56	3590	LU472M063N400A □□
	4700	30	30	43	56	3700	LU472M063O300A □□
	4700	35	25	43	56	3710	LU472M063P250A □□
	5600	25	45	36	47	3810	LU562M063N450A □□
	5600	30	35	36	47	3850	LU562M063O350A □□
	5600	35	30	36	47	3910	LU562M063P300A □□
	6800	25	50	30	39	4530	LU682M063N500A □□
	6800	30	40	30	39	4610	LU682M063O400A □□
	6800	35	30	30	39	4950	LU682M063P300A □□
	8200	30	45	25	32	5150	LU822M063O450A □□
	8200	35	35	25	32	5180	LU822M063P350A □□
	10000	30	50	20	27	5800	LU103M063O500A □□
	10000	35	40	20	27	5830	LU103M063P400A □□
	12000	35	45	21	28	6470	LU123M063P450A □□
	15000	35	50	17	22	6850	LU153M063P500A □□
80	1000	20	25	150	200	1570	LU102M080L250A □□
	1200	20	30	130	170	1800	LU122M080L300A □□
	1200	22	25	130	170	1810	LU122M080M250A □□
	1500	20	30	100	130	2100	LU152M080L300A □□
	1500	22	30	100	130	2120	LU152M080M300A □□
	1500	25	25	100	130	2160	LU152M080N250A □□
	1800	20	35	85	110	2300	LU182M080L350A □□
	1800	22	30	85	110	2310	LU182M080M300A □□
	1800	25	25	85	110	2350	LU182M080N250A □□
	2200	20	40	70	90	2530	LU222M080L400A □□
	2200	22	35	70	90	2560	LU222M080M350A □□
	2200	25	30	70	90	2580	LU222M080N300A □□
	2200	30	25	70	90	2620	LU222M080O250A □□
	2700	22	40	57	74	2930	LU272M080M400A □□
	2700	25	35	57	74	2950	LU272M080N350A □□
	2700	30	25	57	74	2990	LU272M080O250A □□
	2700	35	25	57	74	3020	LU272M080P250A □□
	3300	22	45	46	60	3250	LU332M080M450A □□
	3300	25	40	46	60	3290	LU332M080N400A □□

□□: See description at end of standard ratings

For further information please contact sales@capxon.org

STANDARD RATINGS

V_R (V)	C_R (µF)	ø D (mm)	L (mm)	Typ. ESR +20°C ▪ 120Hz (mΩ)	Max. ESR +20°C ▪ 120Hz (mΩ)	I_R ▪ Max. Ripple Current +85°C ▪ 120Hz (mA rms)	CapXon Part Number
80	3300	30	30	46	60	3310	LU332M080O300A □□
	3300	35	25	46	60	3350	LU332M080P250A □□
	3900	22	50	39	51	3620	LU392M080M500A □□
	3900	25	45	39	51	3710	LU392M080N450A □□
	3900	30	35	39	51	3780	LU392M080O350A □□
	3900	35	30	39	51	3910	LU392M080P300A □□
	4700	25	50	33	42	4280	LU472M080N500A □□
	4700	30	40	33	42	4310	LU472M080O400A □□
	4700	35	30	33	42	4450	LU472M080P300A □□
	5600	30	45	27	36	4700	LU562M080O450A □□
	5600	35	35	27	36	4750	LU562M080P350A □□
	6800	30	50	23	29	5270	LU682M080O500A □□
	6800	35	40	23	29	5350	LU682M080P400A □□
	8200	35	45	19	24	5900	LU822M080P450A □□
	10000	35	50	15	20	7050	LU103M080P500A □□
100	680	20	25	220	290	1680	LU681M100L250A □□
	680	22	25	220	290	1710	LU681M100M250A □□
	820	20	30	180	240	1910	LU821M100L300A □□
	820	22	25	180	240	1900	LU821M100M250A □□
	1000	20	30	150	200	2020	LU102M100L300A □□
	1000	22	30	150	200	2040	LU102M100M300A □□
	1000	25	25	150	200	2100	LU102M100N250A □□
	1200	20	35	130	170	2120	LU122M100L350A □□
	1200	22	30	130	170	2150	LU122M100M300A □□
	1200	25	25	130	170	2180	LU122M100N250A □□
	1500	20	40	100	130	2450	LU152M100L400A □□
	1500	22	35	100	130	2470	LU152M100M350A □□
	1500	25	30	100	130	2500	LU152M100N300A □□
	1500	30	25	100	130	2560	LU152M100O250A □□
	1800	22	40	85	110	2770	LU182M100M400A □□
	1800	25	35	85	110	2810	LU182M100N350A □□
	1800	30	25	85	110	2850	LU182M100O250A □□
	1800	35	25	85	110	2890	LU182M100P250A □□
	2200	22	45	70	90	3150	LU222M100M450A □□
	2200	25	40	70	90	3210	LU222M100N400A □□
	2200	30	30	70	90	3250	LU222M100O300A □□
	2200	35	25	70	90	3280	LU222M100P250A □□
	2700	25	45	57	74	3660	LU272M100N450A □□
	2700	30	35	57	74	3700	LU272M100O350A □□
	2700	35	30	57	74	3770	LU272M100P300A □□
	3300	25	50	46	60	4150	LU332M100N500A □□
	3300	30	40	46	60	4180	LU332M100O400A □□
	3300	35	35	46	60	4210	LU332M100P350A □□
	3900	30	45	39	51	4670	LU392M100O450A □□

□□: See description at end of standard ratings

For further information please contact sales@capxon.org

STANDARD RATINGS

V_R (V)	C_R (µF)	ø D (mm)	L (mm)	Typ. ESR +20°C ▪ 120Hz (mΩ)	Max. ESR +20°C ▪ 120Hz (mΩ)	I_R ▪ Max. Ripple Current +85°C ▪ 120Hz (mA rms)	CapXon Part Number
100	3900	35	35	39	51	4690	LU392M100P350A □□
	4700	30	50	33	42	5260	LU472M100O500A □□
	4700	35	40	33	42	5310	LU472M100P400A □□
	5600	35	45	27	36	5890	LU562M100P450A □□
	6800	35	50	23	29	6010	LU682M100P500A □□
160	220	20	25	510	900	1110	LU221M160L250A □□
	270	20	25	420	740	1120	LU271M160L250A □□
	270	22	25	420	740	1270	LU271M160M250A □□
	330	20	30	340	600	1280	LU331M160L300A □□
	330	22	25	340	600	1550	LU331M160M250A □□
	390	20	30	290	510	1630	LU391M160L300A □□
	390	22	25	290	510	1650	LU391M160M250A □□
	390	25	20	290	510	1670	LU391M160N200A □□
	470	22	30	240	420	1900	LU471M160M300A □□
	470	25	25	240	420	1920	LU471M160N250A □□
	560	22	30	210	360	2150	LU561M160M300A □□
	560	25	25	210	360	2180	LU561M160N250A □□
	560	30	20	210	360	2210	LU561M160O200A □□
	680	22	35	170	290	2350	LU681M160M350A □□
	680	25	30	170	290	2380	LU681M160N300A □□
	680	30	25	170	290	2420	LU681M160O250A □□
	680	35	20	170	290	2510	LU681M160P200A □□
	820	22	40	140	240	2680	LU821M160M400A □□
	820	25	30	140	240	2710	LU821M160N300A □□
	820	30	25	140	240	2760	LU821M160O250A □□
	820	35	20	140	240	2790	LU821M160P200A □□
	1000	22	45	110	200	3020	LU102M160M450A □□
	1000	25	35	110	200	3030	LU102M160N350A □□
	1000	30	30	110	200	3050	LU102M160O300A □□
	1000	35	25	110	200	3130	LU102M160P250A □□
	1200	22	45	97	170	3250	LU122M160M450A □□
	1200	25	40	97	170	3430	LU122M160N400A □□
	1200	30	30	97	170	3450	LU122M160O300A □□
	1200	35	25	97	170	3480	LU122M160P250A □□
	1500	25	50	74	130	3960	LU152M160N500A □□
	1500	30	35	74	130	4010	LU152M160O350A □□
	1500	35	30	74	130	4030	LU152M160P300A □□
	1800	25	50	63	110	4200	LU182M160N500A □□
	1800	30	40	63	110	4310	LU182M160O400A □□
	1800	35	35	63	110	4380	LU182M160P350A □□
	2200	30	45	52	90	4850	LU222M160O450A □□
	2200	35	40	52	90	4900	LU222M160P400A □□
	2700	30	50	42	74	5450	LU272M160O500A □□
	2700	35	45	42	74	5570	LU272M160P450A □□

□□: See description at end of standard ratings

For further information please contact sales@capxon.org

STANDARD RATINGS

V_R (V)	C_R (µF)	ø D (mm)	L (mm)	Typ. ESR +20°C ▪ 120Hz (mΩ)	Max. ESR +20°C ▪ 120Hz (mΩ)	I_R ▪ Max. Ripple Current +85°C ▪ 120Hz (mA rms)	CapXon Part Number
160	3300	35	50	34	60	6210	LU332M160P500A □□
	3300	40	50	34	60	6340	LU332M160Q500A □□
	3900	35	80	29	51	7840	LU392M160P800A □□
	3900	40	60	29	51	7450	LU392M160Q600A □□
	4700	40	80	24	42	8790	LU472M160Q800A □□
180	220	22	20	510	900	1180	LU221M180M200A □□
	270	20	25	420	740	1290	LU271M180L250A □□
	330	20	30	340	600	1770	LU331M180L300A □□
	330	22	25	340	600	1790	LU331M180M250A □□
	330	25	20	340	600	1810	LU331M180N200A □□
	390	20	30	290	510	1840	LU391M180L300A □□
	470	20	30	240	420	2080	LU471M180L300A □□
	470	22	25	240	420	2080	LU471M180M250A □□
	470	30	20	240	420	1880	LU471M180O200A □□
	560	20	35	210	360	2250	LU561M180L350A □□
	560	22	30	210	360	2260	LU561M180M300A □□
	560	25	25	210	360	2270	LU561M180N250A □□
	680	20	40	170	290	2500	LU681M180L400A □□
	680	22	35	170	290	2510	LU681M180M350A □□
	680	25	30	170	290	2530	LU681M180N300A □□
	680	30	25	170	290	2550	LU681M180O250A □□
	680	35	20	170	290	2570	LU681M180P200A □□
	820	20	45	140	240	2750	LU821M180L450A □□
	820	22	40	140	240	2860	LU821M180M400A □□
	820	25	35	140	240	2870	LU821M180N350A □□
	820	30	25	140	240	2890	LU821M180O250A □□
	1000	22	50	110	200	3100	LU102M180M500A □□
	1000	25	40	110	200	3060	LU102M180N400A □□
	1000	30	30	110	200	3110	LU102M180O300A □□
	1200	22	50	97	170	3310	LU122M180M500A □□
	1200	25	45	97	170	3650	LU122M180N450A □□
	1200	30	35	97	170	3670	LU122M180O350A □□
	1200	35	30	97	170	3710	LU122M180P300A □□
	1500	25	50	74	130	3830	LU152M180N500A □□
	1500	30	40	74	130	4100	LU152M180O400A □□
	1500	35	35	74	130	4210	LU152M180P350A □□
	1800	30	45	63	110	4550	LU182M180O450A □□
	1800	35	35	63	110	4580	LU182M180P350A □□
	2200	30	50	52	90	4920	LU222M180O500A □□
	2200	35	40	52	90	4960	LU222M180P400A □□
	2700	35	50	42	74	5300	LU272M180P500A □□
200	120	22	20	950	1660	1050	LU121M200M200A □□
	220	22	25	510	900	1250	LU221M200M250A □□
	220	22	20	510	900	1190	LU221M200M200A □□

□□: See description at end of standard ratings

For further information please contact sales@capxon.org

STANDARD RATINGS

V_R (V)	C_R (µF)	ø D (mm)	L (mm)	Typ. ESR +20°C ▪ 120Hz (mΩ)	Max. ESR +20°C ▪ 120Hz (mΩ)	I_R ▪ Max. Ripple Current +85°C ▪ 120Hz (mA rms)	CapXon Part Number
200	270	22	25	420	740	1390	LU271M200M250A □□
	270	25	20	420	740	1400	LU271M200N200A □□
	330	22	25	340	600	1520	LU331M200M250A □□
	330	25	20	340	600	1560	LU331M200N200A □□
	390	22	30	290	510	1730	LU391M200M300A □□
	390	25	25	290	510	1740	LU391M200N250A □□
	470	22	30	240	420	1970	LU471M200M300A □□
	470	25	25	240	420	1990	LU471M200N250A □□
	560	22	35	210	360	2450	LU561M200M350A □□
	560	25	30	210	360	2480	LU561M200N300A □□
	560	30	25	210	360	2510	LU561M200O250A □□
	680	22	40	170	290	2700	LU681M200M400A □□
	680	25	30	170	290	2680	LU681M200N300A □□
	680	30	25	170	290	2720	LU681M200O250A □□
	820	22	45	140	240	2940	LU821M200M450A □□
	820	25	35	140	240	2930	LU821M200N350A □□
	820	30	30	140	240	2960	LU821M200O300A □□
	1000	22	50	110	200	3280	LU102M200M500A □□
	1000	25	40	110	200	3280	LU102M200N400A □□
	1000	30	35	110	200	3290	LU102M200O350A □□
	1000	35	30	110	200	3300	LU102M200P300A □□
	1200	30	35	97	170	3610	LU122M200O350A □□
	1200	35	30	97	170	3630	LU122M200P300A □□
	1500	30	45	74	130	4130	LU152M200O450A □□
	1500	35	35	74	130	4140	LU152M200P350A □□
	1800	30	50	63	110	4600	LU182M200O500A □□
	1800	35	40	63	110	4610	LU182M200P400A □□
	2200	35	45	52	90	4980	LU222M200P450A □□
	2700	35	50	42	74	5460	LU272M200P500A □□
	3300	35	60	34	60	6300	LU332M200P600A □□
	3900	40	60	29	51	7400	LU392M200Q600A □□
	4700	40	70	24	42	6780	LU472M200Q700A □□
	5600	35	100	20	36	7370	LU562M200PA00A □□
	6800	40	100	17	29	8660	LU682M200QA00A □□
220	180	22	20	630	1110	1070	LU181M220M200A □□
	270	25	20	420	740	1350	LU271M220N200A □□
	330	22	30	340	600	1700	LU331M220M300A □□
	330	25	25	340	600	1710	LU331M220N250A □□
	390	22	30	290	510	1890	LU391M220M300A □□
	390	25	25	290	510	1910	LU391M220N250A □□
	470	22	35	240	420	2080	LU471M220M350A □□
	470	25	30	240	420	2100	LU471M220N300A □□
	470	30	25	240	420	2130	LU471M220O250A □□
	560	22	40	210	360	2330	LU561M220M400A □□

□□: See description at end of standard ratings

For further information please contact sales@capxon.org

STANDARD RATINGS

V_R (V)	C_R (µF)	ø D (mm)	L (mm)	Typ. ESR +20°C ▪ 120Hz (mΩ)	Max. ESR +20°C ▪ 120Hz (mΩ)	I_R ▪ Max. Ripple Current +85°C ▪ 120Hz (mA rms)	CapXon Part Number
220	560	25	35	210	360	2390	LU561M220N350A □□
	560	30	25	210	360	2350	LU561M220O250A □□
	680	22	45	170	290	2680	LU681M220M450A □□
	680	25	35	170	290	2680	LU681M220N350A □□
	680	30	30	170	290	2690	LU681M220O300A □□
	820	25	45	140	240	3010	LU821M220N450A □□
	820	30	35	140	240	3020	LU821M220O350A □□
	820	35	30	140	240	3030	LU821M220P300A □□
	1000	25	50	110	200	3430	LU102M220N500A □□
	1000	30	35	110	200	3420	LU102M220O350A □□
	1200	30	40	97	170	3880	LU122M220O400A □□
	1200	35	35	97	170	3890	LU122M220P350A □□
	1500	30	50	74	130	4440	LU152M220O500A □□
	1500	35	40	74	130	4450	LU152M220P400A □□
	1800	35	45	63	110	4530	LU182M220P450A □□
	2200	35	50	52	90	4980	LU222M220P500A □□
250	100	22	25	1140	1990	690	LU101M250M250A □□
	150	22	20	760	1330	980	LU151M250M200A □□
	180	22	20	630	1110	1070	LU181M250M200A □□
	220	22	25	510	900	1260	LU221M250M250A □□
	220	25	20	510	900	1270	LU221M250N200A □□
	270	22	25	420	740	1510	LU271M250M250A □□
	330	22	30	340	600	1750	LU331M250M300A □□
	330	25	25	340	600	1760	LU331M250N250A □□
	390	22	35	290	510	1910	LU391M250M350A □□
	390	25	30	290	510	1920	LU391M250N300A □□
	390	30	25	290	510	1930	LU391M250O250A □□
	470	22	35	240	420	2150	LU471M250M350A □□
	470	25	35	240	420	2160	LU471M250N350A □□
	470	30	25	240	420	2160	LU471M250O250A □□
	560	22	40	210	360	2480	LU561M250M400A □□
	560	25	35	210	360	2490	LU561M250N350A □□
	560	30	25	210	360	2490	LU561M250O250A □□
	680	22	50	170	290	2710	LU681M250M500A □□
	680	25	40	170	290	2710	LU681M250N400A □□
	680	30	30	170	290	2710	LU681M250O300A □□
	820	25	45	140	240	3010	LU821M250N450A □□
	820	30	35	140	240	3020	LU821M250O350A □□
	820	35	30	140	240	3030	LU821M250P300A □□
	1000	30	40	110	200	3560	LU102M250O400A □□
	1000	35	35	110	200	3570	LU102M250P350A □□
	1200	30	45	97	170	3990	LU122M250O450A □□
	1200	35	35	97	170	4010	LU122M250P350A □□
	1500	35	40	74	130	4340	LU152M250P400A □□

□□: See description at end of standard ratings

For further information please contact sales@capxon.org

STANDARD RATINGS

V_R (V)	C_R (µF)	ø D (mm)	L (mm)	Typ. ESR +20°C ▪ 120Hz (mΩ)	Max. ESR +20°C ▪ 120Hz (mΩ)	I_R ▪ Max. Ripple Current +85°C ▪ 120Hz (mA rms)	CapXon Part Number
250	1800	35	50	63	110	4560	LU182M250P500A □□
	2200	35	50	52	90	5100	LU222M250P500A □□
	2700	40	80	42	74	6310	LU272M250Q800A □□
	3300	40	80	34	60	7010	LU332M250Q800A □□
	3900	35	100	29	51	7480	LU392M250PA00A □□
	4700	40	100	24	42	8890	LU472M250QA00A □□
315	100	22	20	1140	1990	800	LU101M315M200A □□
	120	25	20	950	1660	910	LU121M315N200A □□
	150	22	25	760	1330	1070	LU151M315M250A □□
	150	25	20	760	1330	1080	LU151M315N200A □□
	180	22	30	630	1110	1380	LU181M315M300A □□
	180	25	25	630	1110	1390	LU181M315N250A □□
	220	22	30	510	900	1470	LU221M315M300A □□
	220	25	25	510	900	1470	LU221M315N250A □□
	220	30	20	510	900	1480	LU221M315O200A □□
	270	22	35	420	740	1700	LU271M315M350A □□
	270	25	30	420	740	1710	LU271M315N300A □□
	270	30	25	420	740	1720	LU271M315O250A □□
	270	35	20	420	740	1730	LU271M315P200A □□
	330	22	40	340	600	1990	LU331M315M400A □□
	330	25	35	340	600	2000	LU331M315N350A □□
	330	30	25	340	600	1990	LU331M315O250A □□
	390	22	45	290	510	2150	LU391M315M450A □□
	390	25	40	290	510	2160	LU391M315N400A □□
	390	30	30	290	510	2160	LU391M315O300A □□
	390	35	25	290	510	2170	LU391M315P250A □□
	470	25	45	240	420	2460	LU471M315N450A □□
	470	30	35	240	420	2470	LU471M315O350A □□
	470	35	30	240	420	2480	LU471M315P300A □□
	560	25	50	210	360	2710	LU561M315N500A □□
	560	30	35	210	360	2700	LU561M315O350A □□
	560	35	30	210	360	2720	LU561M315P300A □□
	680	30	45	170	290	3060	LU681M315O450A □□
	680	35	35	170	290	3060	LU681M315P350A □□
	820	30	50	140	240	3450	LU821M315O500A □□
	820	35	40	140	240	3460	LU821M315P400A □□
	1000	35	45	110	200	3600	LU102M315P450A □□
350	82	22	20	1390	2430	730	LU820M350M200A □□
	100	22	25	1140	1990	810	LU101M350M250A □□
	120	22	25	950	1660	1050	LU121M350M250A □□
	120	25	20	950	1660	1070	LU121M350N200A □□
	150	22	30	760	1330	1240	LU151M350M300A □□
	150	25	25	760	1330	1250	LU151M350N250A □□
	180	22	30	630	1110	1370	LU181M350M300A □□

□□: See description at end of standard ratings

For further information please contact sales@capxon.org

STANDARD RATINGS

V_R (V)	C_R (µF)	ø D (mm)	L (mm)	Typ. ESR +20°C ▪ 120Hz (mΩ)	Max. ESR +20°C ▪ 120Hz (mΩ)	I_R ▪ Max. Ripple Current +85°C ▪ 120Hz (mA rms)	CapXon Part Number
350	180	25	25	630	1110	1380	LU181M350N250A □□
	180	30	20	630	1110	1390	LU181M350O200A □□
	220	22	35	510	900	1540	LU221M350M350A □□
	220	25	30	510	900	1550	LU221M350N300A □□
	220	30	25	510	900	1560	LU221M350O250A □□
	220	35	20	510	900	1570	LU221M350P200A □□
	270	22	40	420	740	1800	LU271M350M400A □□
	270	25	35	420	740	1810	LU271M350N350A □□
	270	30	25	420	740	1810	LU271M350O250A □□
	330	22	45	340	600	2030	LU331M350M450A □□
	330	25	35	340	600	2030	LU331M350N350A □□
	330	30	30	340	600	2040	LU331M350O300A □□
	330	35	25	340	600	2050	LU331M350P250A □□
	390	25	40	290	510	2240	LU391M350N400A □□
	390	30	35	290	510	2250	LU391M350O350A □□
	390	35	30	290	510	2260	LU391M350P300A □□
	470	25	50	240	420	2570	LU471M350N500A □□
	470	30	35	240	420	2560	LU471M350O350A □□
	470	35	30	240	420	2560	LU471M350P300A □□
	560	30	40	210	360	2760	LU561M350O400A □□
	560	35	35	210	360	2770	LU561M350P350A □□
	680	30	50	170	290	3210	LU681M350O500A □□
	680	35	40	170	290	3220	LU681M350P400A □□
	820	35	45	140	240	3520	LU821M350P450A □□
	1000	35	50	110	200	3660	LU102M350P500A □□
	1200	40	65	97	170	5710	LU122M350Q650A □□
	1500	45	60	74	130	6480	LU152M350V600A □□
	1800	45	70	63	110	7400	LU182M350V700A □□
	2200	45	80	52	90	8080	LU222M350V800A □□
	2700	45	100	42	74	9490	LU272M350VA00A □□
400	68	20	25	1670	2930	650	LU680M400L250A □□
	68	22	20	1670	2930	650	LU680M400M200A □□
	82	22	25	1390	2430	850	LU820M400M250A □□
	82	25	20	1390	2430	860	LU820M400N200A □□
	100	22	25	1140	1990	990	LU101M400M250A □□
	100	25	20	1140	1990	1000	LU101M400N200A □□
	120	22	25	950	1660	1100	LU121M400M250A □□
	120	25	25	950	1660	1140	LU121M400N250A □□
	150	22	30	760	1330	1250	LU151M400M300A □□
	150	22	35	760	1330	1380	LU151M400M350A □□
	150	25	25	760	1330	1300	LU151M400N250A □□
	150	25	30	760	1330	1400	LU151M400N300A □□
	150	30	25	760	1330	1420	LU151M400O250A □□
	180	22	30	630	1110	1500	LU181M400M300A □□

□□: See description at end of standard ratings

For further information please contact sales@capxon.org

STANDARD RATINGS

V_R (V)	C_R (µF)	ø D (mm)	L (mm)	Typ. ESR +20°C ▪ 120Hz (mΩ)	Max. ESR +20°C ▪ 120Hz (mΩ)	I_R ▪ Max. Ripple Current +85°C ▪ 120Hz (mA rms)	CapXon Part Number
400	180	22	35	630	1110	1550	LU181M400M350A □□
	180	25	25	630	1110	1520	LU181M400N250A □□
	180	25	30	630	1110	1580	LU181M400N300A □□
	180	30	25	630	1110	1600	LU181M400O250A □□
	180	35	20	630	1110	1630	LU181M400P200A □□
	220	22	45	510	900	1620	LU221M400M450A □□
	220	22	30	510	900	1540	LU221M400M300A □□
	220	25	30	510	900	1600	LU221M400N300A □□
	220	25	35	510	900	1640	LU221M400N350A □□
	220	25	25	510	900	1560	LU221M400N250A □□
	220	30	30	510	900	1660	LU221M400O300A □□
	220	30	25	510	900	1620	LU221M400O250A □□
	270	22	45	420	740	1700	LU271M400M450A □□
	270	22	35	420	740	1600	LU271M400M350A □□
	270	25	40	420	740	1820	LU271M400N400A □□
	270	25	30	420	740	1650	LU271M400N300A □□
	270	30	30	420	740	1820	LU271M400O300A □□
	270	30	25	420	740	1680	LU271M400O250A □□
	330	22	50	340	600	2270	LU331M400M500A □□
	330	22	40	340	600	1980	LU331M400M400A □□
	330	25	45	340	600	2290	LU331M400N450A □□
	330	25	35	340	600	2050	LU331M400N350A □□
	330	30	35	340	600	2310	LU331M400O350A □□
	330	30	25	340	600	2060	LU331M400O250A □□
	330	35	30	340	600	2400	LU331M400P300A □□
	330	35	25	340	600	2300	LU331M400P250A □□
	390	22	50	290	510	2290	LU391M400M500A □□
	390	25	45	290	510	2360	LU391M400N450A □□
	390	30	40	290	510	2460	LU391M400O400A □□
	390	30	30	290	510	2300	LU391M400O300A □□
	390	35	35	290	510	2500	LU391M400P350A □□
	390	35	25	290	510	2380	LU391M400P250A □□
	470	25	50	240	420	2450	LU471M400N500A □□
	470	30	45	240	420	2660	LU471M400O450A □□
	470	30	35	240	420	2420	LU471M400O350A □□
	470	35	35	240	420	2710	LU471M400P350A □□
	470	35	25	240	420	2400	LU471M400P250A □□
	470	35	30	240	420	2600	LU471M400P300A □□
	560	25	55	210	360	3080	LU561M400N550A □□
	560	30	50	210	360	3190	LU561M400O500A □□
	560	35	40	210	360	3440	LU561M400P400A □□
	560	35	30	210	360	3030	LU561M400P300A □□
	680	25	60	170	290	3280	LU681M400N600A □□
	680	30	55	170	290	3280	LU681M400O550A □□

□□: See description at end of standard ratings

For further information please contact sales@capxon.org

STANDARD RATINGS

V_R (V)	C_R (µF)	ø D (mm)	L (mm)	Typ. ESR +20°C ▪ 120Hz (mΩ)	Max. ESR +20°C ▪ 120Hz (mΩ)	I_R ▪ Max. Ripple Current +85°C ▪ 120Hz (mA rms)	CapXon Part Number
400	680	30	45	170	290	3250	LU681M400O450A □□
	680	35	50	170	290	3450	LU681M400P500A □□
	820	30	60	140	240	3420	LU821M400O600A □□
	820	35	50	140	240	3500	LU821M400P500A □□
	820	35	45	140	240	3420	LU821M400P450A □□
	1000	35	55	110	200	3850	LU102M400P550A □□
	1000	35	50	110	200	3600	LU102M400P500A □□
	1000	40	65	110	200	5150	LU102M400Q650A □□
	1200	35	65	97	170	4680	LU122M400P650A □□
	1200	40	60	97	170	4710	LU122M400Q600A □□
	1500	35	80	74	130	5550	LU152M400P800A □□
	1500	40	70	74	130	4610	LU152M400Q700A □□
	1800	40	80	63	110	6600	LU182M400Q800A □□
	2200	45	95	52	90	8700	LU222M400V950A □□
420	47	22	20	3220	5640	540	LU470M420M200A □□
	56	22	20	2710	4740	600	LU560M420M200A □□
	68	25	20	2230	3900	680	LU680M420N200A □□
	82	20	25	1850	3230	830	LU820M420L250A □□
	82	22	25	1850	3230	850	LU820M420M250A □□
	82	25	20	1850	3230	850	LU820M420N200A □□
	100	22	30	1510	2650	980	LU101M420M300A □□
	100	22	25	1510	2650	970	LU101M420M250A □□
	100	25	25	1510	2650	980	LU101M420N250A □□
	120	20	30	1260	2210	1050	LU121M420L300A □□
	120	22	30	1260	2210	1070	LU121M420M300A □□
	120	22	25	1260	2210	1020	LU121M420M250A □□
	120	25	25	1260	2210	1080	LU121M420N250A □□
	120	30	20	1260	2210	1100	LU121M420O200A □□
	150	22	35	1010	1770	1210	LU151M420M350A □□
	150	22	25	1010	1770	1110	LU151M420M250A □□
	150	25	30	1010	1770	1260	LU151M420N300A □□
	150	35	20	1010	1770	1320	LU151M420P200A □□
	180	22	40	840	1470	1330	LU181M420M400A □□
	180	22	30	840	1470	1320	LU181M420M300A □□
	180	25	35	840	1470	1460	LU181M420N350A □□
	180	25	25	840	1470	1330	LU181M420N250A □□
	180	30	25	840	1470	1480	LU181M420O250A □□
	180	35	20	840	1470	1480	LU181M420P200A □□
	220	22	45	690	1210	1600	LU221M420M450A □□
	220	22	35	690	1210	1420	LU221M420M350A □□
	220	25	35	690	1210	1580	LU221M420N350A □□
	220	25	30	690	1210	1470	LU221M420N300A □□
	220	30	30	690	1210	1650	LU221M420O300A □□
	220	30	25	690	1210	1590	LU221M420O250A □□

□□: See description at end of standard ratings

For further information please contact sales@capxon.org

STANDARD RATINGS

V_R (V)	C_R (µF)	ø D (mm)	L (mm)	Typ. ESR +20°C ▪ 120Hz (mΩ)	Max. ESR +20°C ▪ 120Hz (mΩ)	I_R ▪ Max. Ripple Current +85°C ▪ 120Hz (mA rms)	CapXon Part Number
420	220	35	25	690	1210	1600	LU221M420P250A □□
	270	22	45	560	980	1750	LU271M420M450A □□
	270	25	40	560	980	1980	LU271M420N400A □□
	270	25	30	560	980	1680	LU271M420N300A □□
	270	30	35	560	980	1920	LU271M420O350A □□
	270	30	25	560	980	1700	LU271M420O250A □□
	270	35	30	560	980	1940	LU271M420P300A □□
	330	25	50	460	800	2280	LU331M420N500A □□
	330	25	40	460	800	1950	LU331M420N400A □□
	330	30	35	460	800	2200	LU331M420O350A □□
	330	30	30	460	800	1980	LU331M420O300A □□
	330	35	35	460	800	2370	LU331M420P350A □□
	330	35	25	460	800	2170	LU331M420P250A □□
	390	25	50	390	680	2300	LU391M420N500A □□
	390	30	40	390	680	2320	LU391M420O400A □□
	390	30	30	390	680	2100	LU391M420O300A □□
	390	35	35	390	680	2680	LU391M420P350A □□
	390	35	25	390	680	2200	LU391M420P250A □□
	470	30	45	320	560	2720	LU471M420O450A □□
	470	30	35	320	560	2470	LU471M420O350A □□
	470	35	40	320	560	2750	LU471M420P400A □□
	470	35	30	320	560	2630	LU471M420P300A □□
	560	25	55	270	470	2820	LU561M420N550A □□
	560	30	50	270	470	2850	LU561M420O500A □□
	560	30	40	270	470	2700	LU561M420O400A □□
	560	35	45	270	470	2950	LU561M420P450A □□
	560	35	35	270	470	2700	LU561M420P350A □□
	680	30	50	220	390	2900	LU681M420O500A □□
	680	35	50	220	390	3200	LU681M420P500A □□
	680	35	40	220	390	3150	LU681M420P400A □□
	820	30	55	180	320	3400	LU821M420O550A □□
	820	35	45	180	320	3450	LU821M420P450A □□
	820	35	55	180	320	3720	LU821M420P550A □□
	820	40	45	180	320	3720	LU821M420Q450A □□
	1000	35	65	150	270	4500	LU102M420P650A □□
	1000	35	50	150	270	3780	LU102M420P500A □□
	1000	40	50	150	270	4300	LU102M420Q500A □□
	1200	35	70	130	220	4950	LU122M420P700A □□
	1200	35	60	130	220	3900	LU122M420P600A □□
	1200	40	55	130	220	4600	LU122M420Q550A □□
	1500	40	70	100	180	5980	LU152M420Q700A □□
	1800	40	80	86	150	6900	LU182M420Q800A □□

□□: See description at end of standard ratings

For further information please contact sales@capxon.org

STANDARD RATINGS

V_R (V)	C_R (µF)	ø D (mm)	L (mm)	Typ. ESR +20°C ▪ 120Hz (mΩ)	Max. ESR +20°C ▪ 120Hz (mΩ)	I_R ▪ Max. Ripple Current +85°C ▪ 120Hz (mA rms)	CapXon Part Number
450	47	22	20	3220	5640	550	LU470M450M200A □□
	56	20	25	2710	4740	610	LU560M450L250A □□
	56	22	20	2710	4740	590	LU560M450M200A □□
	68	20	25	2230	3900	620	LU680M450L250A □□
	68	22	25	2230	3900	710	LU680M450M250A □□
	68	25	20	2230	3900	720	LU680M450N200A □□
	82	20	30	1850	3230	870	LU820M450L300A □□
	82	22	25	1850	3230	860	LU820M450M250A □□
	82	25	20	1850	3230	880	LU820M450N200A □□
	100	20	35	1510	2650	910	LU101M450L350A □□
	100	22	30	1510	2650	950	LU101M450M300A □□
	100	25	25	1510	2650	970	LU101M450N250A □□
	120	22	30	1260	2210	1050	LU121M450M300A □□
	120	25	25	1260	2210	1070	LU121M450N250A □□
	150	22	35	1010	1770	1290	LU151M450M350A □□
	150	25	30	1010	1770	1310	LU151M450N300A □□
	150	30	25	1010	1770	1340	LU151M450O250A □□
	150	35	20	1010	1770	1360	LU151M450P200A □□
	180	22	35	840	1470	1380	LU181M450M350A □□
	180	25	30	840	1470	1400	LU181M450N300A □□
	180	30	25	840	1470	1440	LU181M450O250A □□
	180	30	30	840	1470	1450	LU181M450O300A □□
	180	35	25	840	1470	1470	LU181M450P250A □□
	220	22	40	690	1210	1870	LU221M450M400A □□
	220	25	35	690	1210	1890	LU221M450N350A □□
	220	30	30	690	1210	1910	LU221M450O300A □□
	220	35	25	690	1210	1920	LU221M450P250A □□
	270	25	35	560	980	2120	LU271M450N350A □□
	270	30	30	560	980	2150	LU271M450O300A □□
	270	35	25	560	980	2190	LU271M450P250A □□
	330	25	40	460	800	2410	LU331M450N400A □□
	330	30	35	460	800	2480	LU331M450O350A □□
	330	35	30	460	800	2530	LU331M450P300A □□
	330	35	35	460	800	2630	LU331M450P350A □□
	390	25	45	390	680	2670	LU391M450N450A □□
	390	30	35	390	680	2700	LU391M450O350A □□
	390	35	30	390	680	2750	LU391M450P300A □□
	470	25	50	320	560	2780	LU471M450N500A □□
	470	30	40	320	560	2820	LU471M450O400A □□
	470	30	45	320	560	2880	LU471M450O450A □□
	470	35	35	320	560	2930	LU471M450P350A □□
	560	30	45	270	470	3130	LU561M450O450A □□
	560	30	50	270	470	3170	LU561M450O500A □□
	560	35	40	270	470	3210	LU561M450P400A □□

□□: See description at end of standard ratings

For further information please contact sales@capxon.org

STANDARD RATINGS

V_R (V)	C_R (µF)	ø D (mm)	L (mm)	Typ. ESR +20°C ▪ 120Hz (mΩ)	Max. ESR +20°C ▪ 120Hz (mΩ)	I_R ▪ Max. Ripple Current +85°C ▪ 120Hz (mA rms)	CapXon Part Number
450	560	40	50	270	470	3460	LU561M450Q500A □□
	560	45	40	270	470	3480	LU561M450V400A □□
	680	30	50	220	390	3460	LU681M450O500A □□
	680	35	40	220	390	3510	LU681M450P400A □□
	680	35	45	220	390	3650	LU681M450P450A □□
	680	40	60	220	390	3980	LU681M450Q600A □□
	680	45	45	220	390	4010	LU681M450V450A □□
	820	30	60	180	320	3970	LU821M450O600A □□
	820	35	45	180	320	3900	LU821M450P450A □□
	820	35	50	180	320	4010	LU821M450P500A □□
	820	45	55	180	320	4470	LU821M450V550A □□
	1000	35	55	150	270	4010	LU102M450P550A □□
	1000	35	60	150	270	4110	LU102M450P600A □□
	1000	40	55	150	270	4600	LU102M450Q550A □□
	1000	45	60	150	270	5080	LU102M450V600A □□
	1200	40	65	130	220	5420	LU122M450Q650A □□
	1200	45	60	130	220	5790	LU122M450V600A □□
	1500	45	85	100	180	6840	LU152M450V850A □□
	1800	45	100	86	150	7860	LU182M450VA00A □□
	2200	45	90	69	120	8480	LU222M450V900A □□
500	47	22	20	3220	5640	560	LU470M500M200A □□
	56	20	25	2710	4740	620	LU560M500L250A □□
	56	22	25	2710	4740	630	LU560M500M250A □□
	56	25	20	2710	4740	640	LU560M500N200A □□
	68	20	30	2230	3900	650	LU680M500L300A □□
	68	22	25	2230	3900	630	LU680M500M250A □□
	68	22	30	2230	3900	750	LU680M500M300A □□
	68	25	20	2230	3900	680	LU680M500N200A □□
	68	25	25	2230	3900	780	LU680M500N250A □□
	82	20	30	1850	3230	850	LU820M500L300A □□
	82	22	30	1850	3230	920	LU820M500M300A □□
	82	25	25	1850	3230	950	LU820M500N250A □□
	100	22	35	1510	2650	1020	LU101M500M350A □□
	100	25	30	1510	2650	1060	LU101M500N300A □□
	100	30	20	1510	2650	1040	LU101M500O200A □□
	100	30	25	1510	2650	1070	LU101M500O250A □□
	120	22	40	1260	2210	1120	LU121M500M400A □□
	120	25	30	1260	2210	1080	LU121M500N300A □□
	120	25	35	1260	2210	1230	LU121M500N350A □□
	120	30	30	1260	2210	1250	LU121M500O300A □□
	120	35	25	1260	2210	1280	LU121M500P250A □□
	150	22	45	1010	1770	1260	LU151M500M450A □□
	150	25	35	1010	1770	1250	LU151M500N350A □□
	150	25	40	1010	1770	1280	LU151M500N400A □□
	150	30	30	1010	1770	1340	LU151M500O300A □□

□□: See description at end of standard ratings

For further information please contact sales@capxon.org

STANDARD RATINGS

V_R (V)	C_R (µF)	ø D (mm)	L (mm)	Typ. ESR +20°C ▪ 120Hz (mΩ)	Max. ESR +20°C ▪ 120Hz (mΩ)	I_R ▪ Max. Ripple Current +85°C ▪ 120Hz (mA rms)	CapXon Part Number
500	150	30	35	1010	1770	1380	LU151M500O350A ☐☐
	150	35	25	1010	1770	1360	LU151M500P250A ☐☐
	180	22	50	840	1470	1390	LU181M500M500A ☐☐
	180	25	40	840	1470	1300	LU181M500N400A ☐☐
	180	25	45	840	1470	1450	LU181M500N450A ☐☐
	180	30	30	840	1470	1280	LU181M500O300A ☐☐
	180	30	35	840	1470	1470	LU181M500O350A ☐☐
	180	35	20	840	1470	1210	LU181M500P200A ☐☐
	180	35	25	840	1470	1460	LU181M500P250A ☐☐
	220	25	50	690	1210	1520	LU221M500N500A ☐☐
	220	30	35	690	1210	1510	LU221M500O350A ☐☐
	220	30	40	690	1210	1600	LU221M500O400A ☐☐
	220	35	30	690	1210	1620	LU221M500P300A ☐☐
	270	30	40	560	980	1770	LU271M500O400A ☐☐
	270	30	45	560	980	1980	LU271M500O450A ☐☐
	270	35	35	560	980	2020	LU271M500P350A ☐☐
	330	30	50	460	800	2250	LU331M500O500A ☐☐
	330	35	35	460	800	2030	LU331M500P350A ☐☐
	330	35	40	460	800	2270	LU331M500P400A ☐☐
	390	35	45	390	680	2450	LU391M500P450A ☐☐
	470	35	50	320	560	2760	LU471M500P500A ☐☐
	560	35	60	270	470	2900	LU561M500P600A ☐☐
	560	40	50	270	470	3310	LU561M500Q500A ☐☐
	680	35	70	220	390	3820	LU681M500P700A ☐☐
	680	40	55	220	390	3790	LU681M500Q550A ☐☐
	820	35	80	180	320	4560	LU821M500P800A ☐☐
	820	40	60	180	320	4330	LU821M500Q600A ☐☐
	1000	35	90	150	270	5310	LU102M500P900A ☐☐
	1000	40	80	150	270	5420	LU102M500Q800A ☐☐
	1500	40	100	100	180	6560	LU152M500QA00A ☐☐

☐☐: See description at end of standard ratings

For further information please contact sales@capxon.org

STANDARD RATINGS

V_R (V)	C_R (µF)	ø D (mm)	L (mm)	Typ. ESR +20°C ▪ 120Hz (mΩ)	Max. ESR +20°C ▪ 120Hz (mΩ)	I_R ▪ Max. Ripple Current +85°C ▪ 120Hz (mA rms)	CapXon Part Number
600	150	30	45	1010	1770	950	LU151M600O450A ☐☐☐
	180	30	50	840	1470	1100	LU181M600O500A ☐☐☐
	220	30	60	690	1210	1220	LU221M600O600A ☐☐☐
	270	30	70	560	980	1250	LU271M600O700A ☐☐☐
	330	30	80	460	800	1360	LU331M600O800A ☐☐☐
	330	40	50	460	800	1350	LU331M600Q500A ☐☐☐
	390	40	60	390	680	1480	LU391M600Q600A ☐☐☐
	470	40	70	320	560	1670	LU471M600Q700A ☐☐☐
	470	45	55	320	560	1650	LU471M600V550A ☐☐☐
	560	40	80	270	470	1780	LU561M600Q800A ☐☐☐
	560	45	60	270	470	1750	LU561M600V600A ☐☐☐
	680	40	90	220	390	1850	LU681M600Q900A ☐☐☐
	680	45	70	220	390	1830	LU681M600V700A ☐☐☐
	820	45	85	180	320	2010	LU821M600V850A ☐☐☐
	1000	45	100	150	270	2280	LU102M600VA00A ☐☐

☐☐☐: Enter **P6** for standard type ▪ 6mm pin length
☐☐☐☐: Enter **Z6** for 3-pin type ▪ 6mm pin length
☐☐☐: Enter **Y6** for multipin-type ▪ 6mm pin length
☐☐☐: Enter **P4** for standard type ▪ 4mm pin length
☐☐☐☐: Enter **Z4** for 3-pin type ▪ 4mm pin length
☐☐☐: Enter **Y4** for multipin type ▪ 4mm pin length

DIMENSIONS ▪ All dimensions in mm

2-pin version ▪ Standard type

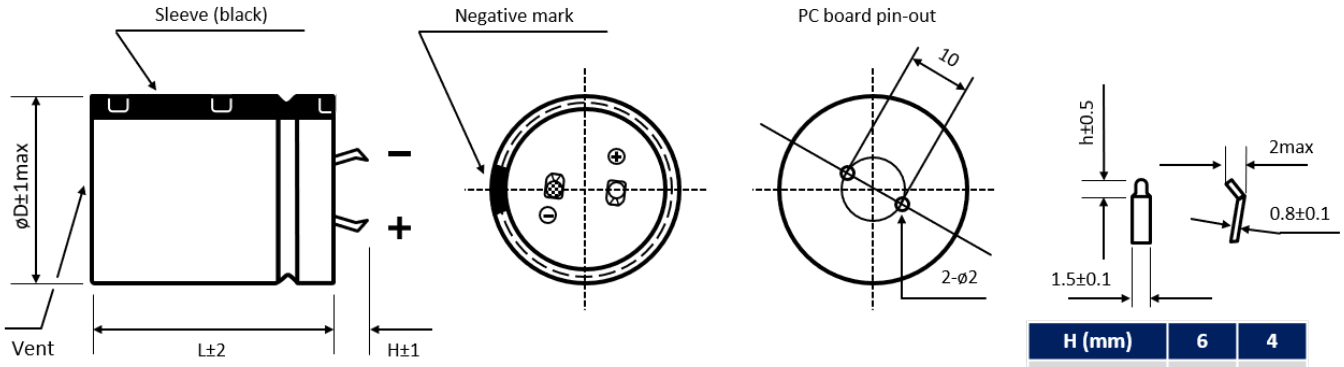

H (mm)	6	4
h (mm)	2.5	1.5

Standard: H = 6 ± 1mm. Also available H = 4 ± 1mm

For further information please contact sales@capxon.org

DIMENSIONS ▪ All dimensions in mm

3-pin version ▪ Polarity protection

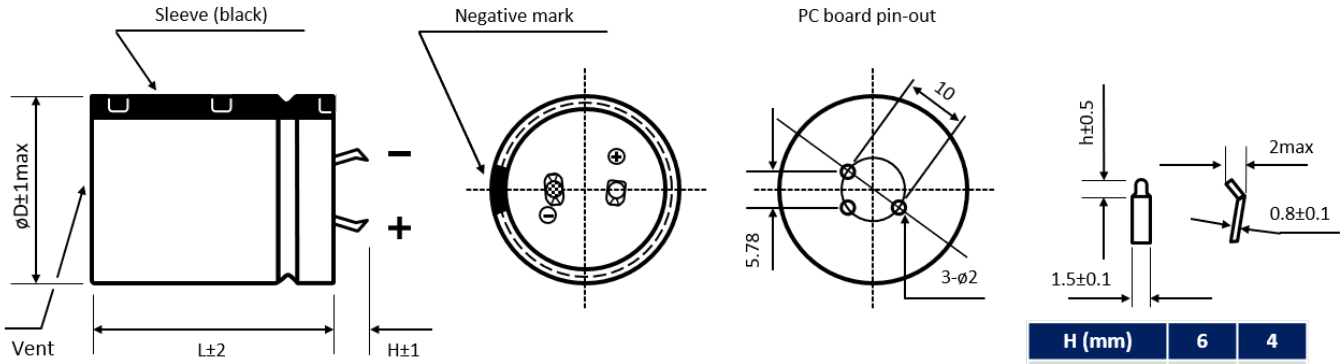

H (mm)	6	4
h (mm)	2.5	1.5

Standard: H = 4 ± 1mm. Also available H = 6 ± 1mm

Multipin version ▪ Diameter ø D ≥ 30 mm

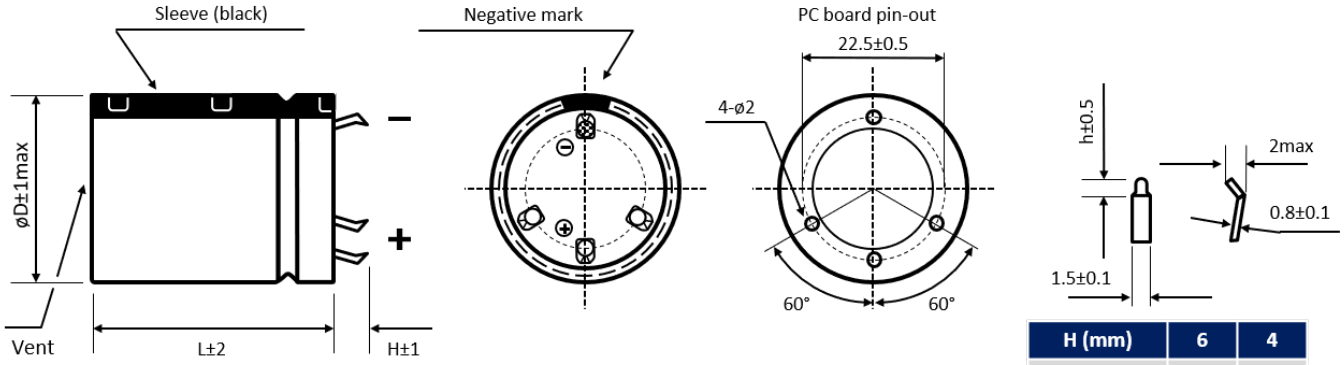

H (mm)	6	4
h (mm)	2.5	1.5

Standard: H = 6 ± 1mm. Also available H = 4 ± 1mm

Further possible terminal styles can be found in our packaging information liquid snap-in.

MULTIPLIER K_f for RIPPLE CURRENT vs. FREQUENCY

V_R (V) / Frequency (Hz)	50/60	100/120	300	1k	10k	50k - 100k
$10 \le V_R \le 100$	0.88	1	1.07	1.15	1.15	1.15
$160 \le V_R \le 250$	0.81	1	1.17	1.32	1.45	1.5
$315 \le V_R \le 600$	0.77	1	1.16	1.3	1.41	1.43

PRECAUTIONS, GUIDELINES AND PACKAGING INFORMATON

Unless otherwise agreed in individual specifications, all products are subject to our “General Precautions and Guidelines” as well as our “Packaging Information”. Please refer to the following pages in the table.

General Precautions and Guidelines	Packaging Information Liquid Snap-In
Page 837	Page 579

For further information please contact sales@capxon.org

USEFUL LIFE

$V_R \leq 100V$

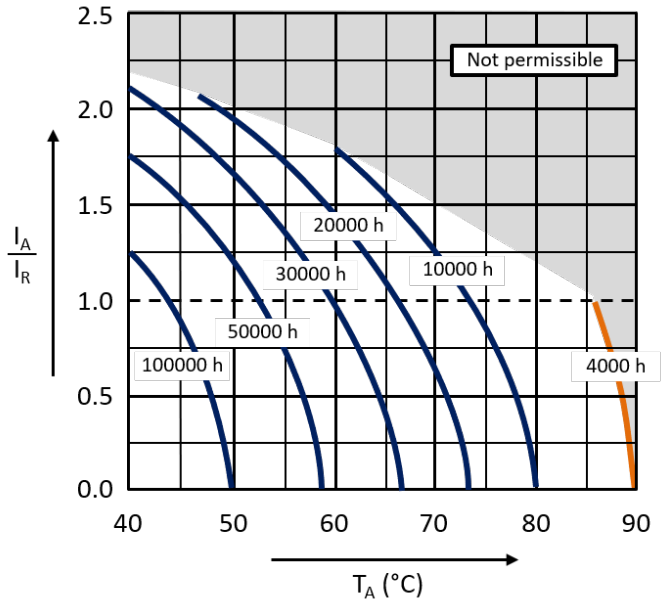

$V_R \geq 160V$

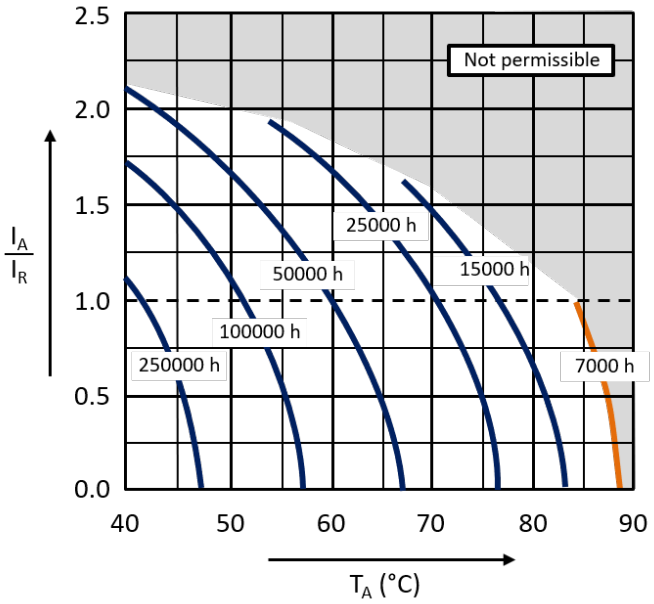

With: I_A: Application current
I_R: Rated ripple current (A RMS)
T_A: Application temperature of the capacitor

DISCLAIMER
All product related data (e.g. specification, statements and general information) are subject to change without any notice. It is necessary that the customer observes all product related technical / application information and handling instructions.

CapXon products are designed and manufactured according to severe quality and safety standards. Under no circumstance, CapXon warrants that any CapXon product is suitable for the purposes intended for your application, even CapXon knows the application. It is customer's duty and obligation to check and make sure that CapXon products are suitable for the purposes intended and select the correct and proper CapXon product. Customers are requested to perform a sufficient validation and reliability evaluation to assure needed safety level and reliability performance by suitable designs and to apply proper safeguards (e.g. redundancies, protective circuits).

Particular operating conditions (ambient temperature, ripple current, voltage, thermal resistance, etc.) as well as storage, production or assembly may affect the performance and the lifetime of the capacitor. Please consult CapXon for lifetime estimation, failure mode considerations or worst-case scenarios according to the product technology, product tolerances / deviations or change of the characteristics of the capacitor due to shipment, storage, handling, production and usage.

For aerospace or military application, life-saving, life-sustaining, safety critical applications or any application where failure may cause severe personal injury or death, please consult us before design-in the capacitor in your application.

Except for the written expressed warranties, CapXon does not impliedly, by assumption or whatever else, warrant, undertake, promise any other warranty or guaranty for any CapXon product.

For further information, please visit our website www.capxongroup.com or contact CapXon directly.

UC SERIES ▪ ULTRA LONG LIFE 85°C TYPE



KEY FEATURES

HIGH VOLTAGE · LONG LIFE

- **ALUMINUM ELECTROLYTIC CAPACITOR** ▪ Snap-In type
- Useful life: 85°C ▪ 7000 hours
- Extremely stable dissipation factor and leakage current
- High voltage up to 630V
- Especially for applications with demanding operating environment

HF Halogen Free · RoHS & REACH COMPLIANT

SPECIFICATIONS

Items		Performance Characteristics	
Operating Temperature Range		-40 ~ +85°C	-25 ~ +85°C
Rated Voltage Range	V_R	200 ~ 450V DC	500 ~ 630V DC
Surge Voltage	V_S	($V_R \le 315V$) ▪ $V_S = 1.15 \cdot V_R$	($V_R > 315V$) ▪ $V_S = 1.10 \cdot V_R$
Capacitance Range	C_R	68 ~ 2700µF	56 ~ 1500µF
Cap. Tolerance	ΔC	±20% (120Hz ▪ 20°C)	
Leakage Current (20°C ▪ V_R applied)	I_{LEAK}	≤ √3·C_R·V_R ▪ After 5 minutes [I_{LEAK} (µA) ; C_R (µF) ; V_R (V)]	

Dissipation Factor % (20°C ▪ 120Hz)	tanδ	V_R (V DC)	200 ~ 400	450 ~ 630
		tanδ	15	20

Self-Resistance (20°C ▪ 120Hz)	ESR	Not to exceed the values shown in standard ratings

Low Temperature Characteristics at 120Hz	Z ratio max.	V_R (V DC)	200 ~ 250	315 ~ 450	500	575 ~ 630
		Z-25°C/Z+20°C	4	5	6	7
		Z-40°C/Z+20°C	7	10	-	-

Lifetime Test		
Useful Life 85°C (V_R & I_R applied)	Test	**7000 hours**
	△C/C_R	≤ ±20% of initial measured value
	tanδ	≤ 200% of initial specified value
	I_{Leak}	≤ the initial specified value
	Deviation Rate @ Useful Life: 10 000 FIT = 1%/1000h with 60% confidence level ▪ parts show higher drift as test criteria	
Endurance 85°C (V_R & I_R applied)	Test	**3000 hours**
	△C/C_R	≤ ±15% of initial measured value
	tanδ	≤ 175% of initial specified value
	I_{Leak}	≤ the initial specified value
Shelf Life 85°C (V_R = 0)	Test	**1000 hours**
	△C/C_R	≤ ±15% of initial measured value
	tanδ	≤ 175% of initial specified value
	I_{Leak}	≤ the initial specified value
	Before measurement: Restore capacitor to 20°C, apply V_R for 30 min according JIS-C-5101-4	
Vibration Resistance Test	Max. 10g force, f_{RANGE} 10Hz … 55Hz, amplitude 0.75mm; X/Y/Z-axis each 2h; capacitor rigidly clamped by body to surface ▪ IEC 60068-2-6	

For further information please contact sales@capxon.org

STANDARD RATINGS

V_R (V)	C_R (µF)	ø D (mm)	L (mm)	Typ. ESR +20°C ▪ 120Hz (mΩ)	Max. ESR +20°C ▪ 120Hz (mΩ)	I_R ▪ Max. Ripple Current +85°C ▪ 120Hz (mA rms)	CapXon Part Number
200	220	22	25	510	900	1160	UC221M200M250A □□
	270	22	25	420	740	1310	UC271M200M250A □□
	330	22	25	340	600	1410	UC331M200M250A □□
	390	22	25	290	510	1430	UC391M200M250A □□
	470	22	30	240	420	1690	UC471M200M300A □□
	470	25	25	240	420	1690	UC471M200N250A □□
	560	22	35	210	360	2060	UC561M200M350A □□
	560	25	30	210	360	2060	UC561M200N300A □□
	560	30	25	210	360	2060	UC561M200O250A □□
	680	22	40	170	290	2260	UC681M200M400A □□
	680	25	30	170	290	2150	UC681M200N300A □□
	680	30	25	170	290	2230	UC681M200O250A □□
	820	22	45	140	240	2620	UC821M200M450A □□
	820	25	35	140	240	2620	UC821M200N350A □□
	820	30	30	140	240	2630	UC821M200O300A □□
	820	35	25	140	240	2690	UC821M200P250A □□
	1000	22	50	110	200	2700	UC102M200M500A □□
	1000	25	40	110	200	2640	UC102M200N400A □□
	1000	30	30	110	200	2630	UC102M200O300A □□
	1000	35	25	110	200	2690	UC102M200P250A □□
	1200	25	45	97	170	2900	UC122M200N450A □□
	1200	30	35	97	170	2900	UC122M200O350A □□
	1200	35	30	97	170	3000	UC122M200P300A □□
	1500	25	55	74	130	3450	UC152M200N550A □□
	1500	30	45	74	130	3470	UC152M200O450A □□
	1500	35	35	74	130	3450	UC152M200P350A □□
	1800	30	50	63	110	4000	UC182M200O500A □□
	1800	35	40	63	110	4000	UC182M200P400A □□
	2200	30	60	52	90	4600	UC222M200O600A □□
	2200	35	45	52	90	4430	UC222M200P450A □□
	2200	40	40	52	90	4520	UC222M200Q400A □□
	2700	35	55	42	74	5000	UC272M200P550A □□
	2700	40	50	42	74	5240	UC272M200Q500A □□
	3300	35	65	34	60	5850	UC332M200P650A □□
	3300	40	60	34	60	5910	UC332M200Q600A □□
	3900	35	80	29	51	6320	UC392M200P800A □□
	3900	40	60	29	51	6000	UC392M200Q600A □□
	4700	40	70	24	42	6810	UC472M200Q700A □□
	5600	40	80	20	36	7450	UC562M200Q800A □□
	6800	40	100	17	29	8680	UC682M200QA00A □□
250	180	22	25	630	1110	1010	UC181M250M250A □□
	220	22	25	510	900	1260	UC221M250M250A □□
	270	22	25	420	740	1410	UC271M250M250A □□
	330	22	30	340	600	1590	UC331M250M300A □□

□□: See description at end of standard ratings

For further information please contact sales@capxon.org

STANDARD RATINGS

V_R (V)	C_R (µF)	ø D (mm)	L (mm)	Typ. ESR +20°C ▪ 120Hz (mΩ)	Max. ESR +20°C ▪ 120Hz (mΩ)	I_R ▪ Max. Ripple Current +85°C ▪ 120Hz (mA rms)	CapXon Part Number
250	330	25	25	340	600	1540	UC331M250N250A □□
	390	22	30	290	510	1600	UC391M250M300A □□
	390	25	25	290	510	1580	UC391M250N250A □□
	470	22	35	240	420	1740	UC471M250M350A □□
	470	25	30	240	420	1740	UC471M250N300A □□
	470	30	25	240	420	1810	UC471M250O250A □□
	560	22	45	210	360	2130	UC561M250M450A □□
	560	25	35	210	360	2050	UC561M250N350A □□
	560	30	25	210	360	2020	UC561M250O250A □□
	680	22	50	170	290	2500	UC681M250M500A □□
	680	25	45	170	290	2550	UC681M250N450A □□
	680	30	30	170	290	2400	UC681M250O300A □□
	820	25	50	140	240	2930	UC821M250N500A □□
	820	30	35	140	240	2800	UC821M250O350A □□
	820	35	30	140	240	2900	UC821M250P300A □□
	1000	25	55	110	200	3070	UC102M250N550A □□
	1000	30	45	110	200	3120	UC102M250O450A □□
	1000	35	35	110	200	3070	UC102M250P350A □□
	1200	25	60	97	170	3350	UC122M250N600A □□
	1200	30	50	97	170	3410	UC122M250O500A □□
	1200	35	35	97	170	3210	UC122M250P350A □□
	1500	30	60	74	130	4100	UC152M250O600A □□
	1500	35	45	74	130	3950	UC152M250P450A □□
	1500	40	40	74	130	4050	UC152M250Q400A □□
	1800	30	65	63	110	4300	UC182M250O650A □□
	1800	35	50	63	110	4200	UC182M250P500A □□
	1800	40	45	63	110	4300	UC182M250Q450A □□
	2200	35	60	52	90	4950	UC222M250P600A □□
	2200	40	50	52	90	4950	UC222M250Q500A □□
	2700	35	80	42	74	6100	UC272M250P800A □□
	2700	40	70	42	74	6100	UC272M250Q700A □□
	3300	35	80	34	60	6520	UC332M250P800A □□
	3300	40	70	34	60	6610	UC332M250Q700A □□
	3900	40	80	29	51	7500	UC392M250Q800A □□
	4700	40	100	24	42	8910	UC472M250QA00A □□
350	82	22	20	1390	2430	650	UC820M350M200A □□
	100	22	25	1140	1990	780	UC101M350M250A □□
	100	25	20	1140	1990	750	UC101M350N200A □□
	120	22	25	950	1660	1000	UC121M350M250A □□
	120	25	20	950	1660	980	UC121M350N200A □□
	150	22	30	760	1330	1260	UC151M350M300A □□
	150	25	25	760	1330	1260	UC151M350N250A □□
	180	22	35	630	1110	1300	UC181M350M350A □□
	180	25	30	630	1110	1320	UC181M350N300A □□

□□: See description at end of standard ratings

For further information please contact sales@capxon.org

STANDARD RATINGS

V_R (V)	C_R (µF)	ø D (mm)	L (mm)	Typ. ESR +20°C ▪ 120Hz (mΩ)	Max. ESR +20°C ▪ 120Hz (mΩ)	I_R ▪ Max. Ripple Current +85°C ▪ 120Hz (mA rms)	CapXon Part Number
350	180	30	25	630	1110	1380	UC181M350O250A □□
	220	22	40	510	900	1410	UC221M350M400A □□
	220	25	30	510	900	1480	UC221M350N300A □□
	220	30	25	510	900	1480	UC221M350O250A □□
	270	22	45	420	740	1630	UC271M350M450A □□
	270	25	35	420	740	1660	UC271M350N350A □□
	270	30	30	420	740	1710	UC271M350O300A □□
	270	35	25	420	740	1720	UC271M350P250A □□
	330	22	50	340	600	1900	UC331M350M500A □□
	330	25	40	340	600	1850	UC331M350N400A □□
	330	30	30	340	600	1750	UC331M350O300A □□
	330	35	25	340	600	1780	UC331M350P250A □□
	390	25	45	290	510	2100	UC391M350N450A □□
	390	30	35	290	510	2150	UC391M350O350A □□
	390	35	30	290	510	2200	UC391M350P300A □□
	470	30	40	240	420	2520	UC471M350O400A □□
	470	35	30	240	420	2360	UC471M350P300A □□
	560	30	45	210	360	2630	UC561M350O450A □□
	560	35	35	210	360	2630	UC561M350P350A □□
	680	35	40	170	290	2800	UC681M350P400A □□
	820	35	45	140	240	3360	UC821M350P450A □□
	1000	35	60	110	200	4600	UC102M350P600A □□
	1000	40	50	110	200	4480	UC102M350Q500A □□
	1200	35	60	97	170	4650	UC122M350P600A □□
	1200	40	50	97	170	4650	UC122M350Q500A □□
	1500	35	80	74	130	6100	UC152M350P800A □□
	1500	40	70	74	130	6100	UC152M350Q700A □□
	1500	45	60	74	130	6150	UC152M350V600A □□
	1800	40	80	63	110	7000	UC182M350Q800A □□
	1800	45	70	63	110	7000	UC182M350V700A □□
	2200	45	80	52	90	8070	UC222M350V800A □□
	2700	45	100	42	74	9480	UC272M350VA00A □□
400	68	22	20	1670	2930	670	UC680M400M200A □□
	82	22	25	1390	2430	810	UC820M400M250A □□
	100	22	25	1140	1990	820	UC101M400M250A □□
	100	25	20	1140	1990	800	UC101M400N200A □□
	120	22	25	950	1660	1010	UC121M400M250A □□
	120	25	20	950	1660	1010	UC121M400N200A □□
	150	22	25	760	1330	1400	UC151M400M250A □□
	150	22	30	760	1330	1480	UC151M400M300A □□
	150	25	25	760	1330	1480	UC151M400N250A □□
	180	22	30	630	1110	1580	UC181M400M300A □□
	180	22	35	630	1110	1650	UC181M400M350A □□
	180	25	30	630	1110	1630	UC181M400N300A □□

□□: See description at end of standard ratings

For further information please contact sales@capxon.org

STANDARD RATINGS

V_R (V)	C_R (µF)	ø D (mm)	L (mm)	Typ. ESR +20°C ▪ 120Hz (mΩ)	Max. ESR +20°C ▪ 120Hz (mΩ)	I_R ▪ Max. Ripple Current +85°C ▪ 120Hz (mA rms)	CapXon Part Number
400	180	30	25	630	1110	1650	UC181M400O250A □□
	220	22	30	510	900	1740	UC221M400M300A □□
	220	22	35	510	900	1820	UC221M400M350A □□
	220	25	25	510	900	1780	UC221M400N250A □□
	220	25	30	510	900	1800	UC221M400N300A □□
	220	30	25	510	900	1800	UC221M400O250A □□
	270	22	35	420	740	1990	UC271M400M350A □□
	270	22	40	420	740	2060	UC271M400M400A □□
	270	25	30	420	740	2060	UC271M400N300A □□
	270	25	35	420	740	2160	UC271M400N350A □□
	270	30	25	420	740	2060	UC271M400O250A □□
	270	30	30	420	740	2100	UC271M400O300A □□
	330	22	45	340	600	2320	UC331M400M450A □□
	330	22	50	340	600	2400	UC331M400M500A □□
	330	25	35	340	600	2230	UC331M400N350A □□
	330	25	40	340	600	2320	UC331M400N400A □□
	330	30	30	340	600	2230	UC331M400O300A □□
	330	30	35	340	600	2270	UC331M400O350A □□
	330	30	40	340	600	2320	UC331M400O400A □□
	330	35	25	340	600	2230	UC331M400P250A □□
	330	35	35	340	600	2320	UC331M400P350A □□
	390	22	50	290	510	2640	UC391M400M500A □□
	390	25	40	290	510	2500	UC391M400N400A □□
	390	30	30	290	510	2300	UC391M400O300A □□
	390	30	35	290	510	2410	UC391M400O350A □□
	390	30	40	290	510	2640	UC391M400O400A □□
	390	35	25	290	510	2300	UC391M400P250A □□
	390	35	30	290	510	2410	UC391M400P300A □□
	390	35	35	290	510	2640	UC391M400P350A □□
	470	25	45	240	420	2810	UC471M400N450A □□
	470	25	55	240	420	2950	UC471M400N550A □□
	470	30	35	240	420	2610	UC471M400O350A □□
	470	30	40	240	420	2700	UC471M400O400A □□
	470	30	50	240	420	2860	UC471M400O500A □□
	470	35	30	240	420	2610	UC471M400P300A □□
	470	35	40	240	420	2810	UC471M400P400A □□
	470	35	45	240	420	2860	UC471M400P450A □□
	560	25	55	210	360	3240	UC561M400N550A □□
	560	30	40	210	360	3100	UC561M400O400A □□
	560	30	45	210	360	3210	UC561M400O450A □□
	560	30	55	210	360	3360	UC561M400O550A □□
	560	35	35	210	360	3100	UC561M400P350A □□
	560	35	45	210	360	3360	UC561M400P450A □□
	680	30	50	170	290	3400	UC681M400O500A □□

□□: See description at end of standard ratings

For further information please contact sales@capxon.org

STANDARD RATINGS

V_R (V)	C_R (µF)	ø D (mm)	L (mm)	Typ. ESR +20°C ▪ 120Hz (mΩ)	Max. ESR +20°C ▪ 120Hz (mΩ)	I_R ▪ Max. Ripple Current +85°C ▪ 120Hz (mA rms)	CapXon Part Number
400	680	30	55	170	290	3550	UC681M400O550A □□
	680	35	40	170	290	3400	UC681M400P400A □□
	680	35	50	170	290	3550	UC681M400P500A □□
	820	30	55	140	240	3740	UC821M400O550A □□
	820	30	60	140	240	3850	UC821M400O600A □□
	820	35	45	140	240	3450	UC821M400P450A □□
	820	35	50	140	240	3740	UC821M400P500A □□
	820	35	55	140	240	3850	UC821M400P550A □□
	1000	35	55	110	200	4600	UC102M400P550A □□
	1000	35	70	110	200	4760	UC102M400P700A □□
	1000	40	45	110	200	4480	UC102M400Q450A □□
	1000	40	60	110	200	4760	UC102M400Q600A □□
	1000	45	40	110	200	4480	UC102M400V400A □□
	1200	35	55	97	170	4600	UC122M400P550A □□
	1200	35	60	97	170	4770	UC122M400P600A □□
	1200	35	65	97	170	4900	UC122M400P650A □□
	1200	40	60	97	170	4950	UC122M400Q600A □□
	1200	45	50	97	170	5200	UC122M400V500A □□
	1500	35	80	74	130	6200	UC152M400P800A □□
	1500	40	70	74	130	6200	UC152M400Q700A □□
	1500	45	60	74	130	6200	UC152M400V600A □□
	1800	40	80	63	110	7100	UC182M400Q800A □□
	1800	45	70	63	110	7100	UC182M400V700A □□
	2200	45	85	52	90	8250	UC222M400V850A □□
450	68	22	20	2230	3900	680	UC680M450M200A □□
	82	22	25	1850	3230	820	UC820M450M250A □□
	100	22	25	1510	2650	840	UC101M450M250A □□
	120	22	25	1260	2210	1300	UC121M450M250A □□
	120	22	30	1260	2210	1360	UC121M450M300A □□
	120	25	25	1260	2210	1400	UC121M450N250A □□
	150	22	30	1010	1770	1530	UC151M450M300A □□
	150	22	35	1010	1770	1590	UC151M450M350A □□
	150	25	30	1010	1770	1590	UC151M450N300A □□
	150	30	25	1010	1770	1550	UC151M450O250A □□
	180	22	35	840	1470	1650	UC181M450M350A □□
	180	22	40	840	1470	1710	UC181M450M400A □□
	180	25	35	840	1470	1710	UC181M450N350A □□
	180	30	25	840	1470	1690	UC181M450O250A □□
	220	22	35	690	1210	1790	UC221M450M350A □□
	220	22	40	690	1210	1880	UC221M450M400A □□
	220	25	30	690	1210	1850	UC221M450N300A □□
	220	30	30	690	1210	1900	UC221M450O300A □□
	270	22	40	560	980	2150	UC271M450M400A □□
	270	22	45	560	980	2220	UC271M450M450A □□

□□: See description at end of standard ratings

For further information please contact sales@capxon.org

STANDARD RATINGS

V_R (V)	C_R (µF)	ø D (mm)	L (mm)	Typ. ESR +20°C ▪ 120Hz (mΩ)	Max. ESR +20°C ▪ 120Hz (mΩ)	I_R ▪ Max. Ripple Current +85°C ▪ 120Hz (mA rms)	CapXon Part Number
450	270	25	35	560	980	2120	UC271M450N350A □□
	270	30	30	560	980	2120	UC271M450O300A □□
	330	22	50	460	800	2410	UC331M450M500A □□
	330	22	55	460	800	2460	UC331M450M550A □□
	330	25	40	460	800	2410	UC331M450N400A □□
	330	25	45	460	800	2440	UC331M450N450A □□
	330	30	30	460	800	2220	UC331M450O300A □□
	330	30	35	460	800	2410	UC331M450O350A □□
	330	35	25	460	800	2110	UC331M450P250A □□
	390	25	50	390	680	2650	UC391M450N500A □□
	390	30	35	390	680	2510	UC391M450O350A □□
	390	30	40	390	680	2650	UC391M450O400A □□
	390	35	30	390	680	2390	UC391M450P300A □□
	470	25	55	320	560	3090	UC471M450N550A □□
	470	30	40	320	560	2820	UC471M450O400A □□
	470	30	45	320	560	3090	UC471M450O450A □□
	470	35	35	320	560	2820	UC471M450P350A □□
	470	35	40	320	560	3090	UC471M450P400A □□
	470	35	45	320	560	3200	UC471M450P450A □□
	560	25	60	270	470	3400	UC561M450N600A □□
	560	30	50	270	470	3170	UC561M450O500A □□
	560	30	55	270	470	3230	UC561M450O550A □□
	560	35	35	270	470	2820	UC561M450P350A □□
	560	35	40	270	470	3170	UC561M450P400A □□
	680	30	55	220	390	3500	UC681M450O550A □□
	680	35	45	220	390	3400	UC681M450P450A □□
	680	35	50	220	390	3500	UC681M450P500A □□
	680	40	40	220	390	3400	UC681M450Q400A □□
	820	35	50	180	320	3600	UC821M450P500A □□
	820	35	55	180	320	3860	UC821M450P550A □□
	820	40	50	180	320	4100	UC821M450Q500A □□
	820	45	45	180	320	4100	UC821M450V450A □□
	1000	35	55	150	270	4600	UC102M450P550A □□
	1000	35	60	150	270	4710	UC102M450P600A □□
	1000	40	55	150	270	4710	UC102M450Q550A □□
	1000	45	50	150	270	4710	UC102M450V500A □□
	1200	35	80	130	220	5520	UC122M450P800A □□
	1200	40	65	130	220	5430	UC122M450Q650A □□
	1200	45	55	130	220	5200	UC122M450V550A □□
	1500	45	70	100	180	6280	UC152M450V700A □□
	1800	45	80	86	150	7100	UC182M450V800A □□
	2200	45	90	69	120	8500	UC222M450V900A □□
500	56	22	25	2710	4740	600	UC560M500M250A □□
	68	22	25	2230	3900	640	UC680M500M250A □□
	68	25	20	2230	3900	630	UC680M500N200A □□

□□: See description at end of standard ratings

For further information please contact sales@capxon.org

STANDARD RATINGS

V_R (V)	C_R (µF)	ø D (mm)	L (mm)	Typ. ESR +20°C ▪ 120Hz (mΩ)	Max. ESR +20°C ▪ 120Hz (mΩ)	I_R ▪ Max. Ripple Current +85°C ▪ 120Hz (mA rms)	CapXon Part Number
500	82	22	30	1850	3230	760	UC820M500M300A □□
	82	25	25	1850	3230	760	UC820M500N250A □□
	100	22	35	1510	2650	870	UC101M500M350A □□
	100	25	30	1510	2650	870	UC101M500N300A □□
	100	30	20	1510	2650	850	UC101M500O200A □□
	120	22	40	1260	2210	1050	UC121M500M400A □□
	120	25	30	1260	2210	1050	UC121M500N300A □□
	120	30	25	1260	2210	1050	UC121M500O250A □□
	150	22	45	1010	1770	1200	UC151M500M450A □□
	150	25	35	1010	1770	1200	UC151M500N350A □□
	150	30	30	1010	1770	1200	UC151M500O300A □□
	150	35	25	1010	1770	1200	UC151M500P250A □□
	180	22	50	840	1470	1350	UC181M500M500A □□
	180	25	40	840	1470	1310	UC181M500N400A □□
	180	30	30	840	1470	1300	UC181M500O300A □□
	180	35	25	840	1470	1230	UC181M500P250A □□
	220	30	35	690	1210	1520	UC221M500O350A □□
	220	35	30	690	1210	1550	UC221M500P300A □□
	270	30	40	560	980	1780	UC271M500O400A □□
	270	35	35	560	980	1830	UC271M500P350A □□
	330	30	50	460	800	2160	UC331M500O500A □□
	330	35	35	460	800	2040	UC331M500P350A □□
	390	35	45	390	680	2450	UC391M500P450A □□
	390	35	50	390	680	2580	UC391M500P500A □□
	470	35	50	320	560	2800	UC471M500P500A □□
	470	35	55	320	560	2920	UC471M500P550A □□
	560	35	60	270	470	3370	UC561M500P600A □□
	560	40	50	270	470	3320	UC561M500Q500A □□
	680	35	70	220	390	3920	UC681M500P700A □□
	680	40	55	220	390	3830	UC681M500Q550A □□
	680	40	60	220	390	3920	UC681M500Q600A □□
	820	35	80	180	320	4570	UC821M500P800A □□
	820	40	60	180	320	4350	UC821M500Q600A □□
	1000	40	80	150	270	5450	UC102M500Q800A □□
	1500	40	100	100	180	6580	UC152M500QA00A □□
575	180	30	45	840	1470	1160	UC181M575O450A □□
	220	30	50	690	1210	1310	UC221M575O500A □□
	270	30	60	560	980	1650	UC271M575O600A □□
	270	35	45	560	980	1650	UC271M575P450A □□
	330	30	70	460	800	1760	UC331M575O700A □□
	330	35	50	460	800	1760	UC331M575P500A □□
	330	40	45	460	800	1760	UC331M575Q450A □□
	390	30	85	390	680	2000	UC391M575O850A □□
	390	35	60	390	680	2000	UC391M575P600A □□
	390	40	55	390	680	2000	UC391M575Q550A □□

□□: See description at end of standard ratings

For further information please contact sales@capxon.org

STANDARD RATINGS

V_R (V)	C_R (µF)	ø D (mm)	L (mm)	Typ. ESR +20°C ▪ 120Hz (mΩ)	Max. ESR +20°C ▪ 120Hz (mΩ)	I_R ▪ Max. Ripple Current +85°C ▪ 120Hz (mA rms)	CapXon Part Number
575	470	35	70	320	560	2250	UC471M575P700A ☐☐
	470	40	60	320	560	2250	UC471M575Q600A ☐☐
	470	45	50	320	560	2250	UC471M575V500A ☐☐
	560	35	80	270	470	2500	UC561M575P800A ☐☐
	560	40	70	270	470	2500	UC561M575Q700A ☐☐
	560	45	55	270	470	2500	UC561M575V550A ☐☐
	680	35	95	220	390	2850	UC681M575P950A ☐☐
	680	40	80	220	390	2850	UC681M575Q800A ☐☐
	680	45	65	220	390	2850	UC681M575V650A ☐☐
	820	40	100	180	320	3200	UC821M575QA00A ☐☐
	820	45	75	180	320	3200	UC821M575V750A ☐☐
	1000	45	90	150	270	3360	UC102M575V900A ☐☐
	1200	45	105	130	220	3560	UC122M575VA05A ☐☐
600	150	30	45	1010	1770	1100	UC151M600O450A ☐☐
	180	30	50	840	1470	1110	UC181M600O500A ☐☐
	220	30	60	690	1210	1240	UC221M600O600A ☐☐
	270	30	70	560	980	1350	UC271M600O700A ☐☐
	330	30	80	460	800	1360	UC331M600O800A ☐☐
	330	40	50	460	800	1360	UC331M600Q500A ☐☐
	390	40	60	390	680	1600	UC391M600Q600A ☐☐
	470	40	70	320	560	1750	UC471M600Q700A ☐☐
	470	45	55	320	560	1750	UC471M600V550A ☐☐
	560	40	80	270	470	1900	UC561M600Q800A ☐☐
	560	45	60	270	470	1900	UC561M600V600A ☐☐
	680	40	90	220	390	2000	UC681M600Q900A ☐☐
	680	45	70	220	390	2000	UC681M600V700A ☐☐
	820	45	85	180	320	2500	UC821M600V850A ☐☐
	1000	45	100	150	270	2900	UC102M600VA00A ☐☐
630	150	30	45	1010	1770	1000	UC151M630O450A ☐☐
	180	30	50	840	1470	1020	UC181M630O500A ☐☐
	220	30	60	690	1210	1110	UC221M630O600A ☐☐
	270	30	70	560	980	1300	UC271M630O700A ☐☐
	330	30	85	460	800	1330	UC331M630O850A ☐☐
	330	40	50	460	800	1330	UC331M630Q500A ☐☐
	470	40	70	320	560	1700	UC471M630Q700A ☐☐
	470	45	55	320	560	1700	UC471M630V550A ☐☐
	560	40	80	270	470	1800	UC561M630Q800A ☐☐
	560	45	65	270	470	1800	UC561M630V650A ☐☐
	680	40	95	220	390	1950	UC681M630Q950A ☐☐
	680	45	75	220	390	1950	UC681M630V750A ☐☐
	820	45	90	180	320	2300	UC821M630V900A ☐☐
	1000	45	105	150	270	2300	UC102M630VA05A ☐☐

☐☐☐: Enter **P6** for standard type ▪ 6mm pin length
☐☐☐: Enter **Z6** for 3-pin type ▪ 6mm pin length
☐☐☐: Enter **Y6** for multipin-type ▪ 6mm pin length
☐☐☐: Enter **P4** for standard type ▪ 4mm pin length
☐☐☐: Enter **Z4** for 3-pin type ▪ 4mm pin length
☐☐☐: Enter **Y4** for multipin type ▪ 4mm pin length

For further information please contact sales@capxon.org

DIMENSIONS ▪ All dimensions in mm

2-pin version ▪ Standard type

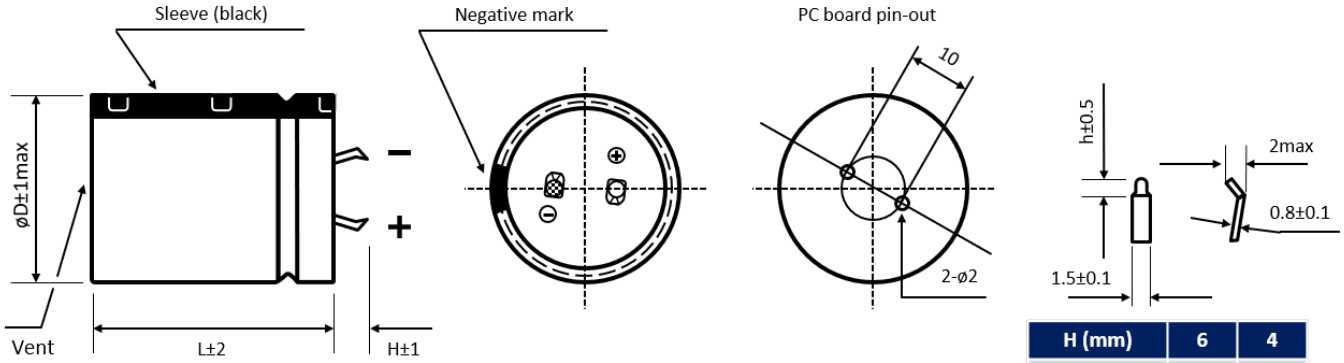

H (mm)	6	4
h (mm)	2.5	1.5

Standard: H = 6 ± 1mm. Also available H = 4 ± 1mm

3-pin version ▪ Polarity protection

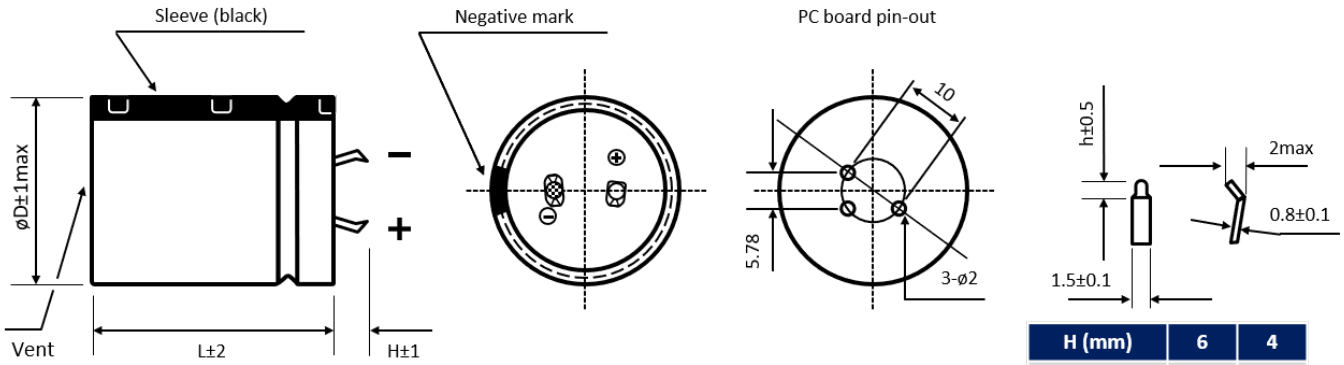

H (mm)	6	4
h (mm)	2.5	1.5

Standard: H = 4 ± 1mm. Also available H = 6 ± 1mm

Multipin version ▪ Diameter ø D ≥ 30 mm

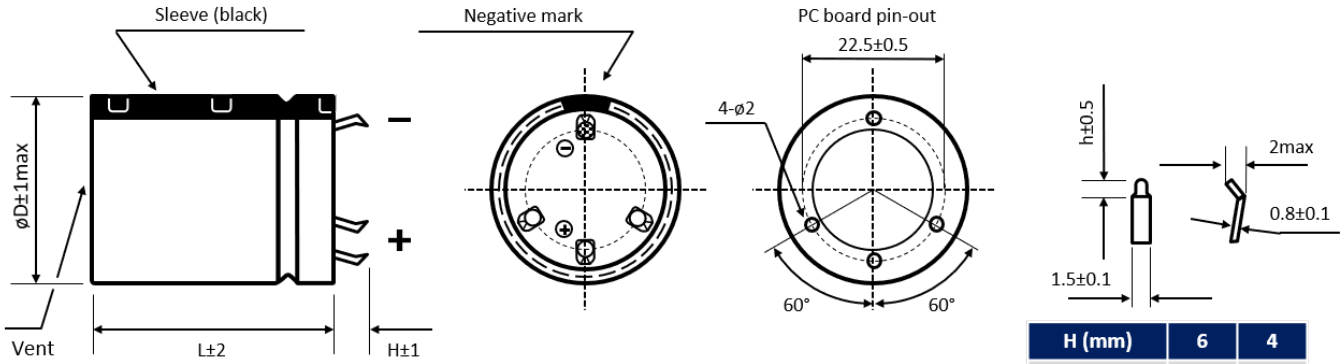

H (mm)	6	4
h (mm)	2.5	1.5

Standard: H = 6 ± 1mm. Also available H = 4 ± 1mm

Further possible terminal styles can be found in our packaging information liquid snap-in.

For further information please contact sales@capxon.org

MULTIPLIER K_f for RIPPLE CURRENT vs. FREQUENCY

V_R (V) / Frequency (Hz)	50/60	100/120	300	1k	10k	50k - 100k
$200 \le V_R \le 250$	0.81	1	1.17	1.32	1.45	1.5
$350 \le V_R \le 630$	0.77	1	1.16	1.3	1.41	1.43

PRECAUTIONS, GUIDELINES AND PACKAGING INFORMATON

Unless otherwise agreed in individual specifications, all products are subject to our “General Precautions and Guidelines” as well as our “Packaging Information”. Please refer to the following pages in the table.

General Precautions and Guidelines	Packaging Information Liquid Snap-In
Page 837	Page 579

USEFUL LIFE

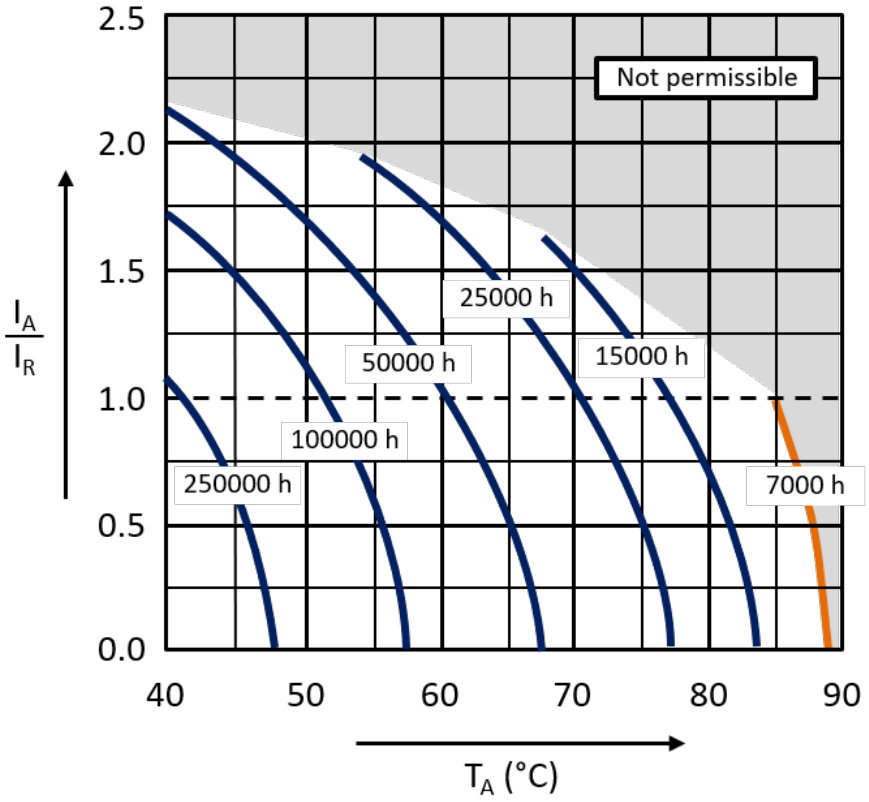

With: I_A: Application current
I_R: Rated ripple current (A RMS)
T_A: Application temperature of the capacitor

For further information please contact sales@capxon.org

DISCLAIMER

All product related data (e.g. specification, statements and general information) are subject to change without any notice. It is necessary that the customer observes all product related technical / application information and handling instructions.

CapXon products are designed and manufactured according to severe quality and safety standards. Under no circumstance, CapXon warrants that any CapXon product is suitable for the purposes intended for your application, even CapXon knows the application. It is customer's duty and obligation to check and make sure that CapXon products are suitable for the purposes intended and select the correct and proper CapXon product. Customers are requested to perform a sufficient validation and reliability evaluation to assure needed safety level and reliability performance by suitable designs and to apply proper safeguards (e.g. redundancies, protective circuits).

Particular operating conditions (ambient temperature, ripple current, voltage, thermal resistance, etc.) as well as storage, production or assembly may affect the performance and the lifetime of the capacitor. Please consult CapXon for lifetime estimation, failure mode considerations or worst-case scenarios according to the product technology, product tolerances / deviations or change of the characteristics of the capacitor due to shipment, storage, handling, production and usage.

For aerospace or military application, life-saving, life-sustaining, safety critical applications or any application where failure may cause severe personal injury or death, please consult us before design-in the capacitor in your application.

Except for the written expressed warranties, CapXon does not impliedly, by assumption or whatever else, warrant, undertake, promise any other warranty or guaranty for any CapXon product.

For further information, please visit our website www.capxongroup.com or contact CapXon directly.

LD SERIES ▪ ULTRA LONG LIFE 85°C TYPE



KEY FEATURES

HIGH VOLTAGE LONG LIFE

- **ALUMINUM ELECTROLYTIC CAPACITOR** ▪ Snap-In type
- Useful life: 85°C ▪ 7 000 hours up to 10 000 hours
- Wide capacitance range
- Small dimensions
- Stable operating under steady state environment

HF Halogen Free

RoHS & REACH COMPLIANT

SPECIFICATIONS

Items		Performance Characteristics									
Operating Temperature Range		-40 ~ +85°C						-25 ~ +85°C			
Rated Voltage Range	V_R	10 ~ 350V DC						400 ~ 500V DC			
Surge Voltage	V_S	($V_R \le 315V$): $V_S = 1.15 \cdot V_R$						($V_R > 315V$): $V_S = 1.10 \cdot V_R$			
Capacitance Range	C_R	82 ~ 100000µF						47 ~ 1800µF			
Cap. Tolerance	ΔC	±20% (120Hz ▪ 20°C)									
Leakage Current (20°C ▪ V_R applied)	I_{LEAK}	≤ √3·C_R·V_R ▪ After 5 minutes [I_{LEAK} (µA) ; C_R (µF) ; V_R (V)]									
Dissipation Factor % (20°C ▪ 120Hz)	tanδ	µF / V DC	10	16	25	35	50	63	80	100	160 ~ 420	450 ~ 500
		≤ 8200	35	35	30	25	20	20	15	15	15	20
		10000 ~ 22000	40	40	35	30	30	25	20	-	-	-
		≥ 27000	50	40	35	35	30	25	-	-	-	-
Low Temperature Characteristics at 120Hz	Z ratio max.	V_R (V DC)	10 ~ 16		25	35	50 ~ 100		160 ~ 250		315 ~ 350	400 ~ 500
		Z-25°C/Z+20°C	5		4	4	4		4		8	8
		Z-40°C/Z+20°C	15		15	12	12		8		12	-

Lifetime Test		$V_R \le 100V$	$V_R > 100V$
Useful Life 85°C (V_R & I_R applied)	Test	**7 000 hours**	**10 000 hours**
	△C/C_R	≤ ±30% of initial measured value	≤ ±20% of initial measured value
	tanδ	≤ 300% of initial specified value	≤ 200% of initial specified value
	I_{Leak}	≤ the initial specified value	≤ the initial specified value
	Deviation Rate @ Useful Life: 10 000 FIT = 1%/1000h with 60% confidence level ▪ parts show higher drift as test criteria		
Endurance 85°C (V_R & I_R applied)	Test	**5 000 hours**	
	△C/C_R	≤ ±20% of initial measured value	≤ ±15% of initial measured value
	tanδ	≤ 200% of initial specified value	≤ 175% of initial specified value
	I_{Leak}	≤ the initial specified value	≤ the initial specified value
Shelf Life 85°C (V_R = 0)	Test	**1 000 hours**	
	△C/C_R	≤ ±20% of initial measured value	≤ ±15% of initial measured value
	tanδ	≤ 200% of initial specified value	≤ 175% of initial specified value
	I_{Leak}	≤ the initial specified value	≤ the initial specified value
	Before measurement: Restore capacitor to 20°C, apply V_R for 30 min according JIS-C-5101-4		
Vibration Resistance Test	Max. 10g force, f_{RANGE} 10Hz … 55Hz, amplitude 0.75mm; X/Y/Z-axis each 2h; capacitor rigidly clamped by body to surface ▪ IEC 60068-2-6		

For further information please contact sales@capxon.org

STANDARD RATINGS

V_R (V)	C_R (µF)	ø D (mm)	L (mm)	Typ. ESR +20°C ▪ 120Hz (mΩ)	Max. ESR +20°C ▪ 120Hz (mΩ)	I_R ▪ Max. Ripple Current +85°C ▪ 120Hz (mA rms)	CapXon Part Number
10	10000	22	25	36	46	2510	LD103M010M250A □□
	12000	22	25	34	44	2710	LD123M010M250A □□
	15000	22	30	27	35	3210	LD153M010M300A □□
	15000	25	25	27	35	3210	LD153M010N250A □□
	18000	22	35	23	29	3610	LD183M010M350A □□
	18000	25	30	23	29	3610	LD183M010N300A □□
	22000	22	40	19	24	4110	LD223M010M400A □□
	22000	25	35	19	24	4110	LD223M010N350A □□
	22000	30	25	19	24	4110	LD223M010O250A □□
	33000	22	45	15	20	4810	LD333M010M450A □□
	33000	25	40	15	20	5210	LD333M010N400A □□
	33000	30	30	15	20	5210	LD333M010O300A □□
	47000	22	50	11	14	6010	LD473M010M500A □□
	47000	25	45	11	14	6310	LD473M010N450A □□
	47000	30	35	11	14	6310	LD473M010O350A □□
	56000	30	40	9	12	7210	LD563M010O400A □□
	56000	35	35	9	12	7510	LD563M010P350A □□
	68000	30	50	8	10	8210	LD683M010O500A □□
	68000	35	40	8	10	8210	LD683M010P400A □□
	82000	35	50	6	8	9310	LD823M010P500A □□
	100000	35	55	5	7	10110	LD104M010P550A □□
16	8200	22	25	44	57	2210	LD822M016M250A □□
	10000	22	30	36	46	2610	LD103M016M300A □□
	10000	25	25	36	46	2610	LD103M016N250A □□
	12000	22	35	34	44	2910	LD123M016M350A □□
	15000	22	40	27	35	3310	LD153M016M400A □□
	15000	25	30	27	35	3310	LD153M016N300A □□
	15000	30	25	27	35	3410	LD153M016O250A □□
	18000	22	45	23	29	3810	LD183M016M450A □□
	18000	25	35	23	29	3710	LD183M016N350A □□
	22000	22	50	19	24	4210	LD223M016M500A □□
	22000	25	40	19	24	4210	LD223M016N400A □□
	22000	30	30	19	24	4210	LD223M016O300A □□
	22000	35	25	19	24	4410	LD223M016P250A □□
	33000	25	45	12	16	5210	LD333M016N450A □□
	33000	30	35	12	16	5210	LD333M016O350A □□
	33000	35	30	12	16	5210	LD333M016P300A □□
	47000	25	50	9	11	6310	LD473M016N500A □□
	47000	30	40	9	11	6310	LD473M016O400A □□
	47000	35	35	9	11	6310	LD473M016P350A □□
	56000	30	45	7	10	9810	LD563M016O450A □□
	56000	35	40	7	10	9810	LD563M016P400A □□
	56000	40	40	7	10	9810	LD563M016Q400A □□
	68000	35	50	6	8	10810	LD683M016P500A □□

□□: See description at end of standard ratings

For further information please contact sales@capxon.org

STANDARD RATINGS

V_R (V)	C_R (µF)	ø D (mm)	L (mm)	Typ. ESR +20°C ▪ 120Hz (mΩ)	Max. ESR +20°C ▪ 120Hz (mΩ)	I_R ▪ Max. Ripple Current +85°C ▪ 120Hz (mA rms)	CapXon Part Number
16	68000	40	50	6	8	11510	LD683M016Q500A □□
	82000	35	60	5	7	11810	LD823M016P600A □□
	82000	40	50	5	7	11810	LD823M016Q500A □□
	100000	35	80	4	6	13210	LD104M016P800A □□
	100000	40	60	4	6	13510	LD104M016Q600A □□
25	5600	22	25	55	71	2010	LD562M025M250A □□
	6800	22	30	45	59	2310	LD682M025M300A □□
	6800	25	25	45	59	2310	LD682M025N250A □□
	8200	22	35	37	49	2610	LD822M025M350A □□
	10000	22	40	31	40	2910	LD103M025M400A □□
	10000	25	30	31	40	2810	LD103M025N300A □□
	10000	30	25	31	40	3010	LD103M025O250A □□
	12000	22	45	30	39	3310	LD123M025M450A □□
	12000	25	35	30	39	3210	LD123M025N350A □□
	12000	30	30	30	39	3410	LD123M025O300A □□
	15000	25	40	24	31	3710	LD153M025N400A □□
	15000	35	25	24	31	3910	LD153M025P250A □□
	18000	25	50	20	26	4310	LD183M025N500A □□
	18000	30	35	20	26	4210	LD183M025O350A □□
	18000	35	30	20	26	4410	LD183M025P300A □□
	22000	30	40	16	21	5010	LD223M025O400A □□
	22000	35	35	16	21	5010	LD223M025P350A □□
	33000	35	40	11	14	8110	LD333M025P400A □□
	33000	40	40	11	14	8710	LD333M025Q400A □□
	39000	35	45	9	12	9010	LD393M025P450A □□
	39000	40	40	9	12	9610	LD393M025Q400A □□
	47000	35	50	8	10	9610	LD473M025P500A □□
	56000	35	60	6	8	10310	LD563M025P600A □□
	56000	40	50	6	8	10810	LD563M025Q500A □□
	68000	35	80	5	7	11310	LD683M025P800A □□
	68000	40	60	5	7	11810	LD683M025Q600A □□
	82000	40	80	4	6	13510	LD823M025Q800A □□
35	3300	22	25	77	100	1810	LD332M035M250A □□
	3900	22	30	65	85	2110	LD392M035M300A □□
	4700	25	25	54	71	2210	LD472M035N250A □□
	5600	22	35	46	59	2310	LD562M035M350A □□
	5600	25	30	46	59	2310	LD562M035N300A □□
	6800	22	40	38	49	2910	LD682M035M400A □□
	6800	25	35	38	49	2910	LD682M035N350A □□
	6800	30	25	38	49	2910	LD682M035O250A □□
	8200	22	50	31	40	2810	LD822M035M500A □□
	8200	25	40	31	40	2810	LD822M035N400A □□
	8200	30	30	31	40	2810	LD822M035O300A □□
	8200	35	25	31	40	2910	LD822M035P250A □□

□□: See description at end of standard ratings

For further information please contact sales@capxon.org

STANDARD RATINGS

V_R (V)	C_R (µF)	ø D (mm)	L (mm)	Typ. ESR +20°C ▪ 120Hz (mΩ)	Max. ESR +20°C ▪ 120Hz (mΩ)	I_R ▪ Max. Ripple Current +85°C ▪ 120Hz (mA rms)	CapXon Part Number
35	10000	25	45	26	33	3110	LD103M035N450A□□
	10000	30	35	26	33	3210	LD103M035O350A□□
	12000	25	50	26	33	3510	LD123M035N500A□□
	12000	30	40	26	33	3510	LD123M035O400A□□
	12000	35	30	26	33	3610	LD123M035P300A□□
	15000	30	45	20	27	4110	LD153M035O450A□□
	15000	35	35	20	27	4110	LD153M035P350A□□
	18000	30	50	17	22	4610	LD183M035O500A□□
	18000	35	40	17	22	4710	LD183M035P400A□□
	22000	35	45	14	18	5310	LD223M035P450A□□
	27000	35	45	13	17	8210	LD273M035P450A□□
	27000	40	40	13	17	8210	LD273M035Q400A□□
	33000	35	50	11	14	8710	LD333M035P500A□□
	39000	35	60	9	12	10310	LD393M035P600A□□
	39000	40	50	9	12	10310	LD393M035Q500A□□
	47000	35	80	8	10	11410	LD473M035P800A□□
	47000	40	60	8	10	10810	LD473M035Q600A□□
	56000	40	70	6	8	12110	LD563M035Q700A□□
	68000	40	80	5	7	14210	LD683M035Q800A□□
50	2200	22	25	92	120	1710	LD222M050M250A□□
	2700	22	30	76	98	1910	LD272M050M300A□□
	2700	25	25	76	98	1910	LD272M050N250A□□
	3300	25	30	62	80	1810	LD332M050N300A□□
	3900	22	35	52	68	2110	LD392M050M350A□□
	3900	25	30	52	68	2110	LD392M050N300A□□
	3900	30	25	52	68	2410	LD392M050O250A□□
	4700	22	40	43	56	2410	LD472M050M400A□□
	4700	25	35	43	56	2410	LD472M050N350A□□
	5600	22	50	36	47	2510	LD562M050M500A□□
	5600	25	40	36	47	2510	LD562M050N400A□□
	5600	30	30	36	47	2510	LD562M050O300A□□
	5600	35	25	36	47	2610	LD562M050P250A□□
	6800	25	45	30	39	3210	LD682M050N450A□□
	6800	30	35	30	39	3210	LD682M050O350A□□
	8200	25	50	25	32	3010	LD822M050N500A□□
	8200	30	40	25	32	3010	LD822M050O400A□□
	8200	35	30	25	32	3010	LD822M050P300A□□
	10000	30	45	20	27	3410	LD103M050O450A□□
	10000	35	35	20	27	3410	LD103M050P350A□□
	12000	30	45	26	33	3810	LD123M050O450A□□
	12000	35	35	26	33	3810	LD123M050P350A□□
	15000	30	50	20	27	4510	LD153M050O500A□□
	15000	35	40	20	27	7710	LD153M050P400A□□
	15000	40	40	20	27	8110	LD153M050Q400A□□

□□: See description at end of standard ratings

For further information please contact sales@capxon.org

STANDARD RATINGS

V_R (V)	C_R (µF)	ø D (mm)	L (mm)	Typ. ESR +20°C ▪ 120Hz (mΩ)	Max. ESR +20°C ▪ 120Hz (mΩ)	I_R ▪ Max. Ripple Current +85°C ▪ 120Hz (mA rms)	CapXon Part Number
50	18000	35	45	17	22	8310	LD183M050P450A □□
	18000	40	40	17	22	8310	LD183M050Q400A □□
	22000	35	50	14	18	9110	LD223M050P500A □□
	22000	40	50	14	18	9410	LD223M050Q500A □□
	27000	35	80	11	15	11210	LD273M050P800A □□
	27000	40	60	11	15	10810	LD273M050Q600A □□
	33000	35	80	9	12	13410	LD333M050P800A □□
	33000	40	70	9	12	13410	LD333M050Q700A □□
	39000	40	80	8	10	15510	LD393M050Q800A □□
63	1500	22	25	140	180	1610	LD152M063M250A □□
	1800	22	25	120	150	1810	LD182M063M250A □□
	2200	22	30	92	120	2010	LD222M063M300A □□
	2200	25	25	92	120	2010	LD222M063N250A □□
	2700	22	35	76	98	2210	LD272M063M350A □□
	2700	25	30	76	98	2310	LD272M063N300A □□
	3300	22	40	62	80	2310	LD332M063M400A □□
	3300	25	35	62	80	2310	LD332M063N350A □□
	3300	30	25	62	80	2310	LD332M063O250A □□
	3900	22	45	52	68	2510	LD392M063M450A □□
	3900	25	40	52	68	2610	LD392M063N400A □□
	3900	30	30	52	68	2610	LD392M063O300A □□
	3900	35	25	52	68	2710	LD392M063P250A □□
	4700	30	30	43	56	2910	LD472M063O300A □□
	5600	25	45	36	47	3110	LD562M063N450A □□
	5600	30	35	36	47	3210	LD562M063O350A □□
	5600	35	30	36	47	3310	LD562M063P300A □□
	6800	30	40	30	39	3610	LD682M063O400A □□
	6800	35	35	30	39	3710	LD682M063P350A □□
	8200	30	50	25	32	4710	LD822M063O500A □□
	8200	35	40	25	32	4810	LD822M063P400A □□
	10000	35	45	20	27	5310	LD103M063P450A □□
	12000	35	50	21	28	7810	LD123M063P500A □□
	12000	40	40	21	28	8610	LD123M063Q400A □□
	15000	35	70	17	22	10210	LD153M063P700A □□
	15000	40	50	17	22	9510	LD153M063Q500A □□
	18000	35	80	14	18	11210	LD183M063P800A □□
	18000	40	60	14	18	10710	LD183M063Q600A □□
	27000	40	80	9	12	12710	LD273M063Q800A □□
80	1000	22	25	150	200	1310	LD102M080M250A □□
	1200	22	30	130	170	1510	LD122M080M300A □□
	1500	25	25	100	130	1710	LD152M080N250A □□
	1800	22	35	85	110	1910	LD182M080M350A □□
	1800	25	30	85	110	1910	LD182M080N300A □□

□□: See description at end of standard ratings

For further information please contact sales@capxon.org

STANDARD RATINGS

V_R (V)	C_R (µF)	ø D (mm)	L (mm)	Typ. ESR +20°C ▪ 120Hz (mΩ)	Max. ESR +20°C ▪ 120Hz (mΩ)	I_R ▪ Max. Ripple Current +85°C ▪ 120Hz (mA rms)	CapXon Part Number
80	2200	22	40	70	90	2110	LD222M080M400A□□
	2200	25	35	70	90	2210	LD222M080N350A□□
	2200	30	25	70	90	2210	LD222M080O250A□□
	2700	22	50	57	74	2510	LD272M080M500A□□
	2700	25	40	57	74	2510	LD272M080N400A□□
	2700	30	30	57	74	2510	LD272M080O300A□□
	2700	35	25	57	74	2510	LD272M080P250A□□
	3300	25	45	46	60	2810	LD332M080N450A□□
	3300	30	35	46	60	2810	LD332M080O350A□□
	3900	25	50	39	51	3110	LD392M080N500A□□
	3900	30	40	39	51	3210	LD392M080O400A□□
	3900	35	30	39	51	3210	LD392M080P300A□□
	4700	30	45	33	42	3610	LD472M080O450A□□
	4700	35	35	33	42	3610	LD472M080P350A□□
	5600	30	50	27	36	3810	LD562M080O500A□□
	5600	35	40	27	36	3810	LD562M080P400A□□
	6800	35	50	23	29	4110	LD682M080P500A□□
	8200	35	50	19	24	6910	LD822M080P500A□□
	10000	35	60	15	20	8710	LD103M080P600A□□
	12000	35	70	13	17	9710	LD123M080P700A□□
	12000	40	50	13	17	9010	LD123M080Q500A□□
	15000	35	80	10	13	10510	LD153M080P800A□□
	15000	40	60	10	13	10210	LD153M080Q600A□□
	18000	40	80	9	11	12310	LD183M080Q800A□□
100	680	22	25	220	290	1110	LD681M100M250A□□
	820	22	30	180	240	1210	LD821M100M300A□□
	1000	25	25	150	200	1410	LD102M100N250A□□
	1200	22	35	130	170	1610	LD122M100M350A□□
	1200	25	30	130	170	1610	LD122M100N300A□□
	1500	22	40	100	130	1810	LD152M100M400A□□
	1500	25	35	100	130	1810	LD152M100N350A□□
	1500	30	25	100	130	1810	LD152M100O250A□□
	1800	22	50	85	110	2110	LD182M100M500A□□
	1800	25	40	85	110	2010	LD182M100N400A□□
	1800	30	30	85	110	2110	LD182M100O300A□□
	1800	35	25	85	110	2210	LD182M100P250A□□
	2200	25	45	70	90	2210	LD222M100N450A□□
	2200	30	35	70	90	2310	LD222M100O350A□□
	2200	35	30	70	90	2510	LD222M100P300A□□
	2700	25	50	57	74	2610	LD272M100N500A□□
	2700	30	40	57	74	2710	LD272M100O400A□□
	3300	30	45	46	60	3010	LD332M100O450A□□
	3300	35	35	46	60	3110	LD332M100P350A□□
	3900	30	45	39	51	3410	LD392M100O450A□□

□□: See description at end of standard ratings

For further information please contact sales@capxon.org

STANDARD RATINGS

V_R (V)	C_R (µF)	ø D (mm)	L (mm)	Typ. ESR +20°C ▪ 120Hz (mΩ)	Max. ESR +20°C ▪ 120Hz (mΩ)	I_R ▪ Max. Ripple Current +85°C ▪ 120Hz (mA rms)	CapXon Part Number
100	3900	35	35	39	51	3410	LD392M100P350A □□
	4700	35	40	33	42	4010	LD472M100P400A □□
	5600	35	45	27	36	7010	LD562M100P450A □□
	5600	40	40	27	36	7410	LD562M100Q400A □□
	6800	35	50	23	29	8010	LD682M100P500A □□
	6800	40	50	23	29	8910	LD682M100Q500A □□
	8200	35	70	19	24	9610	LD822M100P700A □□
	8200	40	60	19	24	9610	LD822M100Q600A □□
	10000	35	80	15	20	10410	LD103M100P800A □□
	10000	40	60	15	20	10210	LD103M100Q600A □□
	12000	40	80	13	17	12310	LD123M100Q800A □□
160	220	22	20	500	900	1010	LD221M160M200A □□
	270	22	25	410	740	1110	LD271M160M250A □□
	330	22	25	330	600	1510	LD331M160M250A □□
	390	22	30	280	510	1510	LD391M160M300A □□
	390	25	25	280	510	1610	LD391M160N250A □□
	470	22	35	230	420	1810	LD471M160M350A □□
	470	25	25	230	420	1710	LD471M160N250A □□
	560	22	35	200	360	2110	LD561M160M350A □□
	560	25	30	200	360	2210	LD561M160N300A □□
	560	30	25	200	360	2110	LD561M160O250A □□
	680	22	40	160	290	2310	LD681M160M400A □□
	680	25	35	160	290	2310	LD681M160N350A □□
	820	22	50	130	240	2710	LD821M160M500A □□
	820	25	40	130	240	2710	LD821M160N400A □□
	820	30	30	130	240	2710	LD821M160O300A □□
	820	35	25	130	240	2710	LD821M160P250A □□
	1000	25	45	110	200	3310	LD102M160N450A □□
	1000	30	35	110	200	3410	LD102M160O350A □□
	1000	35	30	110	200	3410	LD102M160P300A □□
	1200	25	50	94	170	3710	LD122M160N500A □□
	1200	30	40	94	170	3810	LD122M160O400A □□
	1200	35	35	94	170	3810	LD122M160P350A □□
	1500	30	45	72	130	4410	LD152M160O450A □□
	1500	35	40	72	130	4410	LD152M160P400A □□
	1800	35	40	61	110	4410	LD182M160P400A □□
	2200	35	45	50	90	4910	LD222M160P450A □□
	2700	35	50	41	74	5310	LD272M160P500A □□
	3300	35	70	33	60	5510	LD332M160P700A □□
	3300	40	60	33	60	5510	LD332M160Q600A □□
	3900	35	80	28	51	5910	LD392M160P800A □□
	4700	40	80	24	42	7310	LD472M160Q800A □□
180	270	22	25	410	740	1210	LD271M180M250A □□
	330	22	30	330	600	1510	LD331M180M300A □□

□□: See description at end of standard ratings

For further information please contact sales@capxon.org

STANDARD RATINGS

V_R (V)	C_R (µF)	ø D (mm)	L (mm)	Typ. ESR +20°C ▪ 120Hz (mΩ)	Max. ESR +20°C ▪ 120Hz (mΩ)	I_R ▪ Max. Ripple Current +85°C ▪ 120Hz (mA rms)	CapXon Part Number
180	390	25	25	280	510	1680	LD391M180N250A □□
	470	22	35	230	420	1710	LD471M180M350A □□
	470	25	30	230	420	1710	LD471M180N300A □□
	470	30	25	230	420	1810	LD471M180O250A □□
	560	22	40	200	360	2120	LD561M180M400A □□
	560	25	35	200	360	2120	LD561M180N350A □□
	680	22	50	160	290	2410	LD681M180M500A □□
	680	25	40	160	290	2410	LD681M180N400A □□
	680	30	30	160	290	2410	LD681M180O300A □□
	680	35	25	160	290	2410	LD681M180P250A □□
	820	25	45	130	240	2710	LD821M180N450A □□
	820	30	35	130	240	2710	LD821M180O350A □□
	820	35	30	130	240	2710	LD821M180P300A □□
	1000	25	50	110	200	3510	LD102M180N500A □□
	1000	30	40	110	200	3510	LD102M180O400A □□
	1200	30	45	94	170	3920	LD122M180O450A □□
	1200	35	35	94	170	3920	LD122M180P350A □□
	1500	35	45	72	130	4610	LD152M180P450A □□
	1800	35	50	61	110	4110	LD182M180P500A □□
200	220	22	25	500	900	1210	LD221M200M250A □□
	270	22	25	410	740	1320	LD271M200M250A □□
	330	22	25	330	600	1540	LD331M200M250A □□
	330	22	30	330	600	1610	LD331M200M300A □□
	330	25	25	330	600	1640	LD331M200N250A □□
	390	22	30	280	510	1750	LD391M200M300A □□
	390	25	25	280	510	1680	LD391M200N250A □□
	390	25	30	280	510	1870	LD391M200N300A □□
	390	30	25	280	510	2060	LD391M200O250A □□
	470	22	30	230	420	1950	LD471M200M300A □□
	470	22	35	230	420	2000	LD471M200M350A □□
	470	25	25	230	420	1950	LD471M200N250A □□
	470	25	30	230	420	2050	LD471M200N300A □□
	470	30	25	230	420	2280	LD471M200O250A □□
	560	22	35	200	360	2250	LD561M200M350A □□
	560	22	40	200	360	2320	LD561M200M400A □□
	560	25	30	200	360	2240	LD561M200N300A □□
	560	25	35	200	360	2340	LD561M200N350A □□
	560	30	25	200	360	2340	LD561M200O250A □□
	560	30	30	200	360	2590	LD561M200O300A □□
	560	35	25	200	360	2580	LD561M200P250A □□
	680	22	40	160	290	2600	LD681M200M400A □□
	680	22	45	160	290	2570	LD681M200M450A □□
	680	25	35	160	290	2490	LD681M200N350A □□
	680	25	40	160	290	2680	LD681M200N400A □□

□□: See description at end of standard ratings

For further information please contact sales@capxon.org

STANDARD RATINGS

V_R (V)	C_R (µF)	ø D (mm)	L (mm)	Typ. ESR +20°C ▪ 120Hz (mΩ)	Max. ESR +20°C ▪ 120Hz (mΩ)	I_R ▪ Max. Ripple Current +85°C ▪ 120Hz (mA rms)	CapXon Part Number
200	680	30	25	160	290	2420	LD681M200O250A □□
	680	30	30	160	290	2870	LD681M200O300A □□
	680	35	25	160	290	2900	LD681M200P250A □□
	820	22	45	130	240	2990	LD821M200M450A □□
	820	25	35	130	240	2760	LD821M200N350A □□
	820	25	40	130	240	2990	LD821M200N400A □□
	820	25	45	130	240	3060	LD821M200N450A □□
	820	30	30	130	240	2990	LD821M200O300A □□
	820	30	35	130	240	3280	LD821M200O350A □□
	820	35	25	130	240	3060	LD821M200P250A □□
	820	35	30	130	240	3300	LD821M200P300A □□
	1000	25	45	110	200	3630	LD102M200N450A □□
	1000	25	50	110	200	3800	LD102M200N500A □□
	1000	30	30	110	200	3510	LD102M200O300A □□
	1000	30	35	110	200	3630	LD102M200O350A □□
	1000	30	40	110	200	4000	LD102M200O400A □□
	1000	35	25	110	200	3510	LD102M200P250A □□
	1000	35	30	110	200	4100	LD102M200P300A □□
	1200	25	50	94	170	4030	LD122M200N500A □□
	1200	30	45	94	170	4530	LD122M200O450A □□
	1200	35	35	94	170	4530	LD122M200P350A □□
	1500	30	50	72	130	5260	LD152M200O500A □□
	1500	35	35	72	130	4800	LD152M200P350A □□
	1500	35	40	72	130	5260	LD152M200P400A □□
	1800	30	50	61	110	5310	LD182M200O500A □□
	1800	30	55	61	110	5670	LD182M200O550A □□
	1800	35	40	61	110	5310	LD182M200P400A □□
	1800	35	45	61	110	5770	LD182M200P450A □□
	2200	35	45	50	90	5810	LD222M200P450A □□
	2200	35	50	50	90	5910	LD222M200P500A □□
	2700	35	55	41	74	6030	LD272M200P550A □□
	2700	35	60	41	74	6190	LD272M200P600A □□
	2700	40	50	41	74	6190	LD272M200Q500A □□
	3300	35	80	33	60	7500	LD332M200P800A □□
	3300	40	60	33	60	7500	LD332M200Q600A □□
	3900	40	80	28	51	8000	LD392M200Q800A □□
250	100	22	25	1110	1990	730	LD101M250M250A □□
	150	22	25	740	1330	930	LD151M250M250A □□
	180	22	25	620	1110	1120	LD181M250M250A □□
	220	22	30	500	900	1290	LD221M250M300A □□
	220	25	25	500	900	1290	LD221M250N250A □□
	270	22	30	410	740	1470	LD271M250M300A □□
	270	25	25	410	740	1540	LD271M250N250A □□
	330	22	30	330	600	1670	LD331M250M300A □□

□□: See description at end of standard ratings

For further information please contact sales@capxon.org

STANDARD RATINGS

V_R (V)	C_R (µF)	ø D (mm)	L (mm)	Typ. ESR +20°C ▪ 120Hz (mΩ)	Max. ESR +20°C ▪ 120Hz (mΩ)	I_R ▪ Max. Ripple Current +85°C ▪ 120Hz (mA rms)	CapXon Part Number
250	330	22	35	330	600	1700	LD331M250M350A □□
	330	25	25	330	600	1630	LD331M250N250A □□
	330	25	30	330	600	1790	LD331M250N300A □□
	390	22	35	280	510	1910	LD391M250M350A □□
	390	22	40	280	510	1940	LD391M250M400A □□
	390	25	30	280	510	1860	LD391M250N300A □□
	390	25	35	280	510	2020	LD391M250N350A □□
	390	30	25	280	510	2150	LD391M250O250A □□
	470	22	40	230	420	2190	LD471M250M400A □□
	470	22	45	230	420	2220	LD471M250M450A □□
	470	25	30	230	420	2060	LD471M250N300A □□
	470	25	35	230	420	2230	LD471M250N350A □□
	470	30	30	230	420	2450	LD471M250O300A □□
	560	22	40	200	360	2460	LD561M250M400A □□
	560	22	50	200	360	2540	LD561M250M500A □□
	560	25	35	200	360	2460	LD561M250N350A □□
	560	25	40	200	360	2530	LD561M250N400A □□
	560	30	30	200	360	2700	LD561M250O300A □□
	560	35	25	200	360	2730	LD561M250P250A □□
	680	22	50	160	290	2900	LD681M250M500A □□
	680	25	40	160	290	2720	LD681M250N400A □□
	680	25	45	160	290	2900	LD681M250N450A □□
	680	30	35	160	290	3090	LD681M250O350A □□
	680	35	25	160	290	2900	LD681M250P250A □□
	680	35	30	160	290	3350	LD681M250P300A □□
	820	25	45	130	240	3280	LD821M250N450A □□
	820	25	50	130	240	3360	LD821M250N500A □□
	820	25	55	130	240	3480	LD821M250N550A □□
	820	30	35	130	240	3300	LD821M250O350A □□
	820	30	40	130	240	3390	LD821M250O400A □□
	820	35	30	130	240	3440	LD821M250P300A □□
	820	35	35	130	240	3810	LD821M250P350A □□
	1000	25	50	110	200	3800	LD102M250N500A □□
	1000	30	40	110	200	4000	LD102M250O400A □□
	1000	30	45	110	200	4290	LD102M250O450A □□
	1000	35	30	110	200	4100	LD102M250P300A □□
	1000	35	35	110	200	4290	LD102M250P350A □□
	1000	35	40	110	200	4380	LD102M250P400A □□
	1200	30	45	94	170	4620	LD122M250O450A □□
	1200	30	50	94	170	4740	LD122M250O500A □□
	1200	35	35	94	170	4620	LD122M250P350A □□
	1200	35	40	94	170	4760	LD122M250P400A □□
	1500	35	40	72	130	5380	LD152M250P400A □□
	1500	35	45	72	130	5480	LD152M250P450A □□

□□: See description at end of standard ratings

For further information please contact sales@capxon.org

STANDARD RATINGS

V_R (V)	C_R (µF)	ø D (mm)	L (mm)	Typ. ESR +20°C ▪ 120Hz (mΩ)	Max. ESR +20°C ▪ 120Hz (mΩ)	I_R ▪ Max. Ripple Current +85°C ▪ 120Hz (mA rms)	CapXon Part Number
250	1800	35	45	61	110	5780	LD182M250P450A □□
	1800	35	55	61	110	6350	LD182M250P550A □□
	2200	35	55	50	90	6450	LD222M250P550A □□
	2200	35	65	50	90	6800	LD222M250P650A □□
315	100	22	25	1110	1990	730	LD101M315M250A □□
	120	22	30	920	1660	760	LD121M315M300A □□
	150	22	30	740	1330	940	LD151M315M300A □□
	150	25	25	740	1330	940	LD151M315N250A □□
	180	22	35	620	1110	1120	LD181M315M350A □□
	180	25	30	620	1110	1120	LD181M315N300A □□
	220	22	40	500	900	1320	LD221M315M400A □□
	220	25	35	500	900	1320	LD221M315N350A □□
	220	30	25	500	900	1320	LD221M315O250A □□
	270	22	45	410	740	1610	LD271M315M450A □□
	270	25	40	410	740	1610	LD271M315N400A □□
	270	30	30	410	740	1610	LD271M315O300A □□
	270	35	25	410	740	1610	LD271M315P250A □□
	330	25	45	330	600	1760	LD331M315N450A □□
	330	30	35	330	600	1760	LD331M315O350A □□
	390	25	50	280	510	2210	LD391M315N500A □□
	390	30	40	280	510	2210	LD391M315O400A □□
	390	35	30	280	510	2210	LD391M315P300A □□
	470	30	45	230	420	2450	LD471M315O450A □□
	470	35	35	230	420	2450	LD471M315P350A □□
	560	30	50	200	360	2850	LD561M315O500A □□
	560	35	40	200	360	2850	LD561M315P400A □□
	680	35	45	160	290	2310	LD681M315P450A □□
350	82	22	25	1350	2430	650	LD820M350M250A □□
	100	22	25	1110	1990	730	LD101M350M250A □□
	120	22	30	920	1660	830	LD121M350M300A □□
	120	25	25	920	1660	830	LD121M350N250A □□
	150	22	35	740	1330	950	LD151M350M350A □□
	150	25	30	740	1330	950	LD151M350N300A □□
	180	22	40	620	1110	1120	LD181M350M400A □□
	180	30	25	620	1110	1120	LD181M350O250A □□
	220	22	45	500	900	1420	LD221M350M450A □□
	220	25	35	500	900	1420	LD221M350N350A □□
	220	30	30	500	900	1420	LD221M350O300A □□
	220	35	25	500	900	1510	LD221M350P250A □□
	270	25	40	410	740	1720	LD271M350N400A □□
	270	30	35	410	740	1720	LD271M350O350A □□
	330	25	45	330	600	1830	LD331M350N450A □□
	330	30	40	330	600	1830	LD331M350O400A □□
	330	35	30	330	600	1830	LD331M350P300A □□

□□: See description at end of standard ratings

For further information please contact sales@capxon.org

STANDARD RATINGS

V_R (V)	C_R (µF)	ø D (mm)	L (mm)	Typ. ESR +20°C ▪ 120Hz (mΩ)	Max. ESR +20°C ▪ 120Hz (mΩ)	I_R ▪ Max. Ripple Current +85°C ▪ 120Hz (mA rms)	CapXon Part Number
350	390	30	40	280	510	2340	LD391M350O400A □□
	390	35	35	280	510	2340	LD391M350P350A □□
	470	30	45	230	420	2490	LD471M350O450A □□
	470	35	40	230	420	2490	LD471M350P400A □□
	560	35	45	200	360	3220	LD561M350P450A □□
	680	35	45	160	290	3700	LD681M350P450A □□
	820	35	50	130	240	4500	LD821M350P500A □□
	1000	35	55	110	200	5200	LD102M350P550A □□
	1200	35	60	94	170	5500	LD122M350P600A □□
	1200	40	50	94	170	5600	LD122M350Q500A □□
	1500	40	60	72	130	8500	LD152M350Q600A □□
	1800	40	70	61	110	7900	LD182M350Q700A □□
	2200	40	80	50	90	8700	LD222M350Q800A □□
400	68	22	25	1630	2930	630	LD680M400M250A □□
	82	22	25	1350	2430	790	LD820M400M250A □□
	100	22	25	1110	1990	870	LD101M400M250A □□
	100	22	30	1110	1990	910	LD101M400M300A □□
	100	25	25	1110	1990	1050	LD101M400N250A □□
	120	22	30	920	1660	990	LD121M400M300A □□
	120	22	35	920	1660	1100	LD121M400M350A □□
	120	25	25	920	1660	1100	LD121M400N250A □□
	120	25	30	920	1660	1200	LD121M400N300A □□
	150	22	30	740	1330	1150	LD151M400M300A □□
	150	22	35	740	1330	1190	LD151M400M350A □□
	150	25	25	740	1330	1150	LD151M400N250A □□
	150	25	30	740	1330	1220	LD151M400N300A □□
	150	30	25	740	1330	1240	LD151M400O250A □□
	180	22	35	620	1110	1310	LD181M400M350A □□
	180	22	40	620	1110	1370	LD181M400M400A □□
	180	25	30	620	1110	1300	LD181M400N300A □□
	180	25	35	620	1110	1460	LD181M400N350A □□
	180	30	30	620	1110	1460	LD181M400O300A □□
	220	22	40	500	900	1530	LD221M400M400A □□
	220	22	50	500	900	1760	LD221M400M500A □□
	220	25	35	500	900	1500	LD221M400N350A □□
	220	25	40	500	900	1760	LD221M400N400A □□
	220	30	25	500	900	1530	LD221M400O250A □□
	220	30	30	500	900	1780	LD221M400O300A □□
	220	35	25	500	900	1810	LD221M400P250A □□
	220	35	30	500	900	1860	LD221M400P300A □□
	270	22	45	410	740	1790	LD271M400M450A □□
	270	25	40	410	740	1830	LD271M400N400A □□
	270	25	45	410	740	1970	LD271M400N450A □□
	270	30	30	410	740	1890	LD271M400O300A □□

□□: See description at end of standard ratings

For further information please contact sales@capxon.org

STANDARD RATINGS

V_R (V)	C_R (µF)	ø D (mm)	L (mm)	Typ. ESR +20°C ▪ 120Hz (mΩ)	Max. ESR +20°C ▪ 120Hz (mΩ)	I_R ▪ Max. Ripple Current +85°C ▪ 120Hz (mA rms)	CapXon Part Number
400	270	30	35	410	740	2040	LD271M400O350A □□
	270	35	25	410	740	2170	LD271M400P250A □□
	270	35	30	410	740	2040	LD271M400P300A □□
	330	25	45	330	600	2030	LD331M400N450A □□
	330	25	50	330	600	2200	LD331M400N500A □□
	330	30	35	330	600	2150	LD331M400O350A □□
	330	30	40	330	600	2470	LD331M400O400A □□
	330	35	30	330	600	2370	LD331M400P300A □□
	390	25	50	280	510	2330	LD391M400N500A □□
	390	30	35	280	510	2350	LD391M400O350A □□
	390	30	45	280	510	2590	LD391M400O450A □□
	390	35	30	280	510	2320	LD391M400P300A □□
	390	35	35	280	510	2550	LD391M400P350A □□
	470	25	55	230	420	2660	LD471M400N550A □□
	470	30	40	230	420	2610	LD471M400O400A □□
	470	30	50	230	420	2750	LD471M400O500A □□
	470	35	35	230	420	2580	LD471M400P350A □□
	470	35	40	230	420	2790	LD471M400P400A □□
	560	30	55	200	360	3360	LD561M400O550A □□
	560	35	35	200	360	3150	LD561M400P350A □□
	560	35	45	200	360	3430	LD561M400P450A □□
	560	40	40	200	360	3480	LD561M400Q400A □□
	680	30	55	160	290	3500	LD681M400O550A □□
	680	35	40	160	290	3850	LD681M400P400A □□
	680	35	50	160	290	3930	LD681M400P500A □□
	680	35	55	160	290	4160	LD681M400P550A □□
	680	40	50	160	290	4380	LD681M400Q500A □□
	820	35	50	130	240	4500	LD821M400P500A □□
	820	35	55	130	240	4600	LD821M400P550A □□
	820	40	50	130	240	4600	LD821M400Q500A □□
	1000	35	65	110	200	5200	LD102M400P650A □□
	1000	40	60	110	200	5300	LD102M400Q600A □□
	1000	45	50	110	200	5300	LD102M400V500A □□
	1200	35	70	94	170	5900	LD122M400P700A □□
	1200	40	60	94	170	5900	LD122M400Q600A □□
	1500	40	70	72	130	6700	LD152M400Q700A □□
	1800	45	80	61	110	7400	LD182M400V800A □□
420	100	22	30	1470	2650	1080	LD101M420M300A □□
	100	25	25	1470	2650	1080	LD101M420N250A □□
	120	25	30	1230	2210	1230	LD121M420N300A □□
	150	22	40	980	1770	1190	LD151M420M400A □□
	150	25	35	980	1770	1240	LD151M420N350A □□
	180	25	35	820	1470	1460	LD181M420N350A □□
	180	30	30	820	1470	1460	LD181M420O300A □□

□□: See description at end of standard ratings

For further information please contact sales@capxon.org

STANDARD RATINGS

V_R (V)	C_R (µF)	ø D (mm)	L (mm)	Typ. ESR +20°C ▪ 120Hz (mΩ)	Max. ESR +20°C ▪ 120Hz (mΩ)	I_R ▪ Max. Ripple Current +85°C ▪ 120Hz (mA rms)	CapXon Part Number
420	220	25	40	670	1210	1820	LD221M420N400A□□
	220	30	35	670	1210	1870	LD221M420O350A□□
	270	25	55	540	980	2070	LD271M420N550A□□
	270	30	35	540	980	2070	LD271M420O350A□□
	270	35	30	540	980	2070	LD271M420P300A□□
	330	30	45	440	800	2400	LD331M420O450A□□
	330	35	35	440	800	2400	LD331M420P350A□□
	390	30	50	380	680	2660	LD391M420O500A□□
	470	30	55	310	560	2840	LD471M420O550A□□
	470	35	45	310	560	2890	LD471M420P450A□□
	560	35	50	260	470	3450	LD561M420P500A□□
	680	35	60	220	390	4010	LD681M420P600A□□
	820	35	65	180	320	4610	LD821M420P650A□□
	1000	35	80	150	270	5610	LD102M420P800A□□
	1500	40	80	100	180	7210	LD152M420Q800A□□
	1800	45	80	83	150	7810	LD182M420V800A□□
450	47	22	25	3130	5640	530	LD470M450M250A□□
	56	22	25	2630	4740	610	LD560M450M250A□□
	68	22	30	2170	3900	690	LD680M450M300A□□
	68	25	25	2170	3900	720	LD680M450N250A□□
	82	25	25	1790	3230	820	LD820M450N250A□□
	82	25	30	1790	3230	930	LD820M450N300A□□
	100	22	35	1470	2650	1100	LD101M450M350A□□
	100	25	30	1470	2650	1120	LD101M450N300A□□
	100	30	25	1470	2650	1130	LD101M450O250A□□
	120	22	40	1230	2210	1240	LD121M450M400A□□
	120	25	30	1230	2210	1240	LD121M450N300A□□
	120	30	25	1230	2210	1240	LD121M450O250A□□
	150	22	45	980	1770	1330	LD151M450M450A□□
	150	25	30	980	1770	1200	LD151M450N300A□□
	150	25	35	980	1770	1300	LD151M450N350A□□
	150	30	30	980	1770	1360	LD151M450O300A□□
	150	35	25	980	1770	1430	LD151M450P250A□□
	180	25	35	820	1470	1460	LD181M450N350A□□
	180	25	40	820	1470	1480	LD181M450N400A□□
	180	30	35	820	1470	1700	LD181M450O350A□□
	180	35	25	820	1470	1550	LD181M450P250A□□
	180	35	30	820	1470	1720	LD181M450P300A□□
	220	22	50	670	1210	1840	LD221M450M500A□□
	220	25	40	670	1210	1820	LD221M450N400A□□
	220	25	50	670	1210	1930	LD221M450N500A□□
	220	30	35	670	1210	1870	LD221M450O350A□□
	220	30	40	670	1210	1930	LD221M450O400A□□
	220	35	25	670	1210	1880	LD221M450P250A□□

□□: See description at end of standard ratings

For further information please contact sales@capxon.org

STANDARD RATINGS

V_R (V)	C_R (µF)	ø D (mm)	L (mm)	Typ. ESR +20°C ▪ 120Hz (mΩ)	Max. ESR +20°C ▪ 120Hz (mΩ)	I_R ▪ Max. Ripple Current +85°C ▪ 120Hz (mA rms)	CapXon Part Number
450	220	35	30	670	1210	1940	LD221M450P300A □□
	270	25	45	540	980	2110	LD271M450N450A □□
	270	25	55	540	980	2220	LD271M450N550A □□
	270	30	35	540	980	2100	LD271M450O350A □□
	270	30	40	540	980	2220	LD271M450O400A □□
	270	35	30	540	980	2050	LD271M450P300A □□
	270	35	35	540	980	2220	LD271M450P350A □□
	330	25	50	440	800	2240	LD331M450N500A □□
	330	30	40	440	800	2240	LD331M450O400A □□
	330	30	45	440	800	2400	LD331M450O450A □□
	330	35	30	440	800	2350	LD331M450P300A □□
	330	35	40	440	800	2530	LD331M450P400A □□
	390	30	45	380	680	2640	LD391M450O450A □□
	390	30	55	380	680	2740	LD391M450O550A □□
	390	35	35	380	680	2630	LD391M450P350A □□
	390	35	45	380	680	2830	LD391M450P450A □□
	470	30	50	310	560	2750	LD471M450O500A □□
	470	35	40	310	560	2790	LD471M450P400A □□
	470	35	50	310	560	3220	LD471M450P500A □□
	470	40	40	310	560	3220	LD471M450Q400A □□
	560	30	55	260	470	3630	LD561M450O550A □□
	560	35	45	260	470	3430	LD561M450P450A □□
	560	35	55	260	470	3630	LD561M450P550A □□
	560	40	50	260	470	3630	LD561M450Q500A □□
	680	35	50	220	390	3490	LD681M450P500A □□
	680	35	60	220	390	3520	LD681M450P600A □□
	680	40	50	220	390	3510	LD681M450Q500A □□
	820	35	65	180	320	4610	LD821M450P650A □□
	820	40	55	180	320	4610	LD821M450Q550A □□
	1000	35	70	150	270	5710	LD102M450P700A □□
	1000	40	60	150	270	5210	LD102M450Q600A □□
	1200	35	80	120	220	5910	LD122M450P800A □□
	1200	40	65	120	220	5910	LD122M450Q650A □□
	1500	40	80	100	180	7310	LD152M450Q800A □□
	1800	45	80	83	150	7910	LD182M450V800A □□
500	47	22	25	3130	5640	560	LD470M500M250A □□
	56	25	25	2630	4740	620	LD560M500N250A □□
	68	22	30	2170	3900	700	LD680M500M300A □□
	68	25	25	2170	3900	750	LD680M500N250A □□
	82	25	30	1790	3230	830	LD820M500N300A □□
	100	25	30	1470	2650	960	LD101M500N300A □□
	100	30	25	1470	2650	990	LD101M500O250A □□
	120	25	35	1230	2210	1120	LD121M500N350A □□
	120	30	30	1230	2210	1130	LD121M500O300A □□

□□: See description at end of standard ratings

For further information please contact sales@capxon.org

STANDARD RATINGS

V_R (V)	C_R (µF)	ø D (mm)	L (mm)	Typ. ESR +20°C ▪ 120Hz (mΩ)	Max. ESR +20°C ▪ 120Hz (mΩ)	I_R ▪ Max. Ripple Current +85°C ▪ 120Hz (mA rms)	CapXon Part Number
500	120	35	25	1230	2210	1150	LD121M500P250A ☐☐
	150	25	40	980	1770	1300	LD151M500N400A ☐☐
	150	30	30	980	1770	1320	LD151M500O300A ☐☐
	150	35	25	980	1770	1360	LD151M500P250A ☐☐
	180	25	45	820	1470	1580	LD181M500N450A ☐☐
	180	30	35	820	1470	1600	LD181M500O350A ☐☐
	180	35	30	820	1470	1630	LD181M500P300A ☐☐
	220	25	55	670	1210	1760	LD221M500N550A ☐☐
	220	30	40	670	1210	1730	LD221M500O400A ☐☐
	220	35	35	670	1210	1800	LD221M500P350A ☐☐
	270	30	45	540	980	2150	LD271M500O450A ☐☐
	270	35	35	540	980	2150	LD271M500P350A ☐☐
	330	30	50	440	800	2410	LD331M500O500A ☐☐
	330	35	40	440	800	2320	LD331M500P400A ☐☐
	390	35	45	380	680	2710	LD391M500P450A ☐☐
	470	35	55	310	560	2990	LD471M500P550A ☐☐
	560	35	60	260	470	3110	LD561M500P600A ☐☐
	560	40	50	260	470	3130	LD561M500Q500A ☐☐
	680	35	70	220	390	3210	LD681M500P700A ☐☐
	680	40	60	220	390	3220	LD681M500Q600A ☐☐
	820	35	80	180	320	4610	LD821M500P800A ☐☐
	820	40	70	180	320	4430	LD821M500Q700A ☐☐
	1000	40	80	150	270	5910	LD102M500Q800A ☐☐
	1200	40	80	120	220	5980	LD122M500Q800A ☐☐
	1500	40	100	100	180	6310	LD152M500QA00A ☐☐

☐☐☐: Enter **P6** for standard type ▪ 6mm pin length
☐☐☐☐: Enter **Z6** for 3-pin type ▪ 6mm pin length
☐☐☐: Enter **Y6** for multipin-type ▪ 6mm pin length
☐☐☐: Enter **P4** for standard type ▪ 4mm pin length
☐☐☐☐: Enter **Z4** for 3-pin type ▪ 4mm pin length
☐☐☐: Enter **Y4** for multipin type ▪ 4mm pin length

DIMENSIONS ▪ All dimensions in mm

2-pin version ▪ Standard type

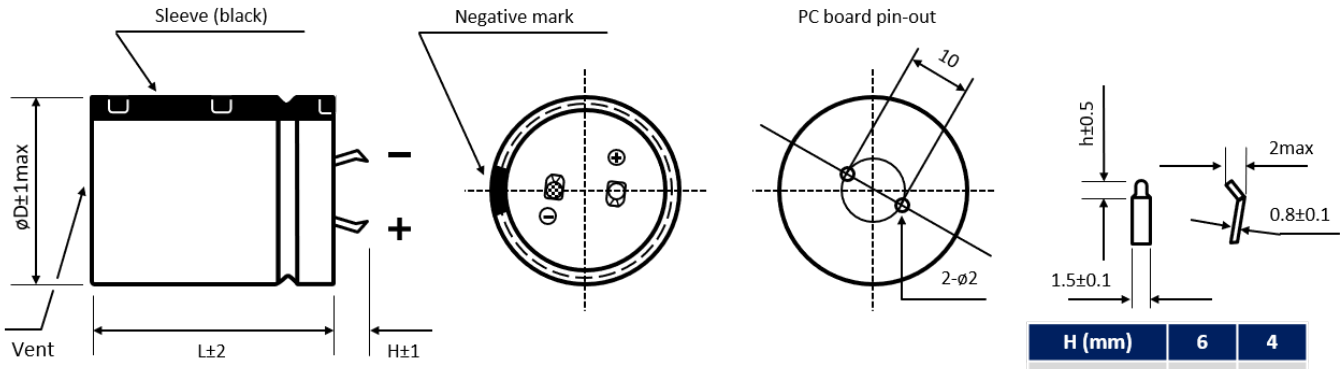

H (mm)	6	4
h (mm)	2.5	1.5

Standard: H = 6 ± 1mm. Also available H = 4 ± 1mm

For further information please contact sales@capxon.org

DIMENSIONS ▪ All dimensions in mm

3-pin version ▪ Polarity protection

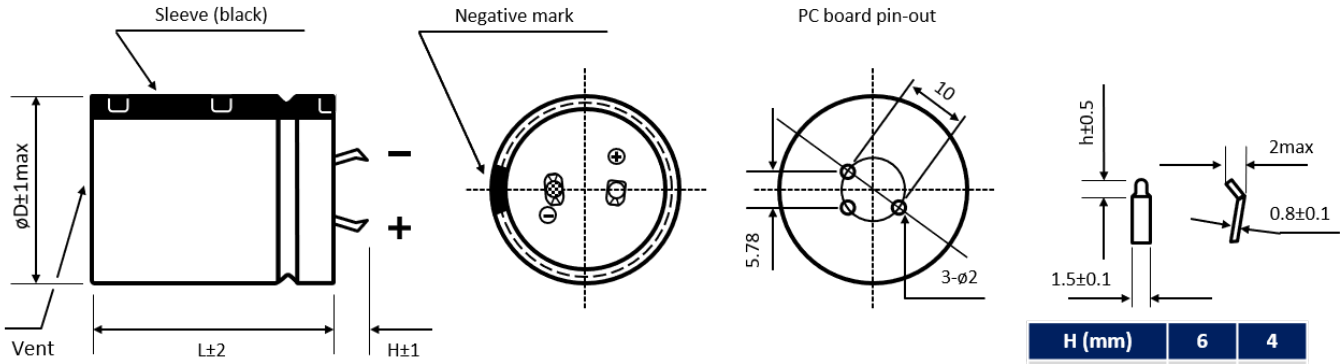

H (mm)	6	4
h (mm)	2.5	1.5

Standard: H = 4 ± 1mm. Also available H = 6 ± 1mm

Multipin version ▪ Diameter ø D ≥ 30 mm

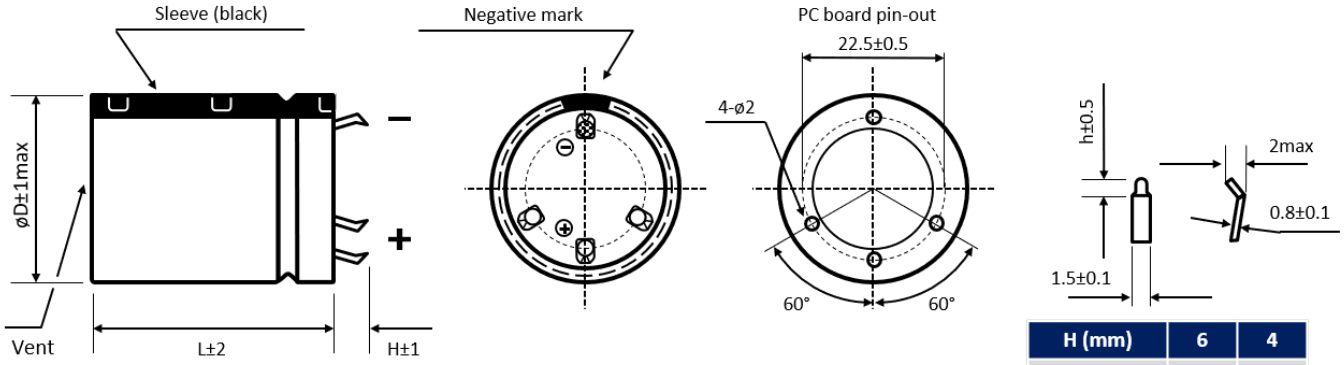

H (mm)	6	4
h (mm)	2.5	1.5

Standard: H = 6 ± 1mm. Also available H = 4 ± 1mm

Further possible terminal styles can be found in our packaging information liquid snap-in.

MULTIPLIER K_f for RIPPLE CURRENT vs. FREQUENCY

V_R (V) / Frequency (Hz)	50/60	100/120	300	1k	10k	50k - 100k
$10 \le V_R \le 100$	0.88	1	1.07	1.15	1.15	1.15
$160 \le V_R \le 250$	0.81	1	1.17	1.32	1.45	1.5
$315 \le V_R \le 500$	0.77	1	1.16	1.3	1.41	1.43

PRECAUTIONS, GUIDELINES AND PACKAGING INFORMATON

Unless otherwise agreed in individual specifications, all products are subject to our “General Precautions and Guidelines” as well as our “Packaging Information”. Please refer to the following pages in the table.

General Precautions and Guidelines	Packaging Information Liquid Snap-In
Page 837	Page 579

For further information please contact sales@capxon.org

USEFUL LIFE

$V_R \leq 100V$

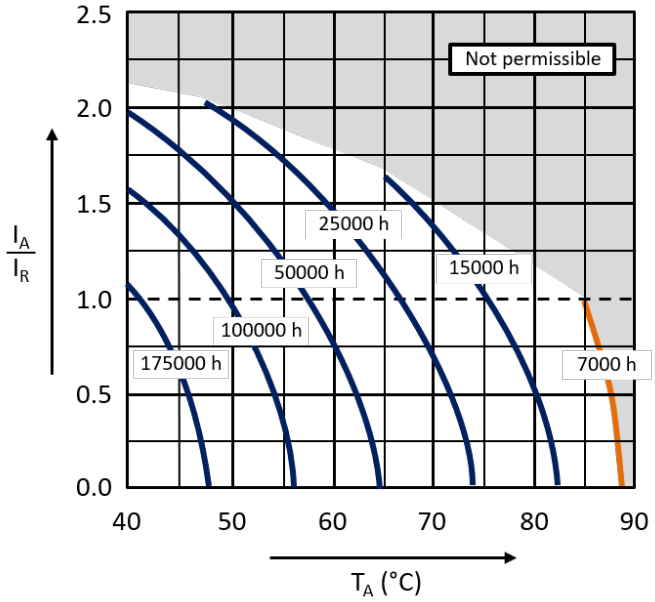

$V_R \geq 160V$

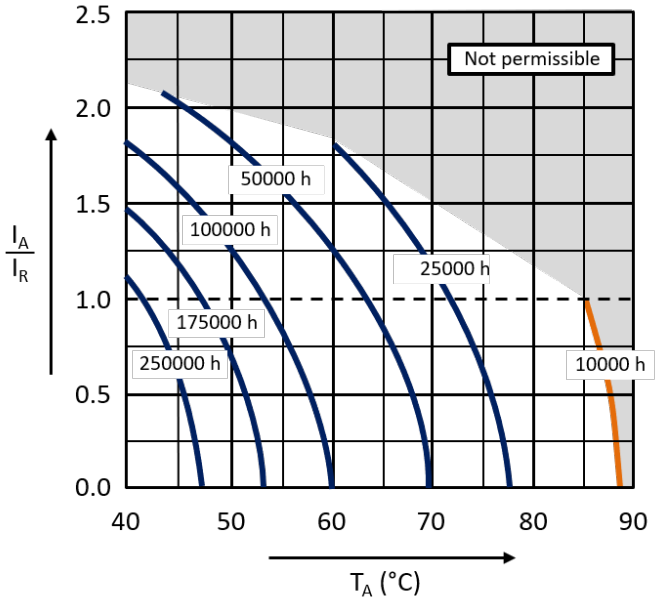

With: I_A: Application current
I_R: Rated ripple current (A RMS)
T_A: Application temperature of the capacitor

DISCLAIMER
All product related data (e.g. specification, statements and general information) are subject to change without any notice. It is necessary that the customer observes all product related technical / application information and handling instructions.

CapXon products are designed and manufactured according to severe quality and safety standards. Under no circumstance, CapXon warrants that any CapXon product is suitable for the purposes intended for your application, even CapXon knows the application. It is customer's duty and obligation to check and make sure that CapXon products are suitable for the purposes intended and select the correct and proper CapXon product. Customers are requested to perform a sufficient validation and reliability evaluation to assure needed safety level and reliability performance by suitable designs and to apply proper safeguards (e.g. redundancies, protective circuits).

Particular operating conditions (ambient temperature, ripple current, voltage, thermal resistance, etc.) as well as storage, production or assembly may affect the performance and the lifetime of the capacitor. Please consult CapXon for lifetime estimation, failure mode considerations or worst-case scenarios according to the product technology, product tolerances / deviations or change of the characteristics of the capacitor due to shipment, storage, handling, production and usage.

For aerospace or military application, life-saving, life-sustaining, safety critical applications or any application where failure may cause severe personal injury or death, please consult us before design-in the capacitor in your application.

Except for the written expressed warranties, CapXon does not impliedly, by assumption or whatever else, warrant, undertake, promise any other warranty or guaranty for any CapXon product.

For further information, please visit our website www.capxongroup.com or contact CapXon directly.

UD SERIES ▪ ULTRA LONG LIFE 85°C TYPE



KEY FEATURES

HIGH VOLTAGE · LONG LIFE

- **ALUMINUM ELECTROLYTIC CAPACITOR** ▪ Snap-In type
- Useful life: 85°C ▪ 10 000 hours
- Extremely stable dissipation factor and leakage current
- High voltage up to 600V
- Especially for applications with demanding operating environment

HF Halogen Free · RoHS & REACH COMPLIANT

SPECIFICATIONS

Items		Performance Characteristics	
Operating Temperature Range		-40 ~ +85°C	-25 ~ +85°C
Rated Voltage Range	V_R	200 ~ 450V DC	500 ~ 600V DC
Surge Voltage	V_S	($V_R \le 315V$) ▪ $V_S = 1.15 \cdot V_R$	($V_R > 315V$) ▪ $V_S = 1.10 \cdot V_R$
Capacitance Range	C_R	68 ~ 2700µF	47 ~ 680µF
Cap. Tolerance	ΔC	±20% (120Hz ▪ 20°C)	
Leakage Current (20°C ▪ V_R applied)	I_{LEAK}	≤ √3·C_R·V_R ▪ After 5 minutes [I_{LEAK} (µA) ; C_R (µF) ; V_R (V)]	

Dissipation Factor % (20°C ▪ 120Hz)	tanδ	V_R (V DC)	200 ~ 400	450 ~ 600
		tanδ	15	20

Self-Resistance (20°C ▪ 120Hz)	ESR	Not to exceed the values shown in standard ratings

Low Temperature Characteristics at 120Hz	Z ratio max.	V_R (V DC)	200 ~ 250	315 ~ 450	500	550 ~ 600
		Z-25°C/Z+20°C	4	5	6	7
		Z-40°C/Z+20°C	7	10	-	-

Lifetime Test		
Useful Life 85°C (V_R & I_R applied)	Test	**10 000 hours**
	△C/C_R	≤ ±20% of initial measured value
	tanδ	≤ 200% of initial specified value
	I_{Leak}	≤ the initial specified value
	Deviation Rate @ Useful Life: 10 000 FIT = 1%/1000h with 60% confidence level ▪ parts show higher drift as test criteria	
Endurance 85°C (V_R & I_R applied)	Test	**5 000 hours**
	△C/C_R	≤ ±15% of initial measured value
	tanδ	≤ 175% of initial specified value
	I_{Leak}	≤ the initial specified value
Shelf Life 85°C (V_R = 0)	Test	**1 000 hours**
	△C/C_R	≤ ±15% of initial measured value
	tanδ	≤ 175% of initial specified value
	I_{Leak}	≤ the initial specified value
	Before measurement: Restore capacitor to 20°C, apply V_R for 30 min according JIS-C-5101-4	
Vibration Resistance Test	Max. 10g force, f_{RANGE} 10Hz … 55Hz, amplitude 0.75mm; X/Y/Z-axis each 2h; capacitor rigidly clamped by body to surface ▪ IEC 60068-2-6	

For further information please contact sales@capxon.org

STANDARD RATINGS

V_R (V)	C_R (µF)	ø D (mm)	L (mm)	Typ. ESR +20°C ▪ 120Hz (mΩ)	Max. ESR +20°C ▪ 120Hz (mΩ)	I_R ▪ Max. Ripple Current +85°C ▪ 120Hz (mA rms)	CapXon Part Number
200	330	22	25	330	600	1550	UD331M200M250A □□
	330	25	25	330	600	1650	UD331M200N250A □□
	390	22	30	280	510	1760	UD391M200M300A □□
	390	25	25	280	510	1660	UD391M200N250A □□
	470	22	30	230	420	1980	UD471M200M300A □□
	470	25	25	230	420	1930	UD471M200N250A □□
	560	22	35	200	360	2250	UD561M200M350A □□
	560	25	30	200	360	2150	UD561M200N300A □□
	680	22	40	160	290	2620	UD681M200M400A □□
	680	25	35	160	290	2560	UD681M200N350A □□
	680	30	25	160	290	2480	UD681M200O250A □□
	820	22	45	130	240	2990	UD821M200M450A □□
	820	25	35	130	240	2840	UD821M200N350A □□
	820	30	30	130	240	2600	UD821M200O300A □□
	820	35	25	130	240	2420	UD821M200P250A □□
	1000	25	45	110	200	3290	UD102M200N450A □□
	1000	30	30	110	200	2760	UD102M200O300A □□
	1000	35	25	110	200	2700	UD102M200P250A □□
	1200	25	50	94	170	3750	UD122M200N500A □□
	1200	30	35	94	170	3540	UD122M200O350A □□
	1200	35	30	94	170	3540	UD122M200P300A □□
	1500	30	40	72	130	3920	UD152M200O400A □□
	1500	35	35	72	130	3920	UD152M200P350A □□
	1800	30	50	61	110	4750	UD182M200O500A □□
	1800	35	40	61	110	4700	UD182M200P400A □□
	2200	30	55	50	90	5310	UD222M200O550A □□
	2200	35	45	50	90	5300	UD222M200P450A □□
	2700	35	50	41	74	5480	UD272M200P500A □□
250	150	22	25	740	1330	950	UD151M250M250A □□
	180	22	25	620	1110	1150	UD181M250M250A □□
	220	22	30	500	900	1290	UD221M250M300A □□
	220	25	25	500	900	1310	UD221M250N250A □□
	270	22	30	410	740	1470	UD271M250M300A □□
	270	25	25	410	740	1470	UD271M250N250A □□
	330	22	30	330	600	1680	UD331M250M300A □□
	330	25	25	330	600	1680	UD331M250N250A □□
	390	22	35	280	510	2000	UD391M250M350A □□
	390	25	30	280	510	1950	UD391M250N300A □□
	390	30	25	280	510	2100	UD391M250O250A □□
	470	22	40	230	420	2210	UD471M250M400A □□
	470	25	30	230	420	2150	UD471M250N300A □□
	470	35	25	230	420	2200	UD471M250P250A □□
	560	22	40	200	360	2500	UD561M250M400A □□
	560	25	35	200	360	2500	UD561M250N350A □□

□□: See description at end of standard ratings

For further information please contact sales@capxon.org

STANDARD RATINGS

V_R (V)	C_R (µF)	ø D (mm)	L (mm)	Typ. ESR +20°C ▪ 120Hz (mΩ)	Max. ESR +20°C ▪ 120Hz (mΩ)	I_R ▪ Max. Ripple Current +85°C ▪ 120Hz (mA rms)	CapXon Part Number
250	560	30	30	200	360	2510	UD561M250O300A □□
	560	35	25	200	360	2530	UD561M250P250A □□
	680	22	50	160	290	2910	UD681M250M500A □□
	680	25	40	160	290	2800	UD681M250N400A □□
	680	30	30	160	290	2750	UD681M250O300A □□
	680	35	25	160	290	2640	UD681M250P250A □□
	820	25	45	130	240	3120	UD821M250N450A □□
	820	30	35	130	240	3010	UD821M250O350A □□
	820	35	30	130	240	3000	UD821M250P300A □□
	1000	25	50	110	200	3600	UD102M250N500A □□
	1000	30	40	110	200	3460	UD102M250O400A □□
	1000	35	30	110	200	3390	UD102M250P300A □□
	1200	30	45	94	170	3930	UD122M250O450A □□
	1200	35	35	94	170	3810	UD122M250P350A □□
	1500	30	50	72	130	4520	UD152M250O500A □□
	1500	35	40	72	130	4520	UD152M250P400A □□
	1800	35	45	61	110	5210	UD182M250P450A □□
	2200	35	55	50	90	5700	UD222M250P550A □□
350	560	35	50	200	360	3210	UD561M350P500A □□
	680	35	40	160	290	3190	UD681M350P400A □□
	820	35	50	130	240	3670	UD821M350P500A □□
	1000	35	55	110	200	4230	UD102M350P550A □□
	1500	40	80	72	130	6520	UD152M350Q800A □□
	1500	45	70	72	130	6520	UD152M350V700A □□
	2200	45	100	50	90	8700	UD222M350VA00A □□
400	82	22	25	1350	2430	790	UD820M400M250A □□
	100	22	25	1110	1990	900	UD101M400M250A □□
	100	25	25	1110	1990	1050	UD101M400N250A □□
	120	22	30	920	1660	1050	UD121M400M300A □□
	120	25	25	920	1660	1050	UD121M400N250A □□
	150	22	30	740	1330	1150	UD151M400M300A □□
	150	25	25	740	1330	1150	UD151M400N250A □□
	180	22	35	620	1110	1310	UD181M400M350A □□
	180	25	30	620	1110	1320	UD181M400N300A □□
	180	30	25	620	1110	1320	UD181M400O250A □□
	220	22	40	500	900	1550	UD221M400M400A □□
	220	25	35	500	900	1520	UD221M400N350A □□
	220	30	25	500	900	1510	UD221M400O250A □□
	220	35	25	500	900	1550	UD221M400P250A □□
	270	22	45	410	740	1800	UD271M400M450A □□
	270	25	40	410	740	1760	UD271M400N400A □□
	270	30	30	410	740	1760	UD271M400O300A □□
	270	35	25	410	740	1720	UD271M400P250A □□
	330	25	45	330	600	2050	UD331M400N450A □□

□□: See description at end of standard ratings

For further information please contact sales@capxon.org

STANDARD RATINGS

V_R (V)	C_R (µF)	ø D (mm)	L (mm)	Typ. ESR +20°C ▪ 120Hz (mΩ)	Max. ESR +20°C ▪ 120Hz (mΩ)	I_R ▪ Max. Ripple Current +85°C ▪ 120Hz (mA rms)	CapXon Part Number
400	330	30	35	330	600	2020	UD331M400O350A □□
	330	35	25	330	600	2010	UD331M400P250A □□
	390	25	50	280	510	2330	UD391M400N500A □□
	390	30	35	280	510	2180	UD391M400O350A □□
	390	35	30	280	510	2240	UD391M400P300A □□
	470	25	55	230	420	2680	UD471M400N550A □□
	470	30	40	230	420	2650	UD471M400O400A □□
	470	35	35	230	420	2590	UD471M400P350A □□
	560	30	45	200	360	3000	UD561M400O450A □□
	560	35	35	200	360	2980	UD561M400P350A □□
	680	30	55	160	290	3510	UD681M400O550A □□
	680	35	40	160	290	3200	UD681M400P400A □□
	680	35	45	160	290	3420	UD681M400P450A □□
	820	35	50	130	240	3720	UD821M400P500A □□
	1000	35	55	110	200	4300	UD102M400P550A □□
	1200	35	65	94	170	4820	UD122M400P650A □□
	1200	40	55	94	170	4800	UD122M400Q550A □□
	1500	40	80	72	130	6620	UD152M400Q800A □□
	1500	45	60	72	130	6310	UD152M400V600A □□
	1800	45	80	61	110	7600	UD182M400V800A □□
450	68	22	25	2170	3900	680	UD680M450M250A □□
	82	22	25	1790	3230	810	UD820M450M250A □□
	82	25	25	1790	3230	810	UD820M450N250A □□
	100	22	30	1470	2650	940	UD101M450M300A □□
	100	30	25	1470	2650	980	UD101M450O250A □□
	120	22	30	1230	2210	1050	UD121M450M300A □□
	120	25	25	1230	2210	1090	UD121M450N250A □□
	150	22	35	980	1770	1210	UD151M450M350A □□
	150	25	30	980	1770	1210	UD151M450N300A □□
	150	30	25	980	1770	1210	UD151M450O250A □□
	180	22	40	820	1470	1390	UD181M450M400A □□
	180	25	35	820	1470	1390	UD181M450N350A □□
	180	30	25	820	1470	1350	UD181M450O250A □□
	220	22	50	670	1210	1680	UD221M450M500A □□
	220	25	40	670	1210	1680	UD221M450N400A □□
	220	30	30	670	1210	1620	UD221M450O300A □□
	220	35	25	670	1210	1600	UD221M450P250A □□
	270	25	45	540	980	1850	UD271M450N450A □□
	270	30	35	540	980	1820	UD271M450O350A □□
	270	35	30	540	980	1910	UD271M450P300A □□
	330	25	50	440	800	2180	UD331M450N500A □□
	330	30	40	440	800	2210	UD331M450O400A □□
	330	35	30	440	800	2200	UD331M450P300A □□
	390	30	45	380	680	2510	UD391M450O450A □□

□□: See description at end of standard ratings

For further information please contact sales@capxon.org

STANDARD RATINGS

V_R (V)	C_R (µF)	ø D (mm)	L (mm)	Typ. ESR +20°C ▪ 120Hz (mΩ)	Max. ESR +20°C ▪ 120Hz (mΩ)	I_R ▪ Max. Ripple Current +85°C ▪ 120Hz (mA rms)	CapXon Part Number
450	390	35	35	380	680	2500	UD391M450P350A □□
	470	30	50	310	560	2880	UD471M450O500A □□
	470	35	40	310	560	2800	UD471M450P400A □□
	560	30	55	260	470	3250	UD561M450O550A □□
	560	35	45	260	470	3260	UD561M450P450A □□
	680	35	50	220	390	3480	UD681M450P500A □□
	1500	45	100	100	180	7240	UD152M450VA00A □□
500	47	22	25	3130	5640	520	UD470M500M250A □□
	68	22	30	2170	3900	700	UD680M500M300A □□
	68	25	25	2170	3900	700	UD680M500N250A □□
	82	25	30	1790	3230	820	UD820M500N300A □□
	100	25	35	1470	2650	970	UD101M500N350A □□
	100	30	25	1470	2650	970	UD101M500O250A □□
	120	25	35	1230	2210	1090	UD121M500N350A □□
	120	30	30	1230	2210	1100	UD121M500O300A □□
	150	25	40	980	1770	1260	UD151M500N400A □□
	150	30	30	980	1770	1300	UD151M500O300A □□
	150	35	25	980	1770	1320	UD151M500P250A □□
	180	25	45	820	1470	1500	UD181M500N450A □□
	180	30	35	820	1470	1530	UD181M500O350A □□
	180	35	30	820	1470	1550	UD181M500P300A □□
	220	25	55	670	1210	1610	UD221M500N550A □□
	220	30	40	670	1210	1750	UD221M500O400A □□
	220	35	35	670	1210	1800	UD221M500P350A □□
	270	30	45	540	980	2010	UD271M500O450A □□
	270	35	35	540	980	2030	UD271M500P350A □□
	330	30	55	440	800	2320	UD331M500O550A □□
	330	35	40	440	800	2320	UD331M500P400A □□
	390	35	45	380	680	2630	UD391M500P450A □□
	470	35	55	310	560	2990	UD471M500P550A □□
	560	35	65	260	470	3240	UD561M500P650A □□
	680	40	60	220	390	3900	UD681M500Q600A □□
550	56	25	25	2630	4740	660	UD560M550N250A □□
	68	25	30	2170	3900	750	UD680M550N300A □□
	82	25	35	1790	3230	840	UD820M550N350A □□
	82	30	25	1790	3230	870	UD820M550O250A □□
	100	25	35	1470	2650	1010	UD101M550N350A □□
	100	30	30	1470	2650	1010	UD101M550O300A □□
	120	25	40	1230	2210	1120	UD121M550N400A □□
	120	30	35	1230	2210	1150	UD121M550O350A □□
	120	35	25	1230	2210	1150	UD121M550P250A □□
	150	25	50	980	1770	1360	UD151M550N500A □□
	150	30	35	980	1770	1300	UD151M550O350A □□
	150	35	30	980	1770	1450	UD151M550P300A □□

□□: See description at end of standard ratings

For further information please contact sales@capxon.org

STANDARD RATINGS

V_R (V)	C_R (µF)	ø D (mm)	L (mm)	Typ. ESR +20°C ▪ 120Hz (mΩ)	Max. ESR +20°C ▪ 120Hz (mΩ)	I_R ▪ Max. Ripple Current +85°C ▪ 120Hz (mA rms)	CapXon Part Number
550	180	25	55	820	1470	1570	UD181M550N550A ☐☐
	180	30	40	820	1470	1580	UD181M550O400A ☐☐
	180	35	35	820	1470	1630	UD181M550P350A ☐☐
	220	30	50	670	1210	1870	UD221M550O500A ☐☐
	220	35	40	670	1210	1870	UD221M550P400A ☐☐
	270	30	55	540	980	2120	UD271M550O550A ☐☐
	270	35	45	540	980	2150	UD271M550P450A ☐☐
	330	35	50	440	800	2450	UD331M550P500A ☐☐
	390	35	55	380	680	2780	UD391M550P550A ☐☐
600	47	25	25	3130	5640	610	UD470M600N250A ☐☐
	56	25	30	2630	4740	680	UD560M600N300A ☐☐
	68	25	35	2170	3900	820	UD680M600N350A ☐☐
	68	30	25	2170	3900	820	UD680M600O250A ☐☐
	82	25	35	1790	3230	880	UD820M600N350A ☐☐
	82	30	30	1790	3230	920	UD820M600O300A ☐☐
	100	25	40	1470	2650	1050	UD101M600N400A ☐☐
	100	30	35	1470	2650	1070	UD101M600O350A ☐☐
	100	35	25	1470	2650	1110	UD101M600P250A ☐☐
	120	25	50	1230	2210	1190	UD121M600N500A ☐☐
	120	30	35	1230	2210	1230	UD121M600O350A ☐☐
	120	35	30	1230	2210	1310	UD121M600P300A ☐☐
	150	25	55	980	1770	1530	UD151M600N550A ☐☐
	150	30	45	980	1770	1530	UD151M600O450A ☐☐
	150	35	35	980	1770	1530	UD151M600P350A ☐☐
	180	30	50	820	1470	1680	UD181M600O500A ☐☐
	180	35	40	820	1470	1720	UD181M600P400A ☐☐
	220	30	55	670	1210	1950	UD221M600O550A ☐☐
	220	35	45	670	1210	1950	UD221M600P450A ☐☐
	270	35	50	540	980	2260	UD271M600P500A ☐☐

☐☐☐: Enter **P6** for standard type ▪ 6mm pin length
☐☐☐: Enter **Z6** for 3-pin type ▪ 6mm pin length
☐☐☐: Enter **Y6** for multipin-type ▪ 6mm pin length
☐☐☐: Enter **P4** for standard type ▪ 4mm pin length
☐☐☐: Enter **Z4** for 3-pin type ▪ 4mm pin length
☐☐☐: Enter **Y4** for multipin type ▪ 4mm pin length

For further information please contact sales@capxon.org

DIMENSIONS ▪ All dimensions in mm

2-pin version ▪ Standard type

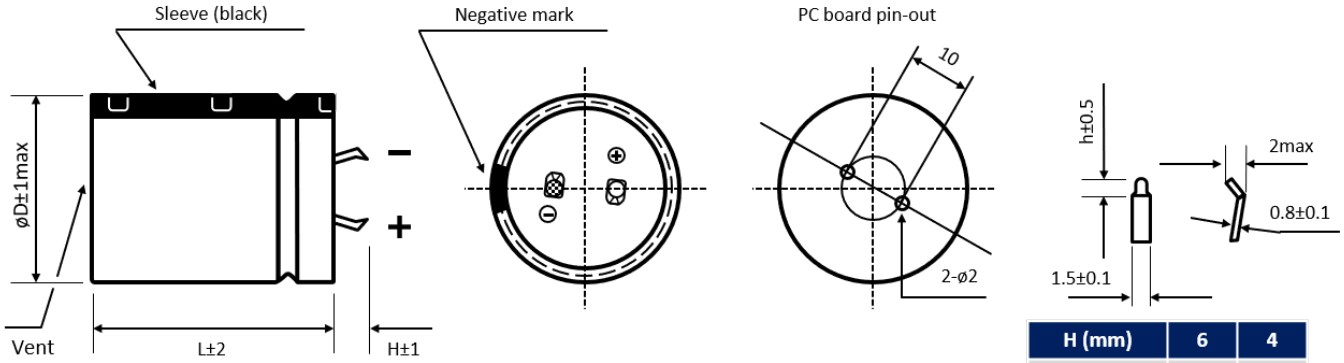

H (mm)	6	4
h (mm)	2.5	1.5

Standard: H = 6 ± 1mm. Also available H = 4 ± 1mm

3-pin version ▪ Polarity protection

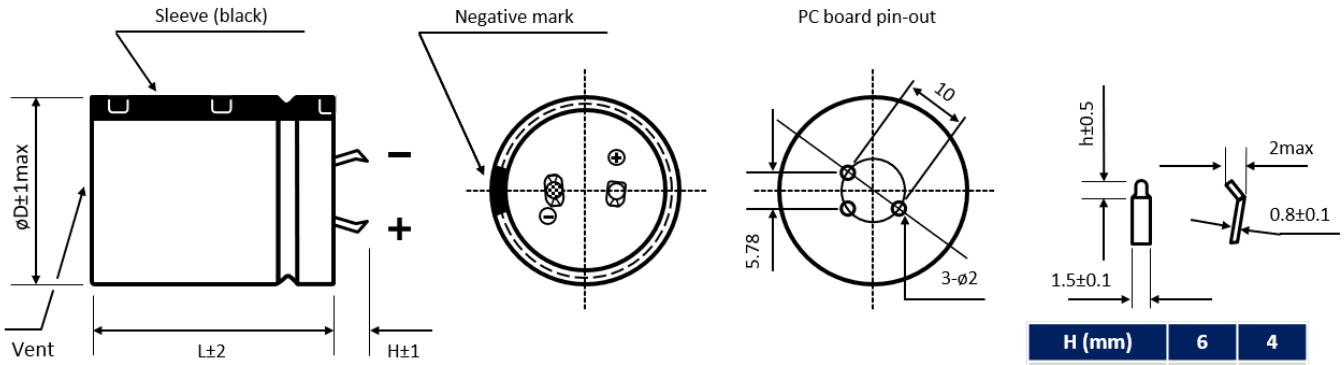

H (mm)	6	4
h (mm)	2.5	1.5

Standard: H = 4 ± 1mm. Also available H = 6 ± 1mm

Multipin version ▪ Diameter ø D ≥ 30 mm

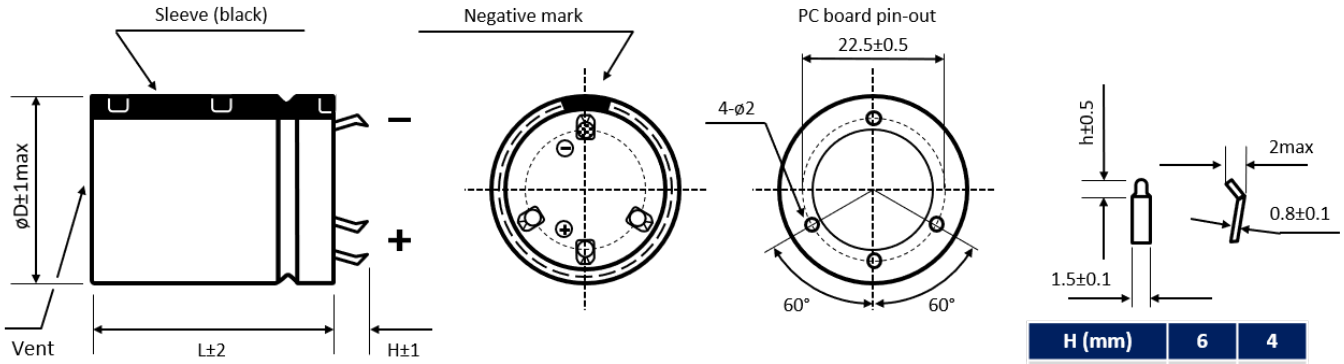

H (mm)	6	4
h (mm)	2.5	1.5

Standard: H = 6 ± 1mm. Also available H = 4 ± 1mm

Further possible terminal styles can be found in our packaging information liquid snap-in.

For further information please contact sales@capxon.org

MULTIPLIER K_f for RIPPLE CURRENT vs. FREQUENCY

V_R (V) / Frequency (Hz)	50/60	100/120	300	1k	10k	50k - 100k
$200 \le V_R \le 250$	0.81	1	1.17	1.32	1.45	1.5
$350 \le V_R \le 600$	0.77	1	1.16	1.3	1.41	1.43

PRECAUTIONS, GUIDELINES AND PACKAGING INFORMATON

Unless otherwise agreed in individual specifications, all products are subject to our “General Precautions and Guidelines” as well as our “Packaging Information”. Please refer to the following pages in the table.

General Precautions and Guidelines	Packaging Information Liquid Snap-In
Page 837	Page 579

USEFUL LIFE

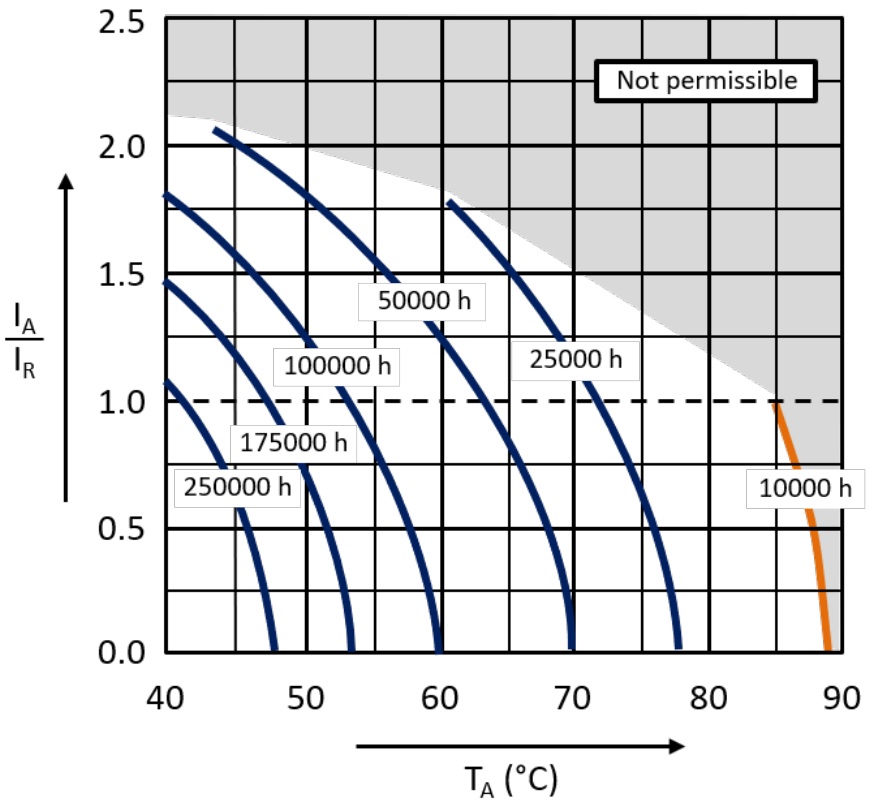

With: I_A: Application current
I_R: Rated ripple current (A RMS)
T_A: Application temperature of the capacitor

For further information please contact sales@capxon.org

DISCLAIMER

All product related data (e.g. specification, statements and general information) are subject to change without any notice. It is necessary that the customer observes all product related technical / application information and handling instructions.

CapXon products are designed and manufactured according to severe quality and safety standards. Under no circumstance, CapXon warrants that any CapXon product is suitable for the purposes intended for your application, even CapXon knows the application. It is customer's duty and obligation to check and make sure that CapXon products are suitable for the purposes intended and select the correct and proper CapXon product. Customers are requested to perform a sufficient validation and reliability evaluation to assure needed safety level and reliability performance by suitable designs and to apply proper safeguards (e.g. redundancies, protective circuits).

Particular operating conditions (ambient temperature, ripple current, voltage, thermal resistance, etc.) as well as storage, production or assembly may affect the performance and the lifetime of the capacitor. Please consult CapXon for lifetime estimation, failure mode considerations or worst-case scenarios according to the product technology, product tolerances / deviations or change of the characteristics of the capacitor due to shipment, storage, handling, production and usage.

For aerospace or military application, life-saving, life-sustaining, safety critical applications or any application where failure may cause severe personal injury or death, please consult us before design-in the capacitor in your application.

Except for the written expressed warranties, CapXon does not impliedly, by assumption or whatever else, warrant, undertake, promise any other warranty or guaranty for any CapXon product.

For further information, please visit our website www.capxongroup.com or contact CapXon directly.

HP SERIES ▪ STANDARD 105°C TYPE



KEY FEATURES

HIGH VOLTAGE

- **ALUMINUM ELECTROLYTIC CAPACITOR** ▪ Snap-In type
- Useful life: 105°C ▪ 3 000 hours up to 5 000 hours
- Wide capacitance range
- Small dimensions
- Stable operating under steady state environment

HF Halogen Free

RoHS & REACH COMPLIANT

SPECIFICATIONS

Items		Performance Characteristics										
Operating Temperature Range		-40 ~ +105°C						-25 ~ +105°C				
Rated Voltage Range	V_R	6.3 ~ 350V DC						400 ~ 550V DC				
Surge Voltage	V_S	($V_R \le 315V$): $V_S = 1.15 \cdot V_R$						($V_R > 315V$): $V_S = 1.10 \cdot V_R$				
Capacitance Range	C_R	68 ~ 100000µF						47 ~ 1200µF				
Cap. Tolerance	ΔC	±20% (120Hz ▪ 20°C)										
Leakage Current (20°C ▪ V_R applied)	I_{LEAK}	≤ √3·C_R·V_R ▪ After 5 minutes [I_{LEAK} (µA) ; C_R (µF) ; V_R (V)]										
Dissipation Factor % (20°C ▪ 120Hz)	tanδ	µF / V DC	6.3	10	16	25	35	50	63	80	100	160 ~ 420	450 ~ 550
		≤ 8200	-	35	35	30	25	20	20	15	15	15	20
		10000 ~ 22000	55	40	40	35	30	30	25	20	-	-	-
		≥ 27000	60	50	40	35	35	30	25	-	-	-	-
Low Temperature Characteristics at 120Hz	Z ratio max.	V_R (V DC)	6.3 ~ 16	25	35	50 ~ 100	160 ~ 250	315 ~ 450	500	550			
		Z-25°C/Z+20°C	4	3	3	3	4	8	8	10			
		Z-40°C/Z+20°C	10	10	8	6	7	10	-	-			

Lifetime Test		$V_R \le 100V$	$V_R > 100V$
Useful Life 105°C (V_R & I_R applied)	Test	**3 000 hours**	**5 000 hours**
	△C/C_R	≤ ±30% of initial measured value	≤ ±20% of initial measured value
	tanδ	≤ 300% of initial specified value	≤ 200% of initial specified value
	I_{Leak}	≤ the initial specified value	≤ the initial specified value
	Deviation Rate @ Useful Life: 10 000 FIT = 1%/1000h with 60% confidence level ▪ parts show higher drift as test criteria		
Endurance 105°C (V_R & I_R applied)	Test	**2 000 hours**	
	△C/C_R	≤ ±20% of initial measured value	≤ ±15% of initial measured value
	tanδ	≤ 200% of initial specified value	≤ 175% of initial specified value
	I_{Leak}	≤ the initial specified value	≤ the initial specified value
Shelf Life 105°C (V_R = 0)	Test	**1 000 hours**	
	△C/C_R	≤ ±20% of initial measured value	≤ ±15% of initial measured value
	tanδ	≤ 200% of initial specified value	≤ 175% of initial specified value
	I_{Leak}	≤ the initial specified value	≤ the initial specified value
	Before measurement: Restore capacitor to 20°C, apply V_R for 30 min according JIS-C-5101-4		
Vibration Resistance Test	Max. 10g force, f_{RANGE} 10Hz … 55Hz, amplitude 0.75mm; X/Y/Z-axis each 2h; capacitor rigidly clamped by body to surface ▪ IEC 60068-2-6		

For further information please contact sales@capxon.org

STANDARD RATINGS

V_R (V)	C_R (µF)	ø D (mm)	L (mm)	Typ. ESR +20°C ▪ 120Hz (mΩ)	Max. ESR +20°C ▪ 120Hz (mΩ)	I_R ▪ Max. Ripple Current +105°C ▪ 120Hz (mA rms)	CapXon Part Number
6.3	12000	22	25	47	61	1540	HP123M6R3M250A □□
	15000	22	25	37	49	1720	HP153M6R3M250A □□
	18000	22	30	31	41	1950	HP183M6R3M300A □□
	18000	25	25	31	41	1960	HP183M6R3N250A □□
	22000	22	35	26	33	2230	HP223M6R3M350A □□
	22000	25	30	26	33	2250	HP223M6R3N300A □□
	22000	30	25	26	33	2280	HP223M6R3O250A □□
	27000	22	40	23	29	2540	HP273M6R3M400A □□
	27000	25	35	23	29	2570	HP273M6R3N350A □□
	27000	30	25	23	29	2590	HP273M6R3O250A □□
	33000	22	45	19	24	2880	HP333M6R3M450A □□
	33000	25	40	19	24	2930	HP333M6R3N400A □□
	33000	30	30	19	24	2890	HP333M6R3O300A □□
	33000	35	25	19	24	2930	HP333M6R3P250A □□
	39000	25	40	16	20	3180	HP393M6R3N400A □□
	39000	30	35	16	20	3260	HP393M6R3O350A □□
	39000	35	30	16	20	3400	HP393M6R3P300A □□
	47000	25	50	13	17	3690	HP473M6R3N500A □□
	47000	30	40	13	17	3690	HP473M6R3O400A □□
	47000	35	30	13	17	3730	HP473M6R3P300A □□
	56000	30	45	11	14	4160	HP563M6R3O450A □□
	56000	35	35	11	14	4170	HP563M6R3P350A □□
	68000	30	50	9	12	4710	HP683M6R3O500A □□
	68000	35	40	9	12	4710	HP683M6R3P400A □□
	82000	35	45	8	10	5320	HP823M6R3P450A □□
10	4700	22	25	76	99	1240	HP472M010M250A □□
	6800	22	25	53	68	1400	HP682M010M250A □□
	8200	22	25	44	57	1650	HP822M010M250A □□
	10000	22	25	36	46	1900	HP103M010M250A □□
	12000	22	30	34	44	2480	HP123M010M300A □□
	12000	25	25	34	44	2480	HP123M010N250A □□
	15000	22	35	27	35	2710	HP153M010M350A □□
	15000	25	25	27	35	2600	HP153M010N250A □□
	18000	22	35	23	29	2890	HP183M010M350A □□
	18000	25	30	23	29	2940	HP183M010N300A □□
	18000	30	25	23	29	2940	HP183M010O250A □□
	22000	22	40	19	24	2960	HP223M010M400A □□
	22000	25	30	19	24	2960	HP223M010N300A □□
	22000	30	25	19	24	3080	HP223M010O250A □□
	27000	22	50	19	25	3120	HP273M010M500A □□
	27000	25	40	19	25	3120	HP273M010N400A □□
	27000	30	30	19	25	3130	HP273M010O300A □□
	27000	35	25	19	25	3210	HP273M010P250A □□
	33000	25	45	15	20	3320	HP333M010N450A □□

□□: See description at end of standard ratings

For further information please contact sales@capxon.org

STANDARD RATINGS

V_R (V)	C_R (µF)	ø D (mm)	L (mm)	Typ. ESR +20°C ▪ 120Hz (mΩ)	Max. ESR +20°C ▪ 120Hz (mΩ)	I_R ▪ Max. Ripple Current +105°C ▪ 120Hz (mA rms)	CapXon Part Number
10	33000	35	30	15	20	3850	HP333M010P300A □□
	39000	30	40	13	17	3850	HP393M010O400A □□
	47000	30	45	11	14	3980	HP473M010O450A □□
	47000	35	35	11	14	4050	HP473M010P350A □□
	56000	30	50	9	12	4210	HP563M010O500A □□
	56000	35	40	9	12	4320	HP563M010P400A □□
	68000	35	45	8	10	5120	HP683M010P450A □□
	100000	35	50	5	7	6140	HP104M010P500A □□
16	4700	22	25	76	99	1550	HP472M016M250A □□
	6800	22	25	53	68	1780	HP682M016M250A □□
	8200	22	25	44	57	2140	HP822M016M250A □□
	10000	22	30	36	46	2480	HP103M016M300A □□
	10000	25	25	36	46	2560	HP103M016N250A □□
	12000	22	35	34	44	2800	HP123M016M350A □□
	12000	25	30	34	44	2900	HP123M016N300A □□
	12000	30	25	34	44	2970	HP123M016O250A □□
	15000	22	40	27	35	3170	HP153M016M400A □□
	15000	25	35	27	35	3290	HP153M016N350A □□
	15000	30	30	27	35	3380	HP153M016O300A □□
	18000	22	45	23	29	3500	HP183M016M450A □□
	18000	25	40	23	29	3650	HP183M016N400A □□
	18000	30	30	23	29	3650	HP183M016O300A □□
	22000	22	45	19	24	3650	HP223M016M450A □□
	22000	25	40	19	24	3710	HP223M016N400A □□
	22000	30	35	19	24	3830	HP223M016O350A □□
	27000	25	40	15	20	3950	HP273M016N400A □□
	27000	30	35	15	20	3960	HP273M016O350A □□
	33000	25	45	12	16	4320	HP333M016N450A □□
	33000	30	35	12	16	4410	HP333M016O350A □□
	33000	35	30	12	16	4430	HP333M016P300A □□
	39000	30	40	10	14	4900	HP393M016O400A □□
	39000	35	35	10	14	5100	HP393M016P350A □□
	47000	30	45	9	11	5300	HP473M016O450A □□
	47000	35	40	9	11	5520	HP473M016P400A □□
	56000	30	50	7	10	6000	HP563M016O500A □□
	56000	35	40	7	10	6050	HP563M016P400A □□
	68000	35	50	6	8	6400	HP683M016P500A □□
25	2200	22	25	140	180	1030	HP222M025M250A □□
	3300	22	25	92	120	1480	HP332M025M250A □□
	4700	22	25	65	85	1730	HP472M025M250A □□
	5600	22	25	55	71	1850	HP562M025M250A □□
	6800	22	30	45	59	2050	HP682M025M300A □□
	6800	25	25	45	59	2100	HP682M025N250A □□
	8200	22	30	37	49	2310	HP822M025M300A □□

□□: See description at end of standard ratings

For further information please contact sales@capxon.org

STANDARD RATINGS

V_R (V)	C_R (µF)	ø D (mm)	L (mm)	Typ. ESR +20°C ▪ 120Hz (mΩ)	Max. ESR +20°C ▪ 120Hz (mΩ)	I_R ▪ Max. Ripple Current +105°C ▪ 120Hz (mA rms)	CapXon Part Number
25	8200	25	25	37	49	2310	HP822M025N250A □□
	10000	22	35	31	40	2650	HP103M025M350A □□
	10000	25	30	31	40	2680	HP103M025N300A □□
	12000	22	40	30	39	2920	HP123M025M400A □□
	12000	25	30	30	39	2910	HP123M025N300A □□
	12000	30	25	30	39	2930	HP123M025O250A □□
	15000	22	45	24	31	3180	HP153M025M450A □□
	15000	25	35	24	31	3100	HP153M025N350A □□
	15000	30	30	24	31	3320	HP153M025O300A □□
	18000	22	45	20	26	3510	HP183M025M450A □□
	18000	25	40	20	26	3600	HP183M025N400A □□
	18000	30	30	20	26	3800	HP183M025O300A □□
	22000	25	45	16	21	4040	HP223M025N450A □□
	22000	30	35	16	21	4040	HP223M025O350A □□
	22000	35	30	16	21	4040	HP223M025P300A □□
	27000	30	40	13	17	4740	HP273M025O400A □□
	27000	35	35	13	17	4760	HP273M025P350A □□
	33000	30	45	11	14	5500	HP333M025O450A □□
	33000	35	40	11	14	5700	HP333M025P400A □□
	39000	35	45	9	12	5800	HP393M025P450A □□
	47000	35	50	8	10	6300	HP473M025P500A □□
35	1500	22	25	170	220	1260	HP152M035M250A □□
	2200	22	25	120	150	1350	HP222M035M250A □□
	2700	22	25	92	120	1360	HP272M035M250A □□
	3300	22	25	77	100	1490	HP332M035M250A □□
	3900	22	30	65	85	1820	HP392M035M300A □□
	4700	22	30	54	71	2020	HP472M035M300A □□
	4700	25	25	54	71	2120	HP472M035N250A □□
	5600	22	30	46	59	2250	HP562M035M300A □□
	5600	25	25	46	59	2350	HP562M035N250A □□
	6800	22	35	38	49	2360	HP682M035M350A □□
	6800	25	30	38	49	2410	HP682M035N300A □□
	6800	30	25	38	49	2500	HP682M035O250A □□
	8200	22	40	31	40	2550	HP822M035M400A □□
	8200	25	35	31	40	2610	HP822M035N350A □□
	8200	30	25	31	40	2650	HP822M035O250A □□
	10000	22	40	26	33	3000	HP103M035M400A □□
	10000	25	35	26	33	3150	HP103M035N350A □□
	10000	30	30	26	33	3350	HP103M035O300A □□
	12000	22	45	26	33	3470	HP123M035M450A □□
	12000	25	40	26	33	3500	HP123M035N400A □□
	12000	30	35	26	33	3520	HP123M035O350A □□
	12000	35	30	26	33	3580	HP123M035P300A □□
	15000	25	45	20	27	3650	HP153M035N450A □□

□□: See description at end of standard ratings

For further information please contact sales@capxon.org

STANDARD RATINGS

V_R (V)	C_R (µF)	ø D (mm)	L (mm)	Typ. ESR +20°C ▪ 120Hz (mΩ)	Max. ESR +20°C ▪ 120Hz (mΩ)	I_R ▪ Max. Ripple Current +105°C ▪ 120Hz (mA rms)	CapXon Part Number
35	15000	30	40	20	27	3690	HP153M035O400A □□
	15000	35	35	20	27	3750	HP153M035P350A □□
	18000	25	50	17	22	3820	HP183M035N500A □□
	18000	30	40	17	22	3950	HP183M035O400A □□
	18000	35	35	17	22	4120	HP183M035P350A □□
	22000	30	45	14	18	4380	HP223M035O450A □□
	22000	35	40	14	18	4780	HP223M035P400A □□
	27000	30	50	13	17	4860	HP273M035O500A □□
	27000	35	45	13	17	5120	HP273M035P450A □□
	33000	35	50	11	14	5900	HP333M035P500A □□
50	1000	22	25	210	270	840	HP102M050M250A □□
	1500	22	25	140	180	1270	HP152M050M250A □□
	1800	22	25	120	150	1350	HP182M050M250A □□
	2200	22	25	92	120	1480	HP222M050M250A □□
	2700	22	25	76	98	1680	HP272M050M250A □□
	3300	22	30	62	80	1750	HP332M050M300A □□
	3300	25	25	62	80	1870	HP332M050N250A □□
	3900	22	30	52	68	2120	HP392M050M300A □□
	3900	25	25	52	68	2210	HP392M050N250A □□
	4700	22	35	43	56	2250	HP472M050M350A □□
	4700	25	30	43	56	2310	HP472M050N300A □□
	4700	30	25	43	56	2330	HP472M050O250A □□
	5600	22	40	36	47	2490	HP562M050M400A □□
	5600	25	35	36	47	2760	HP562M050N350A □□
	5600	30	30	36	47	2850	HP562M050O300A □□
	6800	22	50	30	39	3100	HP682M050M500A □□
	6800	25	40	30	39	3050	HP682M050N400A □□
	6800	30	35	30	39	3340	HP682M050O350A □□
	6800	35	30	30	39	3420	HP682M050P300A □□
	8200	25	45	25	32	3480	HP822M050N450A □□
	8200	30	35	25	32	3510	HP822M050O350A □□
	8200	35	30	25	32	3600	HP822M050P300A □□
	10000	25	50	20	27	3910	HP103M050N500A □□
	10000	30	40	20	27	3980	HP103M050O400A □□
	10000	35	30	20	27	4050	HP103M050P300A □□
	12000	30	45	26	33	4310	HP123M050O450A □□
	12000	35	35	26	33	4380	HP123M050P350A □□
	15000	35	50	20	27	4800	HP153M050P500A □□
	18000	35	50	17	22	5300	HP183M050P500A □□
	22000	35	60	14	18	5500	HP223M050P600A □□
63	680	22	25	300	390	700	HP681M063M250A □□
	1000	22	25	210	270	1000	HP102M063M250A □□
	1200	22	25	170	220	1210	HP122M063M250A □□
	1500	22	25	140	180	1360	HP152M063M250A □□

□□: See description at end of standard ratings

For further information please contact sales@capxon.org

STANDARD RATINGS

V_R (V)	C_R (µF)	ø D (mm)	L (mm)	Typ. ESR +20°C ▪ 120Hz (mΩ)	Max. ESR +20°C ▪ 120Hz (mΩ)	I_R ▪ Max. Ripple Current +105°C ▪ 120Hz (mA rms)	CapXon Part Number
63	1800	22	30	120	150	1410	HP182M063M300A □□
	1800	25	25	120	150	1460	HP182M063N250A □□
	2200	22	30	92	120	1540	HP222M063M300A □□
	2200	25	25	92	120	1610	HP222M063N250A □□
	2700	22	35	76	98	2020	HP272M063M350A □□
	2700	25	30	76	98	2050	HP272M063N300A □□
	2700	30	25	76	98	2100	HP272M063O250A □□
	3300	22	40	62	80	2120	HP332M063M400A □□
	3300	25	35	62	80	2200	HP332M063N350A □□
	3300	30	25	62	80	2250	HP332M063O250A □□
	3300	35	25	62	80	2320	HP332M063P250A □□
	3900	22	40	52	68	2340	HP392M063M400A □□
	3900	25	35	52	68	2420	HP392M063N350A □□
	3900	30	25	52	68	2430	HP392M063O250A □□
	4700	22	45	43	56	2590	HP472M063M450A □□
	4700	25	40	43	56	2650	HP472M063N400A □□
	4700	30	30	43	56	2710	HP472M063O300A □□
	5600	25	45	36	47	2930	HP562M063N450A □□
	5600	30	35	36	47	3050	HP562M063O350A □□
	5600	35	30	36	47	3090	HP562M063P300A □□
	6800	30	40	30	39	3720	HP682M063O400A □□
	6800	35	35	30	39	3780	HP682M063P350A □□
	8200	30	40	25	32	3820	HP822M063O400A □□
	8200	35	35	25	32	3920	HP822M063P350A □□
	10000	30	45	20	27	4050	HP103M063O450A □□
	10000	35	40	20	27	4100	HP103M063P400A □□
	12000	35	45	21	28	4760	HP123M063P450A □□
	15000	35	50	17	22	5400	HP153M063P500A □□
80	680	22	25	220	290	750	HP681M080M250A □□
	820	22	25	180	240	1110	HP821M080M250A □□
	1000	22	25	150	200	1220	HP102M080M250A □□
	1200	22	30	130	170	1320	HP122M080M300A □□
	1200	25	25	130	170	1390	HP122M080N250A □□
	1500	22	30	100	130	1590	HP152M080M300A □□
	1500	25	25	100	130	1600	HP152M080N250A □□
	1800	22	35	85	110	1710	HP182M080M350A □□
	1800	25	30	85	110	1750	HP182M080N300A □□
	1800	30	25	85	110	1950	HP182M080O250A □□
	2200	22	40	70	90	2120	HP222M080M400A □□
	2200	25	30	70	90	2050	HP222M080N300A □□
	2700	22	45	57	74	2410	HP272M080M450A □□
	2700	25	40	57	74	2450	HP272M080N400A □□
	2700	30	30	57	74	2490	HP272M080O300A □□
	3300	25	45	46	60	2600	HP332M080N450A □□

□□: See description at end of standard ratings

For further information please contact sales@capxon.org

STANDARD RATINGS

V_R (V)	C_R (µF)	ø D (mm)	L (mm)	Typ. ESR +20°C ▪ 120Hz (mΩ)	Max. ESR +20°C ▪ 120Hz (mΩ)	I_R ▪ Max. Ripple Current +105°C ▪ 120Hz (mA rms)	CapXon Part Number
80	3300	30	35	46	60	2640	HP332M080O350A □□
	3300	35	25	46	60	2620	HP332M080P250A □□
	3900	30	35	39	51	2950	HP392M080O350A □□
	3900	35	30	39	51	3050	HP392M080P300A □□
	4700	30	45	33	42	3210	HP472M080O450A □□
	4700	35	30	33	42	3450	HP472M080P300A □□
	4700	35	35	33	42	3510	HP472M080P350A □□
	5600	30	45	27	36	3550	HP562M080O450A □□
	5600	35	35	27	36	3650	HP562M080P350A □□
	6800	30	50	23	29	3720	HP682M080O500A □□
	6800	35	45	23	29	3900	HP682M080P450A □□
	8200	35	50	19	24	4300	HP822M080P500A □□
	10000	35	50	15	20	4400	HP103M080P500A □□
100	330	22	25	460	600	550	HP331M100M250A □□
	470	22	25	320	420	790	HP471M100M250A □□
	560	22	25	280	360	1060	HP561M100M250A □□
	680	22	25	220	290	1160	HP681M100M250A □□
	680	22	30	220	290	1180	HP681M100M300A □□
	680	25	25	220	290	1200	HP681M100N250A □□
	680	30	25	220	290	1250	HP681M100O250A □□
	820	22	25	180	240	1410	HP821M100M250A □□
	820	22	30	180	240	1460	HP821M100M300A □□
	820	25	25	180	240	1510	HP821M100N250A □□
	820	30	25	180	240	1550	HP821M100O250A □□
	1000	22	30	150	200	1710	HP102M100M300A □□
	1000	25	30	150	200	1770	HP102M100N300A □□
	1000	25	35	150	200	1800	HP102M100N350A □□
	1000	30	25	150	200	1810	HP102M100O250A □□
	1200	22	30	130	170	1830	HP122M100M300A □□
	1200	25	25	130	170	1850	HP122M100N250A □□
	1200	25	35	130	170	1940	HP122M100N350A □□
	1200	30	25	130	170	1950	HP122M100O250A □□
	1500	22	35	100	130	2110	HP152M100M350A □□
	1500	25	30	100	130	2150	HP152M100N300A □□
	1500	25	35	100	130	2190	HP152M100N350A □□
	1500	30	25	100	130	2200	HP152M100O250A □□
	1500	35	25	100	130	2260	HP152M100P250A □□
	1800	22	40	85	110	2310	HP182M100M400A □□
	1800	25	35	85	110	2320	HP182M100N350A □□
	1800	25	40	85	110	2380	HP182M100N400A □□
	1800	30	25	85	110	2330	HP182M100O250A □□
	1800	30	30	85	110	2360	HP182M100O300A □□
	1800	35	25	85	110	2400	HP182M100P250A □□
	2200	22	45	70	90	2620	HP222M100M450A □□

□□: See description at end of standard ratings

For further information please contact sales@capxon.org

STANDARD RATINGS

V_R (V)	C_R (µF)	ø D (mm)	L (mm)	Typ. ESR +20°C ▪ 120Hz (mΩ)	Max. ESR +20°C ▪ 120Hz (mΩ)	I_R ▪ Max. Ripple Current +105°C ▪ 120Hz (mA rms)	CapXon Part Number
100	2200	25	40	70	90	2650	HP222M100N400A □□
	2200	30	35	70	90	2750	HP222M100O350A □□
	2200	35	25	70	90	2700	HP222M100P250A □□
	2700	25	45	57	74	2910	HP272M100N450A □□
	2700	30	35	57	74	2930	HP272M100O350A □□
	2700	35	35	57	74	3250	HP272M100P350A □□
	3300	25	50	46	60	3310	HP332M100N500A □□
	3300	30	40	46	60	3370	HP332M100O400A □□
	3300	35	35	46	60	3450	HP332M100P350A □□
	3300	35	40	46	60	3560	HP332M100P400A □□
	3900	30	45	39	51	3680	HP392M100O450A □□
	3900	35	35	39	51	3700	HP392M100P350A □□
	4700	30	50	33	42	3820	HP472M100O500A □□
	4700	35	40	33	42	3840	HP472M100P400A □□
	4700	35	50	33	42	3970	HP472M100P500A □□
	5600	35	45	27	36	4110	HP562M100P450A □□
	6800	35	50	23	29	4510	HP682M100P500A □□
	8200	40	60	19	24	4950	HP822M100Q600A □□
	10000	40	60	15	20	5240	HP103M100Q600A □□
160	220	22	25	500	900	420	HP221M160M250A □□
	270	22	25	410	740	950	HP271M160M250A □□
	330	22	25	330	600	1110	HP331M160M250A □□
	330	22	30	330	600	1120	HP331M160M300A □□
	330	25	25	330	600	1130	HP331M160N250A □□
	390	22	25	280	510	1150	HP391M160M250A □□
	390	22	30	280	510	1220	HP391M160M300A □□
	390	25	25	280	510	1250	HP391M160N250A □□
	470	22	25	230	420	1410	HP471M160M250A □□
	470	22	30	230	420	1450	HP471M160M300A □□
	470	25	25	230	420	1500	HP471M160N250A □□
	560	22	25	200	360	1620	HP561M160M250A □□
	560	25	30	200	360	1750	HP561M160N300A □□
	680	22	30	160	290	1840	HP681M160M300A □□
	680	25	25	160	290	1860	HP681M160N250A □□
	680	30	25	160	290	2010	HP681M160O250A □□
	820	22	35	130	240	2000	HP821M160M350A □□
	820	25	30	130	240	2010	HP821M160N300A □□
	820	25	45	130	240	2200	HP821M160N450A □□
	820	30	25	130	240	2050	HP821M160O250A □□
	820	30	30	130	240	2100	HP821M160O300A □□
	1000	22	40	110	200	2340	HP102M160M400A □□
	1000	22	50	110	200	2410	HP102M160M500A □□
	1000	25	35	110	200	2360	HP102M160N350A □□
	1000	25	45	110	200	2470	HP102M160N450A □□

□□: See description at end of standard ratings

For further information please contact sales@capxon.org

STANDARD RATINGS

V_R (V)	C_R (µF)	ø D (mm)	L (mm)	Typ. ESR +20°C ▪ 120Hz (mΩ)	Max. ESR +20°C ▪ 120Hz (mΩ)	I_R ▪ Max. Ripple Current +105°C ▪ 120Hz (mA rms)	CapXon Part Number
160	1000	30	25	110	200	2060	HP102M160O250A □□
	1000	30	35	110	200	2470	HP102M160O350A □□
	1200	22	45	94	170	2620	HP122M160M450A □□
	1200	25	35	94	170	2610	HP122M160N350A □□
	1200	30	30	94	170	2660	HP122M160O300A □□
	1200	35	25	94	170	2700	HP122M160P250A □□
	1500	25	40	72	130	2830	HP152M160N400A □□
	1500	30	35	72	130	2890	HP152M160O350A □□
	1500	35	25	72	130	2880	HP152M160P250A □□
	1500	35	30	72	130	2960	HP152M160P300A □□
	1800	25	50	61	110	3250	HP182M160N500A □□
	1800	30	35	61	110	3200	HP182M160O350A □□
	1800	35	30	61	110	3250	HP182M160P300A □□
	2200	30	45	50	90	3260	HP222M160O450A □□
	2200	35	35	50	90	3320	HP222M160P350A □□
	2700	30	50	41	74	3670	HP272M160O500A □□
	2700	35	40	41	74	3680	HP272M160P400A □□
	3300	35	45	33	60	3710	HP332M160P450A □□
180	270	22	25	410	740	980	HP271M180M250A □□
	330	22	25	330	600	1140	HP331M180M250A □□
	390	22	25	280	510	1310	HP391M180M250A □□
	470	22	25	230	420	1460	HP471M180M250A □□
	470	22	30	230	420	1500	HP471M180M300A □□
	560	22	30	200	360	1670	HP561M180M300A □□
	560	25	25	200	360	1690	HP561M180N250A □□
	680	22	35	160	290	1880	HP681M180M350A □□
	680	25	30	160	290	1900	HP681M180N300A □□
	820	22	40	130	240	2120	HP821M180M400A □□
	820	25	30	130	240	2120	HP821M180N300A □□
	820	30	25	130	240	2150	HP821M180O250A □□
	1000	22	45	110	200	2390	HP102M180M450A □□
	1000	25	35	110	200	2390	HP102M180N350A □□
	1000	30	25	110	200	2360	HP102M180O250A □□
	1000	35	25	110	200	2470	HP102M180P250A □□
	1200	22	50	94	170	2700	HP122M180M500A □□
	1200	25	40	94	170	2700	HP122M180N400A □□
	1200	30	35	94	170	2750	HP122M180O350A □□
	1500	25	50	72	130	3000	HP152M180N500A □□
	1500	30	40	72	130	3050	HP152M180O400A □□
	1500	35	30	72	130	3070	HP152M180P300A □□
	1800	30	45	61	110	3200	HP182M180O450A □□
	1800	35	35	61	110	3250	HP182M180P350A □□
	2200	30	50	50	90	3330	HP222M180O500A □□
	2200	35	40	50	90	3350	HP222M180P400A □□

□□: See description at end of standard ratings

For further information please contact sales@capxon.org

STANDARD RATINGS

V_R (V)	C_R (µF)	ø D (mm)	L (mm)	Typ. ESR +20°C ▪ 120Hz (mΩ)	Max. ESR +20°C ▪ 120Hz (mΩ)	I_R ▪ Max. Ripple Current +105°C ▪ 120Hz (mA rms)	CapXon Part Number
180	2700	35	45	41	74	3690	HP272M180P450A □□
	3300	35	50	33	60	3720	HP332M180P500A □□
200	100	22	20	1110	1990	520	HP101M200M200A □□
	120	22	20	920	1660	530	HP121M200M200A □□
	150	22	20	740	1330	700	HP151M200M200A □□
	150	22	25	740	1330	720	HP151M200M250A □□
	150	25	20	740	1330	720	HP151M200N200A □□
	150	25	25	740	1330	730	HP151M200N250A □□
	180	22	25	620	1110	840	HP181M200M250A □□
	180	25	20	620	1110	850	HP181M200N200A □□
	180	30	20	620	1110	870	HP181M200O200A □□
	220	22	25	500	900	960	HP221M200M250A □□
	220	25	20	500	900	960	HP221M200N200A □□
	220	25	25	500	900	1140	HP221M200N250A □□
	220	30	20	500	900	1140	HP221M200O200A □□
	270	22	25	410	740	1100	HP271M200M250A □□
	270	22	30	410	740	1200	HP271M200M300A □□
	270	25	25	410	740	1200	HP271M200N250A □□
	270	30	20	410	740	1200	HP271M200O200A □□
	270	30	25	410	740	1250	HP271M200O250A □□
	330	22	25	330	600	1150	HP331M200M250A □□
	330	22	30	330	600	1220	HP331M200M300A □□
	330	25	25	330	600	1230	HP331M200N250A □□
	330	25	30	330	600	1300	HP331M200N300A □□
	330	30	25	330	600	1300	HP331M200O250A □□
	330	35	20	330	600	1270	HP331M200P200A □□
	390	22	25	280	510	1310	HP391M200M250A □□
	390	22	30	280	510	1370	HP391M200M300A □□
	390	25	25	280	510	1370	HP391M200N250A □□
	390	25	30	280	510	1450	HP391M200N300A □□
	390	30	25	280	510	1450	HP391M200O250A □□
	470	22	30	230	420	1510	HP471M200M300A □□
	470	22	35	230	420	1600	HP471M200M350A □□
	470	25	30	230	420	1600	HP471M200N300A □□
	470	25	35	230	420	1650	HP471M200N350A □□
	470	30	25	230	420	1650	HP471M200O250A □□
	560	22	30	200	360	1670	HP561M200M300A □□
	560	22	35	200	360	1710	HP561M200M350A □□
	560	25	30	200	360	1710	HP561M200N300A □□
	560	25	35	200	360	1800	HP561M200N350A □□
	560	30	25	200	360	1750	HP561M200O250A □□
	560	30	30	200	360	1800	HP561M200O300A □□
	560	35	25	200	360	1760	HP561M200P250A □□
	680	22	35	160	290	1890	HP681M200M350A □□

□□: See description at end of standard ratings

For further information please contact sales@capxon.org

STANDARD RATINGS

V_R (V)	C_R (µF)	ø D (mm)	L (mm)	Typ. ESR +20°C ▪ 120Hz (mΩ)	Max. ESR +20°C ▪ 120Hz (mΩ)	I_R ▪ Max. Ripple Current +105°C ▪ 120Hz (mA rms)	CapXon Part Number
200	680	22	40	160	290	2000	HP681M200M400A □□
	680	25	30	160	290	2000	HP681M200N300A □□
	680	25	35	160	290	2150	HP681M200N350A □□
	680	30	30	160	290	2150	HP681M200O300A □□
	680	35	25	160	290	2150	HP681M200P250A □□
	820	22	40	130	240	2130	HP821M200M400A □□
	820	22	45	130	240	2250	HP821M200M450A □□
	820	25	35	130	240	2250	HP821M200N350A □□
	820	25	40	130	240	2400	HP821M200N400A □□
	820	30	30	130	240	2400	HP821M200O300A □□
	820	35	25	130	240	2400	HP821M200P250A □□
	820	35	30	130	240	2490	HP821M200P300A □□
	1000	22	50	110	200	2450	HP102M200M500A □□
	1000	25	40	110	200	2430	HP102M200N400A □□
	1000	25	45	110	200	2560	HP102M200N450A □□
	1000	30	30	110	200	2450	HP102M200O300A □□
	1000	30	35	110	200	2580	HP102M200O350A □□
	1000	35	25	110	200	2470	HP102M200P250A □□
	1000	35	30	110	200	2580	HP102M200P300A □□
	1200	25	45	94	170	2660	HP122M200N450A □□
	1200	25	50	94	170	2780	HP122M200N500A □□
	1200	30	35	94	170	2660	HP122M200O350A □□
	1200	30	40	94	170	2800	HP122M200O400A □□
	1200	35	25	94	170	2700	HP122M200P250A □□
	1200	35	30	94	170	2830	HP122M200P300A □□
	1500	25	50	72	130	2970	HP152M200N500A □□
	1500	30	40	72	130	3060	HP152M200O400A □□
	1500	35	30	72	130	3080	HP152M200P300A □□
	1500	35	45	72	130	3200	HP152M200P450A □□
	1800	30	45	61	110	3260	HP182M200O450A □□
	1800	35	35	61	110	3260	HP182M200P350A □□
	1800	35	40	61	110	3370	HP182M200P400A □□
	2200	30	50	50	90	3510	HP222M200O500A □□
	2200	35	40	50	90	3510	HP222M200P400A □□
	2200	35	45	50	90	3630	HP222M200P450A □□
	2700	35	45	41	74	3700	HP272M200P450A □□
	2700	35	50	41	74	3830	HP272M200P500A □□
220	150	22	25	740	1330	730	HP151M220M250A □□
	180	22	25	620	1110	850	HP181M220M250A □□
	180	25	25	620	1110	900	HP181M220N250A □□
	220	22	25	500	900	970	HP221M220M250A □□
	220	25	25	500	900	1050	HP221M220N250A □□
	220	30	20	500	900	1140	HP221M220O200A □□
	270	22	25	410	740	1110	HP271M220M250A □□

□□: See description at end of standard ratings

For further information please contact sales@capxon.org

STANDARD RATINGS

V_R (V)	C_R (µF)	ø D (mm)	L (mm)	Typ. ESR +20°C ▪ 120Hz (mΩ)	Max. ESR +20°C ▪ 120Hz (mΩ)	I_R ▪ Max. Ripple Current +105°C ▪ 120Hz (mA rms)	CapXon Part Number
220	270	25	25	410	740	1230	HP271M220N250A □□
	330	22	35	330	600	1360	HP331M220M350A □□
	330	25	25	330	600	1360	HP331M220N250A □□
	330	30	25	330	600	1470	HP331M220O250A □□
	390	22	35	280	510	1480	HP391M220M350A □□
	390	25	30	280	510	1480	HP391M220N300A □□
	390	30	25	280	510	1450	HP391M220O250A □□
	470	22	35	230	420	1530	HP471M220M350A □□
	470	25	30	230	420	1540	HP471M220N300A □□
	470	30	25	230	420	1560	HP471M220O250A □□
	560	22	40	200	360	1690	HP561M220M400A □□
	560	25	35	200	360	1730	HP561M220N350A □□
	560	30	30	200	360	1730	HP561M220O300A □□
	560	35	25	200	360	1730	HP561M220P250A □□
	680	22	45	160	290	1910	HP681M220M450A □□
	680	25	40	160	290	1930	HP681M220N400A □□
	680	30	35	160	290	2050	HP681M220O350A □□
	680	35	30	160	290	2060	HP681M220P300A □□
	820	22	50	130	240	2170	HP821M220M500A □□
	820	25	40	130	240	2170	HP821M220N400A □□
	820	30	35	130	240	2180	HP821M220O350A □□
	820	35	30	130	240	2200	HP821M220P300A □□
	1000	25	45	110	200	2460	HP102M220N450A □□
	1000	30	35	110	200	2490	HP102M220O350A □□
	1000	35	30	110	200	2510	HP102M220P300A □□
	1200	25	50	94	170	2790	HP122M220N500A □□
	1200	30	40	94	170	2800	HP122M220O400A □□
	1200	35	35	94	170	2840	HP122M220P350A □□
	1500	30	45	72	130	3070	HP152M220O450A □□
	1500	35	40	72	130	3090	HP152M220P400A □□
	1800	30	50	61	110	3270	HP182M220O500A □□
	1800	35	45	61	110	3270	HP182M220P450A □□
	2200	35	50	50	90	3540	HP222M220P500A □□
250	68	22	25	1630	2930	380	HP680M250M250A □□
	82	22	25	1350	2430	480	HP820M250M250A □□
	100	22	25	1110	1990	530	HP101M250M250A □□
	100	25	25	1110	1990	650	HP101M250N250A □□
	120	22	25	920	1660	750	HP121M250M250A □□
	150	22	25	740	1330	780	HP151M250M250A □□
	150	25	25	740	1330	850	HP151M250N250A □□
	150	30	25	740	1330	890	HP151M250O250A □□
	180	22	25	620	1110	890	HP181M250M250A □□
	180	30	25	620	1110	950	HP181M250O250A □□
	220	22	25	500	900	1010	HP221M250M250A □□

□□: See description at end of standard ratings

For further information please contact sales@capxon.org

STANDARD RATINGS

V_R (V)	C_R (µF)	ø D (mm)	L (mm)	Typ. ESR +20°C ▪ 120Hz (mΩ)	Max. ESR +20°C ▪ 120Hz (mΩ)	I_R ▪ Max. Ripple Current +105°C ▪ 120Hz (mA rms)	CapXon Part Number
250	220	22	30	500	900	1070	HP221M250M300A □□
	220	25	25	500	900	1070	HP221M250N250A □□
	220	30	25	500	900	1150	HP221M250O250A □□
	270	22	25	410	740	1150	HP271M250M250A □□
	270	22	30	410	740	1200	HP271M250M300A □□
	270	25	25	410	740	1200	HP271M250N250A □□
	270	25	30	410	740	1250	HP271M250N300A □□
	270	30	25	410	740	1250	HP271M250O250A □□
	270	30	30	410	740	1320	HP271M250O300A □□
	330	22	35	330	600	1260	HP331M250M350A □□
	330	25	25	330	600	1270	HP331M250N250A □□
	330	25	30	330	600	1380	HP331M250N300A □□
	330	30	25	330	600	1380	HP331M250O250A □□
	330	35	25	330	600	1450	HP331M250P250A □□
	390	22	35	280	510	1420	HP391M250M350A □□
	390	25	30	280	510	1450	HP391M250N300A □□
	390	30	25	280	510	1450	HP391M250O250A □□
	390	30	30	280	510	1540	HP391M250O300A □□
	390	35	25	280	510	1560	HP391M250P250A □□
	470	22	35	230	420	1570	HP471M250M350A □□
	470	22	40	230	420	1700	HP471M250M400A □□
	470	25	30	230	420	1670	HP471M250N300A □□
	470	25	35	230	420	1720	HP471M250N350A □□
	470	30	25	230	420	1720	HP471M250O250A □□
	470	30	30	230	420	1790	HP471M250O300A □□
	470	35	25	230	420	1790	HP471M250P250A □□
	560	22	40	200	360	1870	HP561M250M400A □□
	560	22	45	200	360	1970	HP561M250M450A □□
	560	25	35	200	360	1880	HP561M250N350A □□
	560	25	40	200	360	1970	HP561M250N400A □□
	560	30	25	200	360	1880	HP561M250O250A □□
	560	30	30	200	360	1970	HP561M250O300A □□
	560	35	25	200	360	1980	HP561M250P250A □□
	560	35	30	200	360	2100	HP561M250P300A □□
	680	22	45	160	290	2150	HP681M250M450A □□
	680	25	40	160	290	2200	HP681M250N400A □□
	680	30	35	160	290	2240	HP681M250O350A □□
	680	35	30	160	290	2250	HP681M250P300A □□
	820	25	45	130	240	2560	HP821M250N450A □□
	820	30	35	130	240	2560	HP821M250O350A □□
	820	35	30	130	240	2570	HP821M250P300A □□
	1000	25	50	110	200	2850	HP102M250N500A □□
	1000	30	40	110	200	2850	HP102M250O400A □□
	1000	35	30	110	200	2860	HP102M250P300A □□

□□: See description at end of standard ratings

For further information please contact sales@capxon.org

STANDARD RATINGS

V_R (V)	C_R (µF)	ø D (mm)	L (mm)	Typ. ESR +20°C ▪ 120Hz (mΩ)	Max. ESR +20°C ▪ 120Hz (mΩ)	I_R ▪ Max. Ripple Current +105°C ▪ 120Hz (mA rms)	CapXon Part Number
250	1200	30	45	94	170	3200	HP122M250O450A □□
	1200	35	35	94	170	2250	HP122M250P350A □□
	1500	30	50	72	130	3830	HP152M250O500A □□
	1500	35	40	72	130	3910	HP152M250P400A □□
	1800	35	45	61	110	4300	HP182M250P450A □□
	1800	35	50	61	110	4560	HP182M250P500A □□
	1800	35	55	61	110	4880	HP182M250P550A □□
	2200	35	50	50	90	5000	HP222M250P500A □□
	2200	35	55	50	90	5190	HP222M250P550A □□
315	120	22	25	920	1660	760	HP121M315M250A □□
	150	22	25	740	1330	830	HP151M315M250A □□
	180	22	30	620	1110	920	HP181M315M300A □□
	220	22	30	500	900	1070	HP221M315M300A □□
	270	22	35	410	740	1210	HP271M315M350A □□
	270	25	30	410	740	1250	HP271M315N300A □□
	330	22	45	330	600	1280	HP331M315M450A □□
	330	25	35	330	600	1310	HP331M315N350A □□
	330	30	25	330	600	1280	HP331M315O250A □□
	390	22	45	280	510	1530	HP391M315M450A □□
	390	25	40	280	510	1550	HP391M315N400A □□
	390	30	30	280	510	1560	HP391M315O300A □□
	390	35	25	280	510	1570	HP391M315P250A □□
	470	25	45	230	420	1730	HP471M315N450A □□
	470	30	35	230	420	1800	HP471M315O350A □□
	470	35	25	230	420	1830	HP471M315P250A □□
	560	25	50	200	360	1940	HP561M315N500A □□
	560	30	40	200	360	1950	HP561M315O400A □□
	560	35	30	200	360	2030	HP561M315P300A □□
	680	30	45	160	290	2250	HP681M315O450A □□
	680	35	35	160	290	2260	HP681M315P350A □□
	820	30	50	130	240	2580	HP821M315O500A □□
	820	35	40	130	240	2580	HP821M315P400A □□
	1000	35	45	110	200	2870	HP102M315P450A □□
	1000	35	50	110	200	2880	HP102M315P500A □□
	1200	35	45	94	170	2920	HP122M315P450A □□
	1200	35	50	94	170	2950	HP122M315P500A □□
350	82	22	25	1350	2430	520	HP820M350M250A □□
	100	22	25	1110	1990	550	HP101M350M250A □□
	120	22	30	920	1660	770	HP121M350M300A □□
	150	22	30	740	1330	820	HP151M350M300A □□
	180	22	30	620	1110	900	HP181M350M300A □□
	180	25	30	620	1110	970	HP181M350N300A □□
	220	22	35	500	900	1080	HP221M350M350A □□
	220	25	30	500	900	1090	HP221M350N300A □□

□□: See description at end of standard ratings

For further information please contact sales@capxon.org

STANDARD RATINGS

V_R (V)	C_R (µF)	ø D (mm)	L (mm)	Typ. ESR +20°C ▪ 120Hz (mΩ)	Max. ESR +20°C ▪ 120Hz (mΩ)	I_R ▪ Max. Ripple Current +105°C ▪ 120Hz (mA rms)	CapXon Part Number
350	270	22	40	410	740	1220	HP271M350M400A □□
	270	25	35	410	740	1260	HP271M350N350A □□
	270	30	30	410	740	1270	HP271M350O300A □□
	330	22	45	330	600	1290	HP331M350M450A □□
	330	25	40	330	600	1320	HP331M350N400A □□
	330	30	30	330	600	1320	HP331M350O300A □□
	390	25	45	280	510	1560	HP391M350N450A □□
	390	30	35	280	510	1570	HP391M350O350A □□
	390	35	30	280	510	1560	HP391M350P300A □□
	470	25	45	230	420	1740	HP471M350N450A □□
	470	30	40	230	420	1810	HP471M350O400A □□
	470	35	35	230	420	1840	HP471M350P350A □□
	560	30	45	200	360	1960	HP561M350O450A □□
	560	35	40	200	360	2040	HP561M350P400A □□
	680	30	45	160	290	2260	HP681M350O450A □□
	680	35	40	160	290	2270	HP681M350P400A □□
	680	40	35	160	290	2280	HP681M350Q350A □□
	820	30	50	130	240	2270	HP821M350O500A □□
	820	35	45	130	240	2590	HP821M350P450A □□
	1000	35	50	110	200	2890	HP102M350P500A □□
	1000	40	45	110	200	2900	HP102M350Q450A □□
	1200	35	50	94	170	2870	HP122M350P500A □□
	1200	40	45	94	170	2870	HP122M350Q450A □□
400	56	22	20	1970	3550	460	HP560M400M200A □□
	68	22	20	1630	2930	510	HP680M400M200A □□
	82	22	25	1350	2430	640	HP820M400M250A □□
	82	25	25	1350	2430	690	HP820M400N250A □□
	100	22	25	1110	1990	690	HP101M400M250A □□
	100	25	25	1110	1990	750	HP101M400N250A □□
	120	22	25	920	1660	780	HP121M400M250A □□
	120	22	30	920	1660	830	HP121M400M300A □□
	120	25	25	920	1660	830	HP121M400N250A □□
	150	22	30	740	1330	860	HP151M400M300A □□
	150	25	25	740	1330	860	HP151M400N250A □□
	150	25	30	740	1330	900	HP151M400N300A □□
	150	30	25	740	1330	890	HP151M400O250A □□
	180	22	35	620	1110	1000	HP181M400M350A □□
	180	25	30	620	1110	1050	HP181M400N300A □□
	180	30	25	620	1110	1070	HP181M400O250A □□
	220	22	40	500	900	1090	HP221M400M400A □□
	220	25	30	500	900	1100	HP221M400N300A □□
	220	30	25	500	900	1100	HP221M400O250A □□
	220	30	30	500	900	1160	HP221M400O300A □□
	270	25	35	410	740	1260	HP271M400N350A □□

□□: See description at end of standard ratings

For further information please contact sales@capxon.org

STANDARD RATINGS

V_R (V)	C_R (µF)	ø D (mm)	L (mm)	Typ. ESR +20°C ▪ 120Hz (mΩ)	Max. ESR +20°C ▪ 120Hz (mΩ)	I_R ▪ Max. Ripple Current +105°C ▪ 120Hz (mA rms)	CapXon Part Number
400	270	30	30	410	740	1280	HP271M400O300A □□
	330	22	45	330	600	1460	HP331M400M450A □□
	330	25	40	330	600	1480	HP331M400N400A □□
	330	30	35	330	600	1520	HP331M400O350A □□
	330	35	30	330	600	1520	HP331M400P300A □□
	390	25	45	280	510	1690	HP391M400N450A □□
	390	30	40	280	510	1720	HP391M400O400A □□
	390	35	35	280	510	1740	HP391M400P350A □□
	470	25	50	230	420	1840	HP471M400N500A □□
	470	30	40	230	420	1920	HP471M400O400A □□
	470	35	35	230	420	1950	HP471M400P350A □□
	560	30	45	200	360	2320	HP561M400O450A □□
	560	35	40	200	360	2330	HP561M400P400A □□
	680	30	50	160	290	2680	HP681M400O500A □□
	680	35	45	160	290	2750	HP681M400P450A □□
	820	35	45	130	240	2920	HP821M400P450A □□
	820	35	50	130	240	2970	HP821M400P500A □□
	1000	35	50	110	200	3150	HP102M400P500A □□
	1200	35	60	94	170	3290	HP122M400P600A □□
	1200	40	50	94	170	3290	HP122M400Q500A □□
420	68	22	25	2170	3900	530	HP680M420M250A □□
	82	22	25	1790	3230	650	HP820M420M250A □□
	82	25	25	1790	3230	700	HP820M420N250A □□
	100	22	25	1470	2650	710	HP101M420M250A □□
	100	22	30	1470	2650	750	HP101M420M300A □□
	100	25	25	1470	2650	750	HP101M420N250A □□
	120	22	25	1230	2210	790	HP121M420M250A □□
	120	22	30	1230	2210	830	HP121M420M300A □□
	120	25	25	1230	2210	840	HP121M420N250A □□
	120	25	30	1230	2210	890	HP121M420N300A □□
	150	22	30	980	1770	870	HP151M420M300A □□
	150	22	35	980	1770	930	HP151M420M350A □□
	150	25	30	980	1770	930	HP151M420N300A □□
	150	30	25	980	1770	930	HP151M420O250A □□
	180	22	35	820	1470	960	HP181M420M350A □□
	180	22	40	820	1470	1020	HP181M420M400A □□
	180	25	30	820	1470	1020	HP181M420N300A □□
	180	30	25	820	1470	1000	HP181M420O250A □□
	220	22	40	670	1210	1130	HP221M420M400A □□
	220	22	45	670	1210	1190	HP221M420M450A □□
	220	25	35	670	1210	1150	HP221M420N350A □□
	220	30	25	670	1210	1160	HP221M420O250A □□
	220	30	30	670	1210	1210	HP221M420O300A □□
	220	35	25	670	1210	1230	HP221M420P250A □□

□□: See description at end of standard ratings

For further information please contact sales@capxon.org

STANDARD RATINGS

V_R (V)	C_R (µF)	ø D (mm)	L (mm)	Typ. ESR +20°C ▪ 120Hz (mΩ)	Max. ESR +20°C ▪ 120Hz (mΩ)	I_R ▪ Max. Ripple Current +105°C ▪ 120Hz (mA rms)	CapXon Part Number
420	270	22	50	540	980	1270	HP271M420M500A □□
	270	25	40	540	980	1260	HP271M420N400A □□
	270	30	30	540	980	1280	HP271M420O300A □□
	270	35	25	540	980	1300	HP271M420P250A □□
	330	22	50	440	800	1410	HP331M420M500A □□
	330	25	45	440	800	1490	HP331M420N450A □□
	330	30	35	440	800	1490	HP331M420O350A □□
	330	30	40	440	800	1540	HP331M420O400A □□
	330	35	30	440	800	1540	HP331M420P300A □□
	330	35	35	440	800	1670	HP331M420P350A □□
	390	22	55	380	680	1620	HP391M420M550A □□
	390	25	50	380	680	1700	HP391M420N500A □□
	390	30	40	380	680	1720	HP391M420O400A □□
	390	35	35	380	680	1750	HP391M420P350A □□
	470	25	50	310	560	1850	HP471M420N500A □□
	470	30	45	310	560	1900	HP471M420O450A □□
	470	35	35	310	560	1900	HP471M420P350A □□
	470	35	40	310	560	1970	HP471M420P400A □□
	560	30	50	260	470	2230	HP561M420O500A □□
	560	35	40	260	470	2240	HP561M420P400A □□
	560	35	45	260	470	2320	HP561M420P450A □□
	680	35	45	220	390	2760	HP681M420P450A □□
	680	35	50	220	390	2770	HP681M420P500A □□
	820	35	55	180	320	2980	HP821M420P550A □□
	1000	35	60	150	270	3150	HP102M420P600A □□
	1000	40	50	150	270	3250	HP102M420Q500A □□
450	68	22	25	2170	3900	530	HP680M450M250A □□
	82	22	25	1790	3230	660	HP820M450M250A □□
	82	22	30	1790	3230	710	HP820M450M300A □□
	82	25	25	1790	3230	710	HP820M450N250A □□
	100	22	25	1470	2650	720	HP101M450M250A □□
	100	22	30	1470	2650	750	HP101M450M300A □□
	100	25	25	1470	2650	750	HP101M450N250A □□
	100	25	30	1470	2650	820	HP101M450N300A □□
	100	30	25	1470	2650	830	HP101M450O250A □□
	120	22	30	1230	2210	820	HP121M450M300A □□
	120	22	35	1230	2210	860	HP121M450M350A □□
	120	25	25	1230	2210	820	HP121M450N250A □□
	120	25	30	1230	2210	860	HP121M450N300A □□
	120	30	25	1230	2210	860	HP121M450O250A □□
	120	35	25	1230	2210	950	HP121M450P250A □□
	150	22	30	980	1770	910	HP151M450M300A □□
	150	22	35	980	1770	930	HP151M450M350A □□
	150	22	40	980	1770	950	HP151M450M400A □□

□□: See description at end of standard ratings

For further information please contact sales@capxon.org

STANDARD RATINGS

V_R (V)	C_R (µF)	ø D (mm)	L (mm)	Typ. ESR +20°C ▪ 120Hz (mΩ)	Max. ESR +20°C ▪ 120Hz (mΩ)	I_R ▪ Max. Ripple Current +105°C ▪ 120Hz (mA rms)	CapXon Part Number
450	150	25	30	980	1770	940	HP151M450N300A □□
	150	25	35	980	1770	970	HP151M450N350A □□
	150	30	25	980	1770	980	HP151M450O250A □□
	150	30	30	980	1770	1060	HP151M450O300A □□
	150	35	25	980	1770	1080	HP151M450P250A □□
	180	22	35	820	1470	1020	HP181M450M350A □□
	180	22	40	820	1470	1050	HP181M450M400A □□
	180	25	30	820	1470	1050	HP181M450N300A □□
	180	25	35	820	1470	1100	HP181M450N350A □□
	180	30	25	820	1470	1100	HP181M450O250A □□
	180	30	30	820	1470	1190	HP181M450O300A □□
	180	35	25	820	1470	1200	HP181M450P250A □□
	180	35	30	820	1470	1280	HP181M450P300A □□
	220	22	40	670	1210	1120	HP221M450M400A □□
	220	22	45	670	1210	1200	HP221M450M450A □□
	220	25	35	670	1210	1200	HP221M450N350A □□
	220	25	40	670	1210	1250	HP221M450N400A □□
	220	30	25	670	1210	1170	HP221M450O250A □□
	220	30	30	670	1210	1250	HP221M450O300A □□
	220	35	25	670	1210	1240	HP221M450P250A □□
	220	35	30	670	1210	1330	HP221M450P300A □□
	270	22	50	540	980	1300	HP271M450M500A □□
	270	25	40	540	980	1300	HP271M450N400A □□
	270	30	30	540	980	1290	HP271M450O300A □□
	270	30	35	540	980	1420	HP271M450O350A □□
	270	35	25	540	980	1350	HP271M450P250A □□
	270	35	30	540	980	1420	HP271M450P300A □□
	330	25	50	440	800	1680	HP331M450N500A □□
	330	30	35	440	800	1540	HP331M450O350A □□
	330	30	40	440	800	1690	HP331M450O400A □□
	330	35	30	440	800	1700	HP331M450P300A □□
	330	35	35	440	800	1870	HP331M450P350A □□
	390	25	50	380	680	1710	HP391M450N500A □□
	390	30	40	380	680	1690	HP391M450O400A □□
	390	30	45	380	680	1900	HP391M450O450A □□
	390	35	35	380	680	1910	HP391M450P350A □□
	390	35	40	380	680	2070	HP391M450P400A □□
	470	30	45	310	560	1940	HP471M450O450A □□
	470	30	50	310	560	2230	HP471M450O500A □□
	470	35	35	310	560	1970	HP471M450P350A □□
	470	35	40	310	560	2100	HP471M450P400A □□
	470	35	45	310	560	2500	HP471M450P450A □□
	560	30	50	260	470	2440	HP561M450O500A □□
	560	35	40	260	470	2400	HP561M450P400A □□

□□: See description at end of standard ratings

For further information please contact sales@capxon.org

STANDARD RATINGS

V_R (V)	C_R (µF)	ø D (mm)	L (mm)	Typ. ESR +20°C ▪ 120Hz (mΩ)	Max. ESR +20°C ▪ 120Hz (mΩ)	I_R ▪ Max. Ripple Current +105°C ▪ 120Hz (mA rms)	CapXon Part Number
450	560	35	45	260	470	2500	HP561M450P450A □□
	560	35	50	260	470	2790	HP561M450P500A □□
	680	35	45	220	390	2770	HP681M450P450A □□
	680	35	50	220	390	2900	HP681M450P500A □□
	820	35	55	180	320	3080	HP821M450P550A □□
	820	35	60	180	320	3220	HP821M450P600A □□
	1000	35	65	150	270	3310	HP102M450P650A □□
	1000	40	60	150	270	3400	HP102M450Q600A □□
	1200	35	80	120	220	3620	HP122M450P800A □□
	1200	40	70	120	220	3670	HP122M450Q700A □□
500	47	22	25	3130	5640	420	HP470M500M250A □□
	56	22	30	2630	4740	500	HP560M500M300A □□
	56	25	25	2630	4740	510	HP560M500N250A □□
	68	22	30	2170	3900	550	HP680M500M300A □□
	68	25	25	2170	3900	550	HP680M500N250A □□
	82	22	35	1790	3230	730	HP820M500M350A □□
	82	25	30	1790	3230	750	HP820M500N300A □□
	82	30	25	1790	3230	760	HP820M500O250A □□
	100	22	40	1470	2650	900	HP101M500M400A □□
	100	22	45	1470	2650	940	HP101M500M450A □□
	100	25	35	1470	2650	920	HP101M500N350A □□
	100	30	25	1470	2650	930	HP101M500O250A □□
	100	30	30	1470	2650	960	HP101M500O300A □□
	120	22	50	1230	2210	940	HP121M500M500A □□
	120	25	35	1230	2210	930	HP121M500N350A □□
	120	25	40	1230	2210	940	HP121M500N400A □□
	120	30	30	1230	2210	940	HP121M500O300A □□
	120	35	25	1230	2210	940	HP121M500P250A □□
	150	22	50	980	1770	1100	HP151M500M500A □□
	150	25	40	980	1770	1100	HP151M500N400A □□
	150	30	35	980	1770	1130	HP151M500O350A □□
	150	35	25	980	1770	1000	HP151M500P250A □□
	150	35	30	980	1770	1140	HP151M500P300A □□
	180	25	50	820	1470	1390	HP181M500N500A □□
	180	30	35	820	1470	1310	HP181M500O350A □□
	180	30	40	820	1470	1400	HP181M500O400A □□
	180	35	30	820	1470	1410	HP181M500P300A □□
	220	25	55	670	1210	1620	HP221M500N550A □□
	220	30	40	670	1210	1590	HP221M500O400A □□
	220	30	45	670	1210	1630	HP221M500O450A □□
	220	35	35	670	1210	1650	HP221M500P350A □□
	270	30	50	540	980	1750	HP271M500O500A □□
	270	35	40	540	980	1760	HP271M500P400A □□
	330	30	55	440	800	2030	HP331M500O550A □□

□□: See description at end of standard ratings

For further information please contact sales@capxon.org

STANDARD RATINGS

V_R (V)	C_R (µF)	ø D (mm)	L (mm)	Typ. ESR +20°C ▪ 120Hz (mΩ)	Max. ESR +20°C ▪ 120Hz (mΩ)	I_R ▪ Max. Ripple Current +105°C ▪ 120Hz (mA rms)	CapXon Part Number
500	330	35	45	440	800	2050	HP331M500P450A [ ][ ]
	390	35	50	380	680	2470	HP391M500P500A [ ][ ]
	470	35	55	310	560	2630	HP471M500P550A [ ][ ]
	680	35	65	220	390	3190	HP681M500P650A [ ][ ]
	820	35	75	180	320	3850	HP821M500P750A [ ][ ]
	820	40	65	180	320	3850	HP821M500Q650A [ ][ ]
	1000	40	80	150	270	4700	HP102M500Q800A [ ][ ]
550	47	25	25	3130	5640	480	HP470M550N250A [ ][ ]
	56	25	30	2630	4740	550	HP560M550N300A [ ][ ]
	68	25	35	2170	3900	630	HP680M550N350A [ ][ ]
	68	30	25	2170	3900	650	HP680M550O250A [ ][ ]
	82	25	35	1790	3230	760	HP820M550N350A [ ][ ]
	82	30	30	1790	3230	770	HP820M550O300A [ ][ ]
	100	25	40	1470	2650	930	HP101M550N400A [ ][ ]
	100	30	35	1470	2650	940	HP101M550O350A [ ][ ]
	100	35	25	1470	2650	930	HP101M550P250A [ ][ ]
	120	25	50	1230	2210	960	HP121M550N500A [ ][ ]
	120	30	35	1230	2210	980	HP121M550O350A [ ][ ]
	120	35	30	1230	2210	1060	HP121M550P300A [ ][ ]
	150	25	55	980	1770	1130	HP151M550N550A [ ][ ]
	150	30	45	980	1770	1180	HP151M550O450A [ ][ ]
	150	35	35	980	1770	1220	HP151M550P350A [ ][ ]
	180	30	50	820	1470	1350	HP181M550O500A [ ][ ]
	180	35	40	820	1470	1380	HP181M550P400A [ ][ ]
	220	30	55	670	1210	1560	HP221M550O550A [ ][ ]
	220	35	45	670	1210	1580	HP221M550P450A [ ][ ]
	270	35	50	540	980	1800	HP271M550P500A [ ][ ]

[ ][ ][ ]: Enter **P6** for standard type ▪ 6mm pin length
[ ][ ][ ][ ]: Enter **Z6** for 3-pin type ▪ 6mm pin length
[ ][ ]: Enter **Y6** for multipin-type ▪ 6mm pin length
[ ][ ][ ]: Enter **P4** for standard type ▪ 4mm pin length
[ ][ ][ ][ ]: Enter **Z4** for 3-pin type ▪ 4mm pin length
[ ][ ]: Enter **Y4** for multipin type ▪ 4mm pin length

DIMENSIONS ▪ All dimensions in mm

2-pin version ▪ Standard type

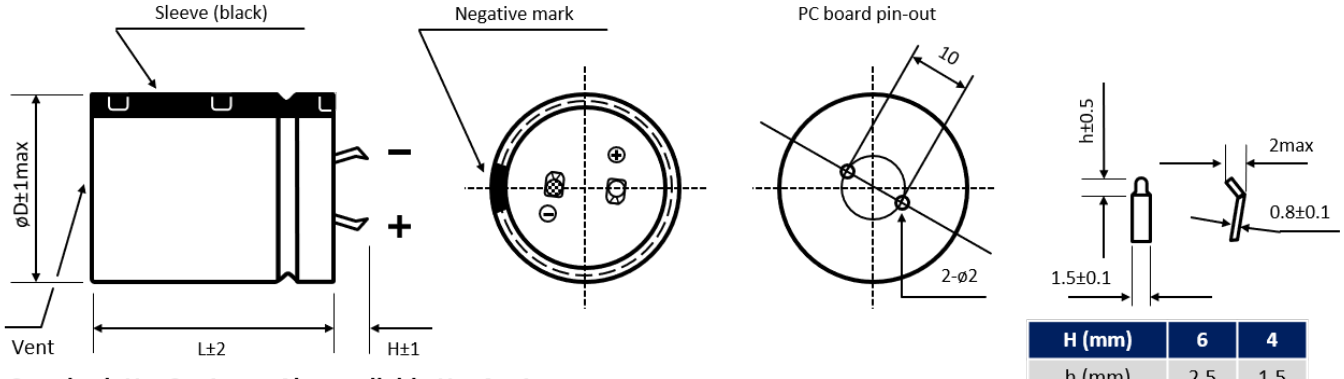

H (mm)	6	4
h (mm)	2.5	1.5

Standard: H = 6 ± 1mm. Also available H = 4 ± 1mm

For further information please contact sales@capxon.org

DIMENSIONS ▪ All dimensions in mm

3-pin version ▪ Polarity protection

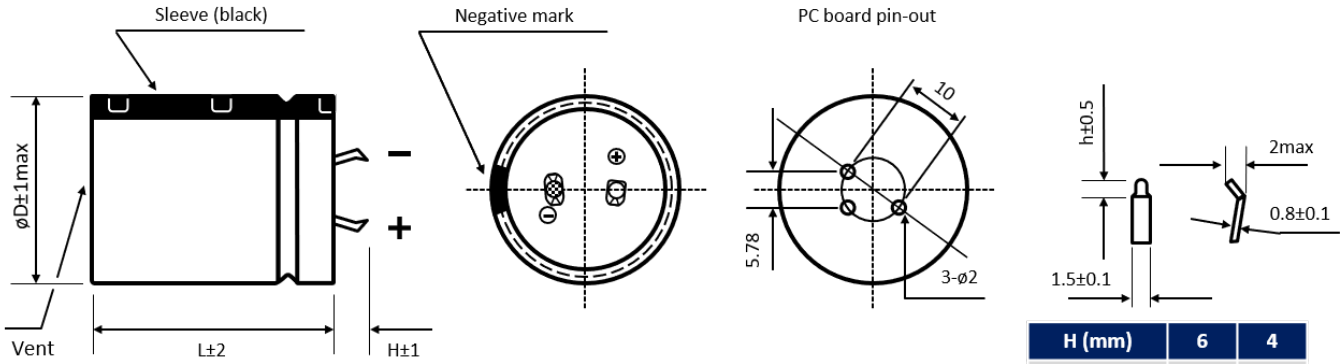

H (mm)	6	4
h (mm)	2.5	1.5

Standard: H = 4 ± 1mm. Also available H = 6 ± 1mm

Multipin version ▪ Diameter ø D ≥ 30 mm

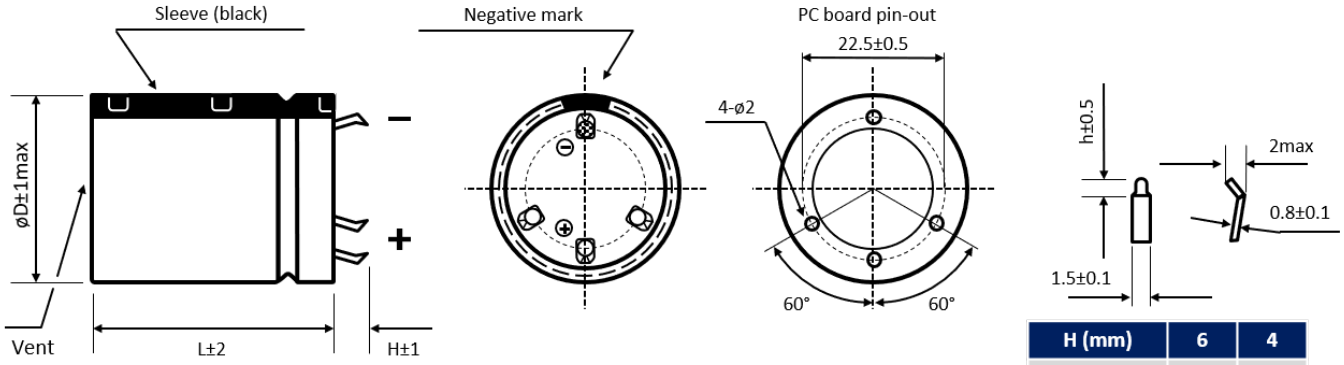

H (mm)	6	4
h (mm)	2.5	1.5

Standard: H = 6 ± 1mm. Also available H = 4 ± 1mm

Further possible terminal styles can be found in our packaging information liquid snap-in.

MULTIPLIER K_f for RIPPLE CURRENT vs. FREQUENCY

V_R (V) / Frequency (Hz)	50/60	100/120	300	1k	10k	50k - 100k
$6.3 \le V_R \le 100$	0.88	1	1.07	1.15	1.15	1.15
$160 \le V_R \le 250$	0.81	1	1.17	1.32	1.45	1.5
$315 \le V_R \le 550$	0.77	1	1.16	1.3	1.41	1.43

PRECAUTIONS, GUIDELINES AND PACKAGING INFORMATON

Unless otherwise agreed in individual specifications, all products are subject to our “General Precautions and Guidelines” as well as our “Packaging Information”. Please refer to the following pages in the table.

General Precautions and Guidelines	Packaging Information Liquid Snap-In
Page 837	Page 579

For further information please contact sales@capxon.org

USEFUL LIFE

$V_R \leq 100V$

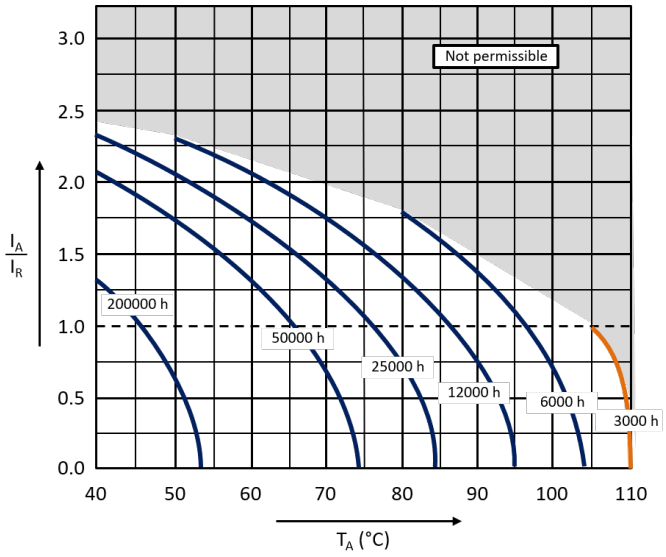

$V_R \geq 160V$

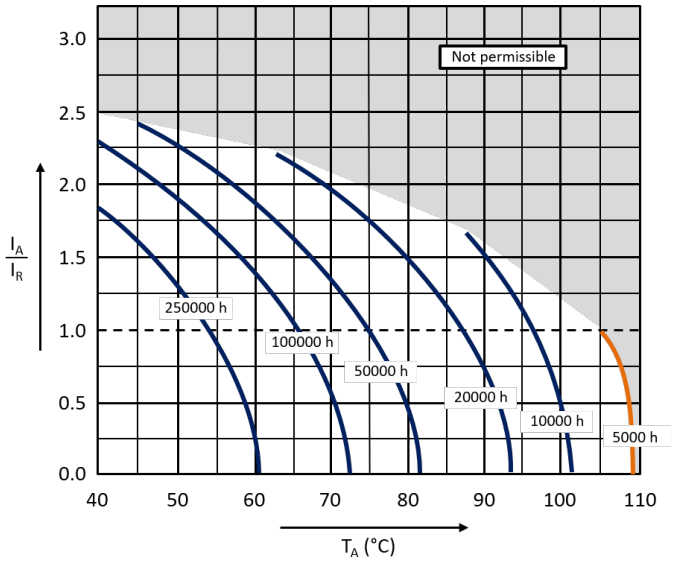

With: I_A: Application current
I_R: Rated ripple current (A RMS)
T_A: Application temperature of the capacitor

DISCLAIMER

All product related data (e.g. specification, statements and general information) are subject to change without any notice. It is necessary that the customer observes all product related technical / application information and handling instructions.

CapXon products are designed and manufactured according to severe quality and safety standards. Under no circumstance, CapXon warrants that any CapXon product is suitable for the purposes intended for your application, even CapXon knows the application. It is customer's duty and obligation to check and make sure that CapXon products are suitable for the purposes intended and select the correct and proper CapXon product. Customers are requested to perform a sufficient validation and reliability evaluation to assure needed safety level and reliability performance by suitable designs and to apply proper safeguards (e.g. redundancies, protective circuits).

Particular operating conditions (ambient temperature, ripple current, voltage, thermal resistance, etc.) as well as storage, production or assembly may affect the performance and the lifetime of the capacitor. Please consult CapXon for lifetime estimation, failure mode considerations or worst-case scenarios according to the product technology, product tolerances / deviations or change of the characteristics of the capacitor due to shipment, storage, handling, production and usage.

For aerospace or military application, life-saving, life-sustaining, safety critical applications or any application where failure may cause severe personal injury or death, please consult us before design-in the capacitor in your application.

Except for the written expressed warranties, CapXon does not impliedly, by assumption or whatever else, warrant, undertake, promise any other warranty or guaranty for any CapXon product.

For further information, please visit our website www.capxongroup.com or contact CapXon directly.

HT SERIES ▪ LONG LIFE, MULTI-PIN 105°C TYPE



KEY FEATURES

HIGH VOLTAGE LONG LIFE

- **ALUMINUM ELECTROLYTIC CAPACITOR** ▪ Snap-In (Multi-Pin) type
- Useful life: 105°C ▪ 5 000 hours
- Miniature dimensions
- High reliability
- Polarity-protected assembly

NOT FOR NEW DESIGNS

Recommendation HP series

HF Halogen Free

RoHS & REACH COMPLIANT

SPECIFICATIONS

Items		Performance Characteristics			
Operating Temperature Range		-40 ~ +105°C		-25 ~ +105°C	
Rated Voltage Range	V_R	160 ~ 350V DC		400 ~ 450V DC	
Surge Voltage	V_S	($V_R \le 315V$): $V_S = 1.15 \cdot V_R$		($V_R > 315V$): $V_S = 1.10 \cdot V_R$	
Capacitance Range	C_R	180 ~ 2700µF		82 ~ 1800µF	
Cap. Tolerance	ΔC	±20% (120Hz ▪ 20°C)			
Leakage Current (20°C ▪ V_R applied)	I_{LEAK}	≤ √3·C_R·V_R ▪ After 5 minutes [I_{LEAK} (µA) ; C_R (µF) ; V_R (V)]			
Dissipation Factor % (20°C ▪ 120Hz)	tanδ	V DC	160 ~ 400		450
		tanδ	15		20
Low Temperature Characteristics at 120Hz	Z ratio max.	V_R (V DC)	160 ~ 250	315 ~ 350	400 ~ 450
		Z-25°C/Z+20°C	4	8	8
		Z-40°C/Z+20°C	8	12	-

Lifetime Test		
Useful Life 105°C (V_R & I_R applied)	Test	**5 000 hours**
	△C/C_R	≤ ±20% of initial measured value
	tanδ	≤ 200% of initial specified value
	I_{Leak}	≤ the initial specified value
	Deviation Rate @ Useful Life: 10 000 FIT = 1%/1000h with 60% confidence level ▪ parts show higher drift as test criteria	
Endurance 105°C (V_R & I_R applied)	Test	**2 000 hours**
	△C/C_R	≤ ±15% of initial measured value
	tanδ	≤ 175% of initial specified value
	I_{Leak}	≤ the initial specified value
Shelf Life 105°C (V_R = 0)	Test	**1 000 hours**
	△C/C_R	≤ ±15% of initial measured value
	tanδ	≤ 175% of initial specified value
	I_{Leak}	≤ the initial specified value
	Before measurement: Restore capacitor to 20°C, apply V_R for 30 min according JIS-C-5101-4	
Vibration Resistance Test	Max. 10g force, f_{RANGE} 10Hz … 55Hz, amplitude 0.75mm; X/Y/Z-axis each 2h; capacitor rigidly clamped by body to surface ▪ IEC 60068-2-6	

For further information please contact sales@capxon.org

STANDARD RATINGS

NOT FOR NEW DESIGNS

V_R (V)	C_R (µF)	ø D (mm)	L (mm)	Typ. ESR +20°C ▪ 120Hz (mΩ)	Max. ESR +20°C ▪ 120Hz (mΩ)	I_R ▪ Max. Ripple Current +105°C ▪ 120Hz (mA rms)	CapXon Part Number
160	330	30	25	310	600	1390	HT331M160O250A □□
	390	30	25	260	510	1470	HT391M160O250A □□
	470	30	30	220	420	1640	HT471M160O300A □□
	560	30	30	180	360	1760	HT561M160O300A □□
	680	30	35	150	290	1980	HT681M160O350A □□
	680	35	30	150	290	1980	HT681M160P300A □□
	820	30	40	120	240	2360	HT821M160O400A □□
	820	35	30	120	240	2360	HT821M160P300A □□
	1000	30	55	100	200	2800	HT102M160O550A □□
	1000	35	35	100	200	2600	HT102M160P350A □□
	1200	30	55	87	170	3230	HT122M160O550A □□
200	220	30	25	460	900	1150	HT221M200O250A □□
	270	30	25	380	740	1220	HT271M200O250A □□
	330	30	30	310	600	1530	HT331M200O300A □□
	390	30	30	260	510	1570	HT391M200O300A □□
	390	35	25	260	510	1570	HT391M200P250A □□
	470	30	35	220	420	1740	HT471M200O350A □□
	470	35	30	220	420	1740	HT471M200P300A □□
	560	30	40	180	360	1890	HT561M200O400A □□
	560	35	30	180	360	1890	HT561M200P300A □□
	680	30	45	150	290	2300	HT681M200O450A □□
	680	35	35	150	290	2300	HT681M200P350A □□
	820	30	50	120	240	2740	HT821M200O500A □□
	820	35	40	120	240	2740	HT821M200P400A □□
250	180	30	25	570	1110	980	HT181M250O250A □□
	220	30	30	460	900	1170	HT221M250O300A □□
	270	30	30	380	740	1320	HT271M250O300A □□
	330	30	35	310	600	1660	HT331M250O350A □□
	330	35	30	310	600	1660	HT331M250P300A □□
	390	30	40	260	510	1770	HT391M250O400A □□
	390	35	30	260	510	1770	HT391M250P300A □□
	470	30	40	220	420	1880	HT471M250O400A □□
	470	35	35	220	420	1880	HT471M250P350A □□
	560	30	50	180	360	2060	HT561M250O500A □□
	560	35	40	180	360	2060	HT561M250P400A □□
350	390	35	40	260	510	1970	HT391M350P400A □□
	470	35	45	220	420	2220	HT471M350P450A □□
	560	35	45	180	360	2460	HT561M350P450A □□
	560	40	40	180	360	2510	HT561M350Q400A □□
	680	35	55	150	290	2840	HT681M350P550A □□
	680	40	45	150	290	2840	HT681M350Q450A □□
	820	35	65	120	240	3260	HT821M350P650A □□
	820	40	50	120	240	3200	HT821M350Q500A □□
	820	45	40	120	240	3160	HT821M350V400A □□

□□: See description at end of standard ratings

For further information please contact sales@capxon.org

STANDARD RATINGS

NOT FOR NEW DESIGNS

V_R (V)	C_R (µF)	ø D (mm)	L (mm)	Typ. ESR +20°C ▪ 120Hz (mΩ)	Max. ESR +20°C ▪ 120Hz (mΩ)	I_R ▪ Max. Ripple Current +105°C ▪ 120Hz (mA rms)	CapXon Part Number
350	1000	35	75	100	200	3760	HT102M350P750A □□
	1000	40	60	100	200	3680	HT102M350Q600A □□
	1000	45	45	100	200	3570	HT102M350V450A □□
	1200	35	85	87	170	4310	HT122M350P850A □□
	1200	40	65	87	170	4150	HT122M350Q650A □□
	1200	45	50	87	170	4000	HT122M350V500A □□
	1500	40	80	67	130	4960	HT152M350Q800A □□
	1500	45	65	67	130	4800	HT152M350V650A □□
	1800	40	95	56	110	5720	HT182M350Q950A □□
	1800	45	75	56	110	5450	HT182M350V750A □□
	2200	45	90	46	90	6320	HT222M350V900A □□
	2700	45	100	38	74	7300	HT272M350VA00A □□
400	82	30	25	1250	2430	730	HT820M400O250A □□
	100	30	30	1020	1990	820	HT101M400O300A □□
	120	30	35	850	1660	870	HT121M400O350A □□
	120	35	25	850	1660	870	HT121M400P250A □□
	150	30	40	680	1330	1000	HT151M400O400A □□
	150	35	30	680	1330	1000	HT151M400P300A □□
	180	30	45	570	1110	1160	HT181M400O450A □□
	180	35	35	570	1110	1140	HT181M400P350A □□
	220	30	50	460	900	1280	HT221M400O500A □□
	220	35	40	460	900	1280	HT221M400P400A □□
	330	35	40	310	600	1830	HT331M400P400A □□
	390	35	45	260	510	2050	HT391M400P450A □□
	470	35	45	220	420	2320	HT471M400P450A □□
	470	40	40	220	420	2330	HT471M400Q400A □□
	560	35	55	180	360	2600	HT561M400P550A □□
	560	40	45	180	360	2610	HT561M400Q450A □□
	560	45	40	180	360	2600	HT561M400V400A □□
	680	35	65	150	290	2990	HT681M400P650A □□
	680	40	50	150	290	2950	HT681M400Q500A □□
	680	45	40	150	290	2930	HT681M400V400A □□
	820	35	75	120	240	3430	HT821M400P750A □□
	820	40	60	120	240	3370	HT821M400Q600A □□
	820	45	45	120	240	3300	HT821M400V450A □□
	1000	35	85	100	200	3980	HT102M400P850A □□
	1000	40	65	100	200	3840	HT102M400Q650A □□
	1000	45	50	100	200	3730	HT102M400V500A □□
	1200	35	100	87	170	4590	HT122M400PA00A □□
	1200	40	75	87	170	4380	HT122M400Q750A □□
	1200	45	60	87	170	4260	HT122M400V600A □□
	1500	40	95	67	130	5300	HT152M400Q950A □□
	1500	45	70	67	130	5050	HT152M400V700A □□
	1800	45	90	56	110	5820	HT182M400V900A □□

□□: See description at end of standard ratings

For further information please contact sales@capxon.org

STANDARD RATINGS

NOT FOR NEW DESIGNS

V_R (V)	C_R (µF)	ø D (mm)	L (mm)	Typ. ESR +20°C ▪ 120Hz (mΩ)	Max. ESR +20°C ▪ 120Hz (mΩ)	I_R ▪ Max. Ripple Current +105°C ▪ 120Hz (mA rms)	CapXon Part Number
450	270	35	40	500	980	1620	HT271M450P400A ☐☐
	330	35	45	410	800	1850	HT331M450P450A ☐☐
	390	35	50	350	680	2070	HT391M450P500A ☐☐
	390	40	40	350	680	2080	HT391M450Q400A ☐☐
	470	35	55	290	560	2350	HT471M450P550A ☐☐
	470	40	45	290	560	2350	HT471M450Q450A ☐☐
	470	45	40	290	560	2360	HT471M450V400A ☐☐
	560	35	65	240	470	2660	HT561M450P650A ☐☐
	560	40	50	240	470	2640	HT561M450Q500A ☐☐
	560	45	40	240	470	2630	HT561M450V400A ☐☐
	680	35	75	200	390	3070	HT681M450P750A ☐☐
	680	40	60	200	390	3020	HT681M450Q600A ☐☐
	680	45	45	200	390	2970	HT681M450V450A ☐☐
	820	35	85	160	320	3540	HT821M450P850A ☐☐
	820	40	65	160	320	3430	HT821M450Q650A ☐☐
	820	45	50	160	320	3300	HT821M450V500A ☐☐
	1000	35	100	140	270	4130	HT102M450PA00A ☐☐
	1000	40	70	140	270	3750	HT102M450Q700A ☐☐
	1000	40	80	140	270	3980	HT102M450Q800A ☐☐
	1000	45	60	140	270	3860	HT102M450V600A ☐☐
	1200	40	95	110	220	4660	HT122M450Q950A ☐☐
	1200	45	75	110	220	4500	HT122M450V750A ☐☐
	1500	45	90	92	180	5300	HT152M450V900A ☐☐

☐☐: Enter **Y6** for multipin-type ▪ 6mm pin length ☐☐: Enter **Y4** for multipin type ▪ 4mm pin length

DIMENSIONS ▪ All dimensions in mm

Multi-pin version ▪ Standard type

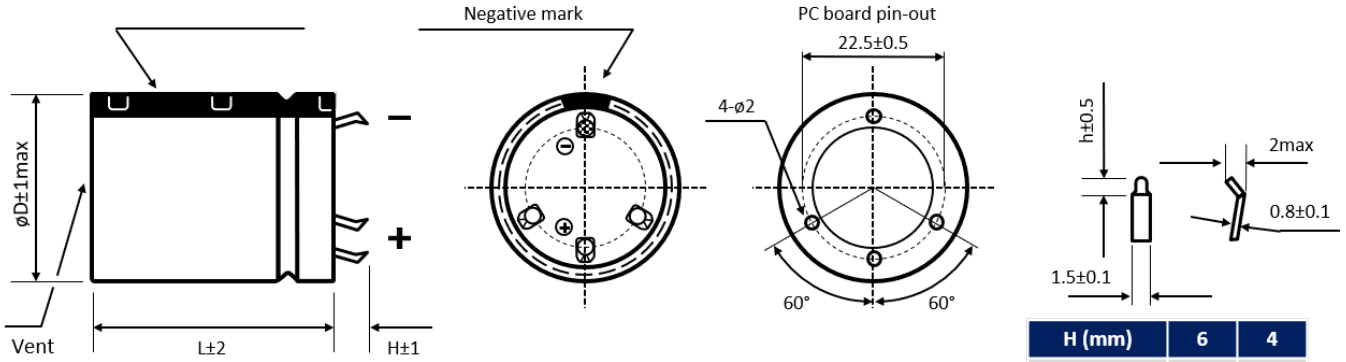

H (mm)	6	4
h (mm)	2.5	1.5

Standard: H = 6 ± 1mm. Also available H = 4 ± 1mm

For further information please contact sales@capxon.org

MULTIPLIER K_f for RIPPLE CURRENT vs. FREQUENCY

V_R (V) / Frequency (Hz)	50/60	100/120	300	1k	10k	50k - 100k
$160 \le V_R \le 250$	0.81	1	1.17	1.32	1.45	1.5
$350 \le V_R \le 450$	0.77	1	1.16	1.3	1.41	1.43

PRECAUTIONS, GUIDELINES AND PACKAGING INFORMATON

Unless otherwise agreed in individual specifications, all products are subject to our “General Precautions and Guidelines” as well as our “Packaging Information”. Please refer to the following pages in the table.

General Precautions and Guidelines	Packaging Information Liquid Snap-In
Page 837	Page 579

USEFUL LIFE

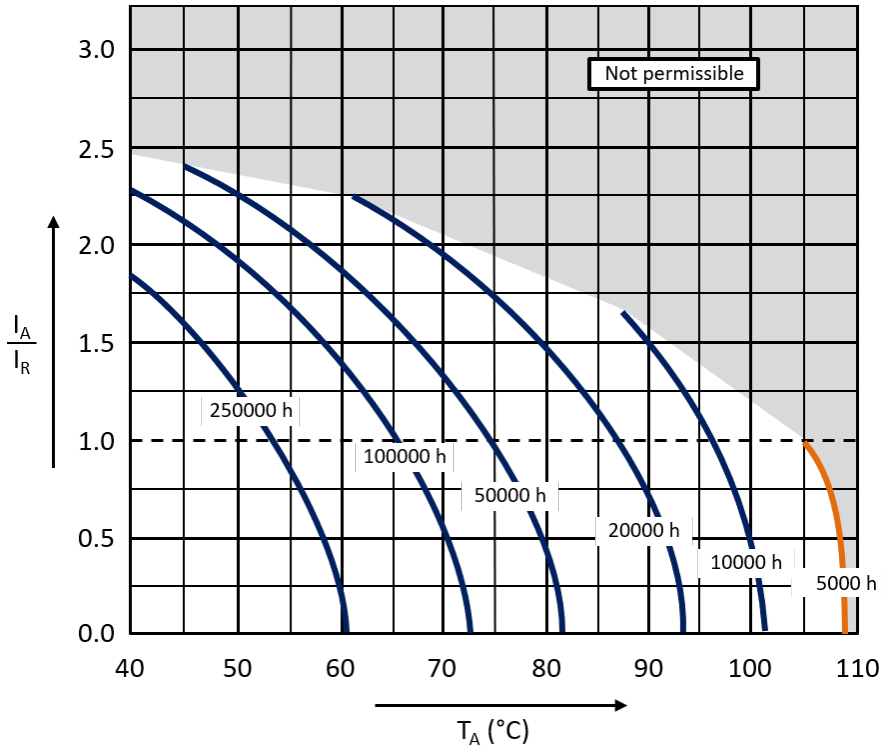

With: I_A: Application current
I_R: Rated ripple current (A RMS)
T_A: Application temperature of the capacitor

For further information please contact sales@capxon.org

DISCLAIMER

All product related data (e.g. specification, statements and general information) are subject to change without any notice. It is necessary that the customer observes all product related technical / application information and handling instructions.

CapXon products are designed and manufactured according to severe quality and safety standards. Under no circumstance, CapXon warrants that any CapXon product is suitable for the purposes intended for your application, even CapXon knows the application. It is customer's duty and obligation to check and make sure that CapXon products are suitable for the purposes intended and select the correct and proper CapXon product. Customers are requested to perform a sufficient validation and reliability evaluation to assure needed safety level and reliability performance by suitable designs and to apply proper safeguards (e.g. redundancies, protective circuits).

Particular operating conditions (ambient temperature, ripple current, voltage, thermal resistance, etc.) as well as storage, production or assembly may affect the performance and the lifetime of the capacitor. Please consult CapXon for lifetime estimation, failure mode considerations or worst-case scenarios according to the product technology, product tolerances / deviations or change of the characteristics of the capacitor due to shipment, storage, handling, production and usage.

For aerospace or military application, life-saving, life-sustaining, safety critical applications or any application where failure may cause severe personal injury or death, please consult us before design-in the capacitor in your application.

Except for the written expressed warranties, CapXon does not impliedly, by assumption or whatever else, warrant, undertake, promise any other warranty or guaranty for any CapXon product.

For further information, please visit our website www.capxongroup.com or contact CapXon directly.

UJ SERIES ▪ LONG LIFE, AUTOMOTIVE 105°C TYPE

KEY FEATURES

AEC-Q 200 · LONG LIFE · HIGH VOLTAGE



- **ALUMINUM ELECTROLYTIC CAPACITOR** ▪ Snap-In type
- Useful life: 105°C ▪ 5 000 hours
- Extremely stable dissipation factor and leakage current
- Especially for applications with demanding operating environment
- AEC-Q200 version available

HF Halogen Free · RoHS & REACH COMPLIANT

SPECIFICATIONS

Items		Performance Characteristics	
Operating Temperature Range		-40 ~ +105°C	-25 ~ +105°C
Rated Voltage Range	V_R	200 ~ 450V DC	500 ~ 550V DC
Surge Voltage	V_S	($V_R \le 315V$) ▪ $V_S = 1.15 \cdot V_R$	($V_R > 315V$) ▪ $V_S = 1.10 \cdot V_R$
Capacitance Range	C_R	82 ~ 3300µF	47 ~ 1000µF
Cap. Tolerance	ΔC	±20% (120Hz ▪ 20°C)	
Leakage Current (20°C ▪ V_R applied)	I_{LEAK}	≤ $\sqrt{3} \cdot C_R \cdot V_R$ ▪ After 5 minutes [I_{LEAK} (µA) ; C_R (µF) ; V_R (V)]	
Dissipation Factor % (20°C ▪ 120Hz)	tanδ	V_R (V DC)	200 ~ 400	450 ~ 550
		tanδ	15	20
Self-Resistance (20°C ▪ 120Hz)	ESR	Not to exceed the values shown in standard ratings		
Low Temperature Characteristics at 120Hz	Z ratio max.	V_R (V DC)	200 ~ 250	315 ~ 450	500 ~ 550
		Z-25°C/Z+20°C	4	5	6
		Z-40°C/Z+20°C	7	10	-

Lifetime Test		
Useful Life 105°C (V_R & I_R applied)	Test	**5 000 hours**
	$\triangle C/C_R$	≤ ±20% of initial measured value
	tanδ	≤ 200% of initial specified value
	I_{Leak}	≤ the initial specified value
	Deviation Rate @ Useful Life: 10 000 FIT = 1%/1000h with 60% confidence level ▪ parts show higher drift as test criteria	
Endurance 105°C (V_R & I_R applied)	Test	**2 000 hours**
	$\triangle C/C_R$	≤ ±15% of initial measured value
	tanδ	≤ 175% of initial specified value
	I_{Leak}	≤ the initial specified value
Shelf Life 105°C (V_R = 0)	Test	**1 000 hours**
	$\triangle C/C_R$	≤ ±15% of initial measured value
	tanδ	≤ 175% of initial specified value
	I_{Leak}	≤ the initial specified value
	Before measurement: Restore capacitor to 20°C, apply V_R for 30 min according JIS-C-5101-4	
Vibration Resistance Test	Max. 10g force, f_{RANGE} 10Hz … 55Hz, amplitude 0.75mm; X/Y/Z-axis each 2h; capacitor rigidly clamped by body to surface ▪ IEC 60068-2-6	

For further information please contact sales@capxon.org

STANDARD RATINGS

V_R (V)	C_R (µF)	ø D (mm)	L (mm)	Typ. ESR +20°C ▪ 120Hz (mΩ)	Max. ESR +20°C ▪ 120Hz (mΩ)	I_R ▪ Max. Ripple Current +105°C ▪ 120Hz (mA rms)	CapXon Part Number
200	330	22	25	330	600	1130	UJ331M200M250A□□□
	390	22	25	280	510	1210	UJ391M200M250A□□□
	390	22	30	280	510	1250	UJ391M200M300A□□□
	390	25	25	280	510	1310	UJ391M200N250A□□□
	470	22	30	230	420	1400	UJ471M200M300A□□□
	470	25	25	230	420	1400	UJ471M200N250A□□□
	470	25	30	230	420	1520	UJ471M200N300A□□□
	560	22	35	200	360	1610	UJ561M200M350A□□□
	560	25	30	200	360	1610	UJ561M200N300A□□□
	560	30	25	200	360	1620	UJ561M200O250A□□□
	680	22	40	160	290	1860	UJ681M200M400A□□□
	680	25	30	160	290	1690	UJ681M200N300A□□□
	680	30	25	160	290	1980	UJ681M200O250A□□□
	820	22	45	130	240	2140	UJ821M200M450A□□□
	820	25	35	130	240	2140	UJ821M200N350A□□□
	820	30	30	130	240	2290	UJ821M200O300A□□□
	1000	22	50	110	200	2480	UJ102M200M500A□□□
	1000	25	40	110	200	2480	UJ102M200N400A□□□
	1000	30	30	110	200	2520	UJ102M200O300A□□□
	1000	35	25	110	200	2440	UJ102M200P250A□□□
	1200	25	45	94	170	2890	UJ122M200N450A□□□
	1200	30	35	94	170	2890	UJ122M200O350A□□□
	1200	35	30	94	170	3030	UJ122M200P300A□□□
	1500	25	55	72	130	3520	UJ152M200N550A□□□
	1500	30	40	72	130	3590	UJ152M200O400A□□□
	1500	35	35	72	130	3520	UJ152M200P350A□□□
	1800	30	45	61	110	4090	UJ182M200O450A□□□
	1800	35	35	61	110	3770	UJ182M200P350A□□□
	2200	30	55	50	90	4820	UJ222M200O550A□□□
	2200	35	45	50	90	4820	UJ222M200P450A□□□
	2700	35	50	41	74	5160	UJ272M200P500A□□□
	3300	35	55	33	60	5850	UJ332M200P550A□□□
250	220	22	25	500	900	910	UJ221M250M250A□□□
	270	22	25	410	740	1030	UJ271M250M250A□□□
	330	22	30	330	600	1200	UJ331M250M300A□□□
	390	22	35	280	510	1370	UJ391M250M350A□□□
	390	25	25	280	510	1260	UJ391M250N250A□□□
	470	22	35	230	420	1530	UJ471M250M350A□□□
	470	25	30	230	420	1530	UJ471M250N300A□□□
	470	30	25	230	420	1690	UJ471M250O250A□□□
	560	22	40	200	360	1760	UJ561M250M400A□□□
	560	25	35	200	360	1680	UJ561M250N350A□□□
	680	22	45	160	290	2040	UJ681M250M450A□□□
	680	25	40	160	290	2130	UJ681M250N400A□□□

□□□ See description at end of standard ratings

For further information please contact sales@capxon.org

STANDARD RATINGS

V_R (V)	C_R (µF)	ø D (mm)	L (mm)	Typ. ESR +20°C ▪ 120Hz (mΩ)	Max. ESR +20°C ▪ 120Hz (mΩ)	I_R ▪ Max. Ripple Current +105°C ▪ 120Hz (mA rms)	CapXon Part Number
250	680	30	30	160	290	2130	UJ681M250O300A□□□
	680	35	25	160	290	2120	UJ681M250P250A□□□
	820	25	45	130	240	2230	UJ821M250N450A□□□
	820	30	35	130	240	2450	UJ821M250O350A□□□
	820	35	30	130	240	2620	UJ821M250P300A□□□
	1000	25	50	110	200	2570	UJ102M250N500A□□□
	1000	30	40	110	200	2850	UJ102M250O400A□□□
	1000	35	30	110	200	2770	UJ102M250P300A□□□
	1200	30	45	94	170	3420	UJ122M250O450A□□□
	1200	35	35	94	170	3260	UJ122M250P350A□□□
	1500	30	50	72	130	3720	UJ152M250O500A□□□
	1500	35	40	72	130	3780	UJ152M250P400A□□□
	1800	35	45	61	110	4090	UJ182M250P450A□□□
	2200	35	55	50	90	5040	UJ222M250P550A□□□
350	100	22	25	1110	1990	590	UJ101M350M250A□□□
	120	22	30	920	1660	690	UJ121M350M300A□□□
	120	25	25	920	1660	690	UJ121M350N250A□□□
	150	22	35	740	1330	800	UJ151M350M350A□□□
	180	25	30	620	1110	850	UJ181M350N300A□□□
	180	30	25	620	1110	890	UJ181M350O250A□□□
	220	22	40	500	900	990	UJ221M350M400A□□□
	220	25	40	500	900	1100	UJ221M350N400A□□□
	220	30	30	500	900	1080	UJ221M350O300A□□□
	220	35	25	500	900	1080	UJ221M350P250A□□□
	270	25	45	410	740	1280	UJ271M350N450A□□□
	270	30	35	410	740	1250	UJ271M350O350A□□□
	270	35	25	410	740	1250	UJ271M350P250A□□□
	330	25	50	330	600	1550	UJ331M350N500A□□□
	330	30	35	330	600	1460	UJ331M350O350A□□□
	330	35	30	330	600	1460	UJ331M350P300A□□□
	390	35	40	280	510	1920	UJ391M350P400A□□□
	470	35	45	230	420	2170	UJ471M350P450A□□□
	560	35	45	200	360	2410	UJ561M350P450A□□□
	560	40	40	200	360	2460	UJ561M350Q400A□□□
	680	35	55	160	290	2790	UJ681M350P550A□□□
	680	40	45	160	290	2790	UJ681M350Q450A□□□
	820	35	60	130	240	3210	UJ821M350P600A□□□
	820	40	50	130	240	3150	UJ821M350Q500A□□□
	820	45	40	130	240	3110	UJ821M350V400A□□□
	1000	35	60	110	200	3230	UJ102M350P600A□□□
	1000	40	50	110	200	3260	UJ102M350Q500A□□□
	1200	40	55	94	170	3680	UJ122M350Q550A□□□
	1500	40	65	72	130	4560	UJ152M350Q650A□□□
	1800	40	75	61	110	5670	UJ182M350Q750A□□□

□□□ See description at end of standard ratings

For further information please contact sales@capxon.org

STANDARD RATINGS

V_R (V)	C_R (µF)	ø D (mm)	L (mm)	Typ. ESR +20°C ▪ 120Hz (mΩ)	Max. ESR +20°C ▪ 120Hz (mΩ)	I_R ▪ Max. Ripple Current +105°C ▪ 120Hz (mA rms)	CapXon Part Number
400	100	22	25	1110	1990	650	UJ101M400M250A□□□
	120	22	25	920	1660	920	UJ121M400M250A□□□
	150	22	30	740	1330	1080	UJ151M400M300A□□□
	180	22	30	620	1110	1150	UJ181M400M300A□□□
	180	25	25	620	1110	1120	UJ181M400N250A□□□
	220	22	35	500	900	1320	UJ221M400M350A□□□
	220	25	30	500	900	1300	UJ221M400N300A□□□
	270	22	40	410	740	1500	UJ271M400M400A□□□
	270	25	35	410	740	1490	UJ271M400N350A□□□
	270	30	25	410	740	1330	UJ271M400O250A□□□
	330	22	50	330	600	1760	UJ331M400M500A□□□
	330	25	40	330	600	1680	UJ331M400N400A□□□
	330	30	30	330	600	1550	UJ331M400O300A□□□
	330	35	25	330	600	1440	UJ331M400P250A□□□
	390	22	55	280	510	1940	UJ391M400M550A□□□
	390	25	45	280	510	1860	UJ391M400N450A□□□
	390	30	35	280	510	1750	UJ391M400O350A□□□
	390	35	30	280	510	1750	UJ391M400P300A□□□
	470	25	50	230	420	2070	UJ471M400N500A□□□
	470	30	40	230	420	1970	UJ471M400O400A□□□
	470	35	30	230	420	1910	UJ471M400P300A□□□
	560	25	60	200	360	2370	UJ561M400N600A□□□
	560	30	45	200	360	2180	UJ561M400O450A□□□
	560	35	35	200	360	1920	UJ561M400P350A□□□
	680	30	50	160	290	2410	UJ681M400O500A□□□
	680	35	40	160	290	2350	UJ681M400P400A□□□
	820	30	60	130	240	2760	UJ821M400O600A□□□
	820	35	45	130	240	2670	UJ821M400P450A□□□
	1000	35	55	110	200	3160	UJ102M400P550A□□□
	1000	40	50	110	200	3240	UJ102M400Q500A□□□
	1200	35	60	94	170	3560	UJ122M400P600A□□□
	1200	40	55	94	170	3640	UJ122M400Q550A□□□
	1500	45	70	72	130	4680	UJ152M400V700A□□□
	1800	45	80	61	110	5290	UJ182M400V800A□□□
450	82	22	25	1790	3230	590	UJ820M450M250A□□□
	100	22	30	1470	2650	690	UJ101M450M300A□□□
	100	25	25	1470	2650	690	UJ101M450N250A□□□
	120	22	35	1230	2210	720	UJ121M450M350A□□□
	150	22	35	980	1770	920	UJ151M450M350A□□□
	150	25	30	980	1770	910	UJ151M450N300A□□□
	150	30	25	980	1770	970	UJ151M450O250A□□□
	180	22	40	820	1470	1280	UJ181M450M400A□□□
	180	25	30	820	1470	1200	UJ181M450N300A□□□
	180	30	25	820	1470	1180	UJ181M450O250A□□□

□□□ See description at end of standard ratings

STANDARD RATINGS

V_R (V)	C_R (µF)	ø D (mm)	L (mm)	Typ. ESR +20°C ▪ 120Hz (mΩ)	Max. ESR +20°C ▪ 120Hz (mΩ)	I_R ▪ Max. Ripple Current +105°C ▪ 120Hz (mA rms)	CapXon Part Number
450	220	22	45	670	1210	1440	UJ221M450M450A□□□
	220	25	35	670	1210	1370	UJ221M450N350A□□□
	220	30	30	670	1210	1360	UJ221M450O300A□□□
	330	22	60	440	800	1860	UJ331M450M600A□□□
	330	25	50	440	800	1820	UJ331M450N500A□□□
	330	30	35	440	800	1640	UJ331M450O350A□□□
	330	35	30	440	800	1640	UJ331M450P300A□□□
	390	25	55	380	680	2010	UJ391M450N550A□□□
	390	30	40	380	680	1830	UJ391M450O400A□□□
	390	35	35	380	680	1830	UJ391M450P350A□□□
	470	25	60	310	560	2210	UJ471M450N600A□□□
	470	30	45	310	560	2050	UJ471M450O450A□□□
	470	35	40	310	560	2050	UJ471M450P400A□□□
	560	30	50	260	470	2260	UJ561M450O500A□□□
	560	35	45	260	470	2180	UJ561M450P450A□□□
	680	30	60	220	390	2590	UJ681M450O600A□□□
	680	35	50	220	390	2580	UJ681M450P500A□□□
	820	35	60	180	320	2800	UJ821M450P600A□□□
	820	40	50	180	320	2800	UJ821M450Q500A□□□
	1000	35	65	150	270	3210	UJ102M450P650A□□□
	1000	40	55	150	270	3210	UJ102M450Q550A□□□
	1200	40	70	120	220	3540	UJ122M450Q700A□□□
500	56	22	25	2630	4740	630	UJ560M500M250A□□□
	82	22	35	1790	3230	820	UJ820M500M350A□□□
	82	25	25	1790	3230	780	UJ820M500N250A□□□
	120	22	45	1230	2210	1050	UJ121M500M450A□□□
	120	25	35	1230	2210	1020	UJ121M500N350A□□□
	120	30	25	1230	2210	970	UJ121M500O250A□□□
	150	22	50	980	1770	1200	UJ151M500M500A□□□
	150	25	40	980	1770	1170	UJ151M500N400A□□□
	150	30	30	980	1770	1130	UJ151M500O300A□□□
	150	35	25	980	1770	1090	UJ151M500P250A□□□
	180	22	60	820	1470	1370	UJ181M500M600A□□□
	180	25	45	820	1470	1310	UJ181M500N450A□□□
	180	30	35	820	1470	1280	UJ181M500O350A□□□
	180	35	30	820	1470	1260	UJ181M500P300A□□□
	220	25	50	670	1210	1460	UJ221M500N500A□□□
	220	30	40	670	1210	1450	UJ221M500O400A□□□
	220	35	35	670	1210	1440	UJ221M500P350A□□□
	270	25	60	540	980	1700	UJ271M500N600A□□□
	270	30	45	540	980	1630	UJ271M500O450A□□□
	270	35	35	540	980	1630	UJ271M500P350A□□□
	330	30	50	440	800	1810	UJ331M500O500A□□□
	330	35	40	440	800	1710	UJ331M500P400A□□□

□□□ See description at end of standard ratings

For further information please contact sales@capxon.org

STANDARD RATINGS

V_R (V)	C_R (µF)	ø D (mm)	L (mm)	Typ. ESR +20°C ▪ 120Hz (mΩ)	Max. ESR +20°C ▪ 120Hz (mΩ)	I_R ▪ Max. Ripple Current +105°C ▪ 120Hz (mA rms)	CapXon Part Number
500	390	30	60	380	680	2060	UJ391M500O600A□□□
	390	35	50	380	680	2060	UJ391M500P500A□□□
	470	35	55	310	560	2190	UJ471M500P550A□□□
	560	35	60	260	470	2650	UJ561M500P600A□□□
	680	40	60	220	390	3000	UJ681M500Q600A□□□
	820	40	70	180	320	4000	UJ821M500Q700A□□□
	1000	40	80	150	270	4680	UJ102M500Q800A□□□
550	47	25	25	3130	5640	470	UJ470M550N250A□□□
	56	25	30	2630	4740	540	UJ560M550N300A□□□
	68	25	35	2170	3900	620	UJ680M550N350A□□□
	68	30	25	2170	3900	650	UJ680M550O250A□□□
	82	25	35	1790	3230	690	UJ820M550N350A□□□
	82	30	30	1790	3230	730	UJ820M550O300A□□□
	100	25	40	1470	2650	800	UJ101M550N400A□□□
	100	30	35	1470	2650	840	UJ101M550O350A□□□
	100	35	25	1470	2650	870	UJ101M550P250A□□□
	120	25	50	1230	2210	920	UJ121M550N500A□□□
	120	30	35	1230	2210	940	UJ121M550O350A□□□
	120	35	30	1230	2210	1040	UJ121M550P300A□□□
	150	25	55	980	1770	1090	UJ151M550N550A□□□
	150	30	45	980	1770	1170	UJ151M550O450A□□□
	150	35	35	980	1770	1210	UJ151M550P350A□□□
	180	30	50	820	1470	1330	UJ181M550O500A□□□
	180	35	40	820	1470	1360	UJ181M550P400A□□□
	180	35	35	820	1470	1290	UJ181M550P350A□□□
	220	30	55	670	1210	1540	UJ221M550O550A□□□
	220	35	45	670	1210	1560	UJ221M550P450A□□□
	220	35	35	670	1210	1400	UJ221M550P350A□□□
	270	35	50	540	980	1790	UJ271M550P500A□□□
	270	35	40	540	980	1630	UJ271M550P400A□□□
	330	35	50	440	800	1660	UJ331M550P500A□□□
	390	35	55	380	680	1850	UJ391M550P550A□□□
	470	35	60	310	560	2100	UJ471M550P600A□□□

□□□: Enter **P6** for standard type ▪ 6mm pin length
□□□: Enter **P6X** for standard type ▪ 6mm pin length ▪ AEC-Q200

□□□: Enter **Z6** for 3-pin type ▪ 6mm pin length
□□□: Enter **Z6X** for 3-pin type ▪ 6mm pin length ▪ AEC-Q200

□□□: Enter **Y6** for multi-pin type ▪ 6mm pin length
□□□: Enter **Y6X** for multi-pin type ▪ 6mm pin length ▪ AEC-Q200

□□□: Enter **P4** for standard type ▪ 4mm pin length
□□□: Enter **P4X** for standard type ▪ 4mm pin length ▪ AEC-Q200

□□□: Enter **Z4** for 3-pin type ▪ 4mm pin length
□□□: Enter **Z4X** for 3-pin type ▪ 4mm pin length ▪ AEC-Q200

□□□: Enter **Y4** for multi-pin type ▪ 4mm pin length
□□□: Enter **Y4X** for multi-pin type ▪ 4mm pin length ▪ AEC-Q200

For further information please contact sales@capxon.org

DIMENSIONS ▪ All dimensions in mm

2-pin version ▪ Standard type

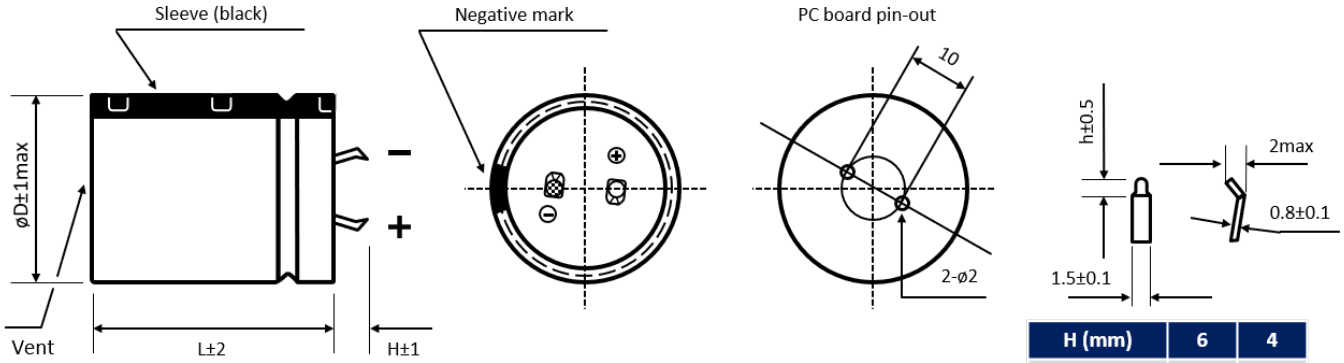

H (mm)	6	4
h (mm)	2.5	1.5

Standard: H = 6 ± 1mm. Also available H = 4 ± 1mm

3-pin version ▪ Polarity protection

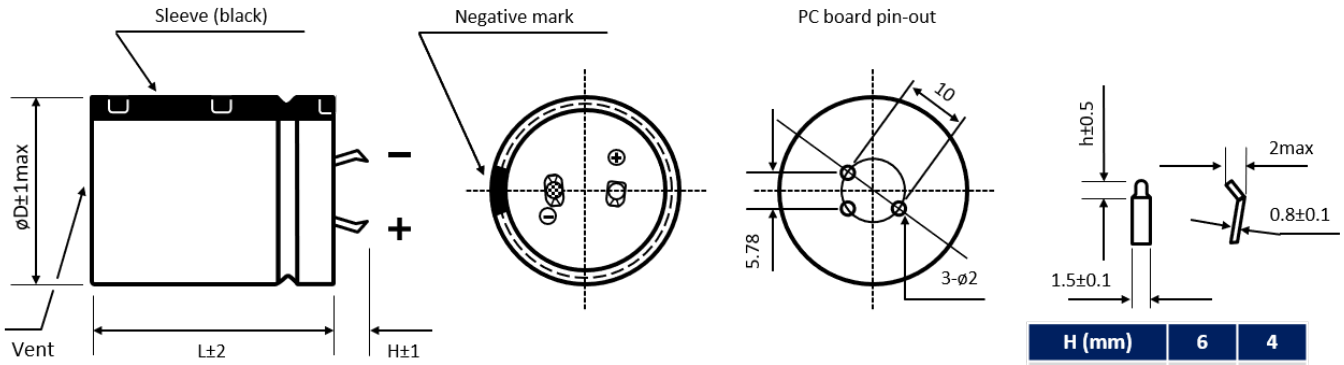

H (mm)	6	4
h (mm)	2.5	1.5

Standard: H = 4 ± 1mm. Also available H = 6 ± 1mm

Multipin version ▪ Diameter ø D ≥ 30 mm

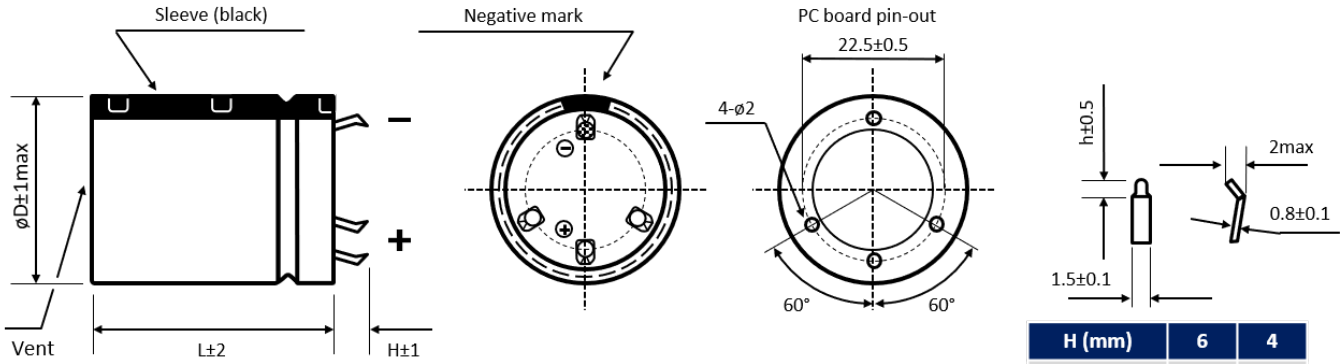

H (mm)	6	4
h (mm)	2.5	1.5

Standard: H = 6 ± 1mm. Also available H = 4 ± 1mm

Further possible terminal styles can be found in our packaging information liquid snap-in.

For further information please contact sales@capxon.org

MULTIPLIER K_f for RIPPLE CURRENT vs. FREQUENCY

V_R (V) / Frequency (Hz)	50/60	100/120	300	1k	10k	50k - 100k
$200 \le V_R \le 250$	0.81	1	1.17	1.32	1.45	1.5
$350 \le V_R \le 550$	0.77	1	1.16	1.3	1.41	1.43

PRECAUTIONS, GUIDELINES AND PACKAGING INFORMATON

Unless otherwise agreed in individual specifications, all products are subject to our “General Precautions and Guidelines” as well as our “Packaging Information”. Please refer to the following pages in the table.

General Precautions and Guidelines	Packaging Information Liquid Snap-In
Page 837	Page 579

USEFUL LIFE

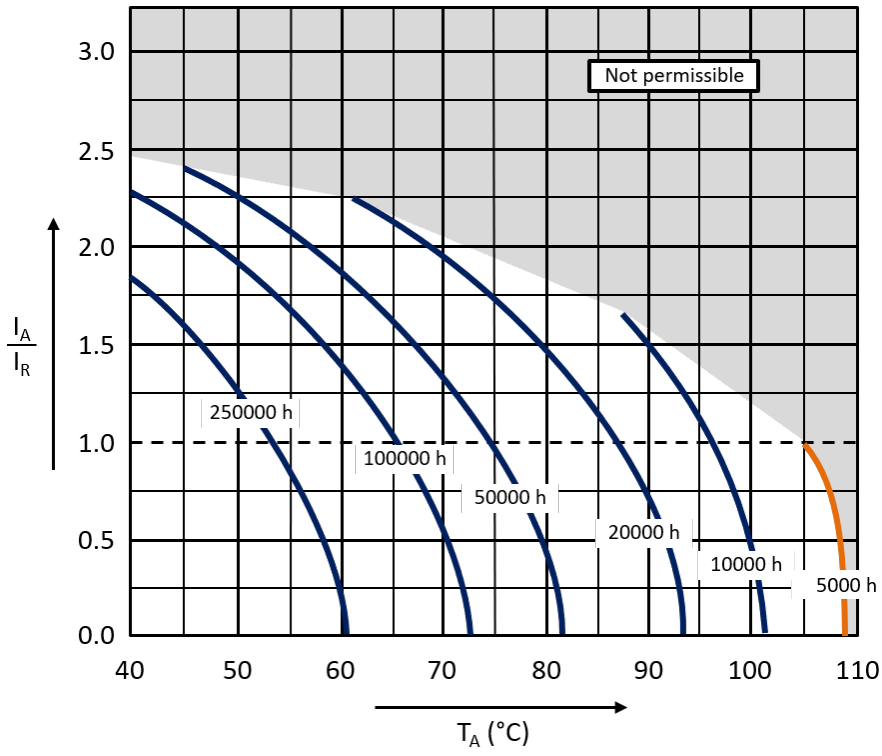

With: I_A: Application current
I_R: Rated ripple current (A RMS)
T_A: Application temperature of the capacitor

For further information please contact sales@capxon.org

DISCLAIMER

All product related data (e.g. specification, statements and general information) are subject to change without any notice. It is necessary that the customer observes all product related technical / application information and handling instructions.

CapXon products are designed and manufactured according to severe quality and safety standards. Under no circumstance, CapXon warrants that any CapXon product is suitable for the purposes intended for your application, even CapXon knows the application. It is customer's duty and obligation to check and make sure that CapXon products are suitable for the purposes intended and select the correct and proper CapXon product. Customers are requested to perform a sufficient validation and reliability evaluation to assure needed safety level and reliability performance by suitable designs and to apply proper safeguards (e.g. redundancies, protective circuits).

Particular operating conditions (ambient temperature, ripple current, voltage, thermal resistance, etc.) as well as storage, production or assembly may affect the performance and the lifetime of the capacitor. Please consult CapXon for lifetime estimation, failure mode considerations or worst-case scenarios according to the product technology, product tolerances / deviations or change of the characteristics of the capacitor due to shipment, storage, handling, production and usage.

For aerospace or military application, life-saving, life-sustaining, safety critical applications or any application where failure may cause severe personal injury or death, please consult us before design-in the capacitor in your application.

Except for the written expressed warranties, CapXon does not impliedly, by assumption or whatever else, warrant, undertake, promise any other warranty or guaranty for any CapXon product.

For further information, please visit our website www.capxongroup.com or contact CapXon directly.

HU SERIES ▪ ULTRA LONG LIFE 105°C TYPE



KEY FEATURES

HIGH VOLTAGE LONG LIFE

- **ALUMINUM ELECTROLYTIC CAPACITOR** ▪ Snap-In type
- Useful life: 105°C ▪ 5 000 hours up to 8 000 hours
- Wide capacitance range
- Small dimensions
- Stable operating under steady state environment

HF Halogen Free · RoHS & REACH COMPLIANT

SPECIFICATIONS

Items		Performance Characteristics									
Operating Temperature Range		-40 ~ +105°C					-25 ~ +105°C				
Rated Voltage Range	V_R	10 ~ 350V DC					385 ~ 500V DC				
Surge Voltage	V_S	($V_R \le 315V$): $V_S = 1.15 \cdot V_R$					($V_R > 315V$): $V_S = 1.10 \cdot V_R$				
Capacitance Range	C_R	56 ~ 82000µF					33 ~ 1200µF				
Cap. Tolerance	ΔC	±20% (120Hz ▪ 20°C)									
Leakage Current (20°C ▪ V_R applied)	I_{LEAK}	≤ √3·C_R·V_R ▪ After 5 minutes [I_{LEAK} (µA) ; C_R (µF) ; V_R (V)]									
Dissipation Factor % (20°C ▪ 120Hz)	tanδ	µF / V DC	10	16	25	35	50	63	80	100	160 ~ 420	450 ~ 500
		≤ 8200	35	35	30	25	20	20	15	15	15	20
		10000 ~ 22000	40	40	35	30	30	25	20	-	-	-
		≥ 27000	50	40	35	35	30	25	-	-	-	-
Low Temperature Characteristics at 120Hz	Z ratio max.	V_R (V DC)	10 ~ 16		25	35	50 ~ 100		160 ~ 250		315 ~ 350	400 ~ 500
		Z-25°C/Z+20°C	4		3	3	3		4		8	8
		Z-40°C/Z+20°C	15		10	8	6		8		12	-

Lifetime Test		$V_R \le 100V$	$V_R > 100V$
Useful Life 105°C (V_R & I_R applied)	Test	**5 000 hours**	**8 000 hours**
	△C/C_R	≤ ±30% of initial measured value	≤ ±20% of initial measured value
	tanδ	≤ 300% of initial specified value	≤ 200% of initial specified value
	I_{Leak}	≤ the initial specified value	≤ the initial specified value
	Deviation Rate @ Useful Life: 10 000 FIT = 1%/1000h with 60% confidence level ▪ parts show higher drift as test criteria		
Endurance 105°C (V_R & I_R applied)	Test	**3 000 hours**	
	△C/C_R	≤ ±20% of initial measured value	≤ ±15% of initial measured value
	tanδ	≤ 200% of initial specified value	≤ 175% of initial specified value
	I_{Leak}	≤ the initial specified value	≤ the initial specified value
Shelf Life 105°C (V_R = 0)	Test	**1 000 hours**	
	△C/C_R	≤ ±20% of initial measured value	≤ ±15% of initial measured value
	tanδ	≤ 200% of initial specified value	≤ 175% of initial specified value
	I_{Leak}	≤ the initial specified value	≤ the initial specified value
	Before measurement: Restore capacitor to 20°C, apply V_R for 30 min according JIS-C-5101-4		
Vibration Resistance Test	Max. 10g force, f_{RANGE} 10Hz … 55Hz, amplitude 0.75mm; X/Y/Z-axis each 2h; capacitor rigidly clamped by body to surface ▪ IEC 60068-2-6		

For further information please contact sales@capxon.org

STANDARD RATINGS

V_R (V)	C_R (µF)	ø D (mm)	L (mm)	Typ. ESR +20°C ▪ 120Hz (mΩ)	Max. ESR +20°C ▪ 120Hz (mΩ)	I_R ▪ Max. Ripple Current +105°C ▪ 120Hz (mA rms)	CapXon Part Number
10	4700	22	25	76	99	860	HU472M010M250A □□
	6800	22	25	53	68	1310	HU682M010M250A □□
	8200	25	20	44	57	1600	HU822M010N200A □□
	10000	25	20	36	46	1810	HU103M010N200A □□
	12000	22	30	34	44	2110	HU123M010M300A □□
	15000	22	35	27	35	2310	HU153M010M350A □□
	18000	22	40	23	29	2400	HU183M010M400A □□
	22000	25	35	19	24	2600	HU223M010N350A □□
	27000	35	25	19	25	3110	HU273M010P250A □□
	33000	35	30	15	20	3420	HU333M010P300A □□
	39000	35	30	13	17	3700	HU393M010P300A □□
	47000	35	35	11	14	4210	HU473M010P350A □□
	56000	35	40	9	12	5100	HU563M010P400A □□
	68000	35	50	8	10	5510	HU683M010P500A □□
16	3300	22	25	110	140	1300	HU332M016M250A □□
	4700	22	25	76	99	1520	HU472M016M250A □□
	6800	22	25	53	68	1810	HU682M016M250A □□
	8200	22	30	44	57	2050	HU822M016M300A □□
	10000	22	30	36	46	2150	HU103M016M300A □□
	10000	25	25	36	46	2200	HU103M016N250A □□
	12000	22	35	34	44	2310	HU123M016M350A □□
	12000	25	30	34	44	2320	HU123M016N300A □□
	12000	30	25	34	44	2400	HU123M016O250A □□
	15000	22	40	27	35	2700	HU153M016M400A □□
	15000	25	35	27	35	2710	HU153M016N350A □□
	15000	30	30	27	35	2730	HU153M016O300A □□
	18000	22	45	23	29	2980	HU183M016M450A □□
	18000	25	40	23	29	3170	HU183M016N400A □□
	18000	30	30	23	29	3200	HU183M016O300A □□
	22000	25	45	19	24	3410	HU223M016N450A □□
	22000	30	35	19	24	3420	HU223M016O350A □□
	22000	35	30	19	24	3430	HU223M016P300A □□
	27000	25	50	15	20	3850	HU273M016N500A □□
	27000	30	40	15	20	3860	HU273M016O400A □□
	27000	35	30	15	20	3870	HU273M016P300A □□
	33000	30	45	12	16	4400	HU333M016O450A □□
	33000	35	35	12	16	4420	HU333M016P350A □□
	39000	30	50	10	14	4820	HU393M016O500A □□
	39000	35	40	10	14	4830	HU393M016P400A □□
	47000	35	45	9	11	5540	HU473M016P450A □□
	56000	35	50	7	10	5900	HU563M016P500A □□
	68000	35	60	6	8	6600	HU683M016P600A □□
	82000	40	60	5	7	7660	HU823M016Q600A □□

□□ See description at end of standard ratings

For further information please contact sales@capxon.org

STANDARD RATINGS

V_R (V)	C_R (µF)	ø D (mm)	L (mm)	Typ. ESR +20°C ▪ 120Hz (mΩ)	Max. ESR +20°C ▪ 120Hz (mΩ)	I_R ▪ Max. Ripple Current +105°C ▪ 120Hz (mA rms)	CapXon Part Number
25	2200	22	25	140	180	1300	HU222M025M250A □□
	3300	22	25	92	120	1310	HU332M025M250A □□
	4700	22	25	65	85	1620	HU472M025M250A □□
	5600	22	30	55	71	1800	HU562M025M300A □□
	6800	25	25	45	59	1920	HU682M025N250A □□
	8200	22	35	37	49	2150	HU822M025M350A □□
	8200	30	25	37	49	2300	HU822M025O250A □□
	10000	22	40	31	40	2500	HU103M025M400A □□
	10000	25	30	31	40	2500	HU103M025N300A □□
	10000	30	30	31	40	2680	HU103M025O300A □□
	12000	22	45	30	39	2760	HU123M025M450A □□
	12000	25	40	30	39	2810	HU123M025N400A □□
	12000	30	30	30	39	2820	HU123M025O300A □□
	15000	25	45	24	31	3280	HU153M025N450A □□
	15000	30	35	24	31	3290	HU153M025O350A □□
	15000	35	30	24	31	3300	HU153M025P300A □□
	18000	25	50	20	26	3550	HU183M025N500A □□
	18000	30	40	20	26	3560	HU183M025O400A □□
	22000	30	45	16	21	4250	HU223M025O450A □□
	22000	35	35	16	21	4260	HU223M025P350A □□
	27000	35	45	13	17	4760	HU273M025P450A □□
	33000	35	50	11	14	5500	HU333M025P500A □□
35	2200	25	25	120	150	1520	HU222M035N250A □□
	3300	22	25	77	100	1530	HU332M035M250A □□
	3900	22	30	65	85	1700	HU392M035M300A □□
	4700	22	35	54	71	2030	HU472M035M350A □□
	4700	25	25	54	71	2040	HU472M035N250A □□
	5600	22	35	46	59	2130	HU562M035M350A □□
	5600	25	30	46	59	2140	HU562M035N300A □□
	5600	30	25	46	59	2150	HU562M035O250A □□
	6800	22	40	38	49	2600	HU682M035M400A □□
	6800	25	35	38	49	2600	HU682M035N350A □□
	6800	30	25	38	49	2550	HU682M035O250A □□
	8200	22	50	31	40	2850	HU822M035M500A □□
	8200	25	40	31	40	2860	HU822M035N400A □□
	8200	30	30	31	40	2870	HU822M035O300A □□
	10000	25	45	26	33	3070	HU103M035N450A □□
	10000	30	35	26	33	3080	HU103M035O350A □□
	12000	25	50	26	33	3370	HU123M035N500A □□
	12000	30	40	26	33	3380	HU123M035O400A □□
	12000	35	30	26	33	3400	HU123M035P300A □□
	15000	30	45	20	27	3750	HU153M035O450A □□
	15000	35	35	20	27	3760	HU153M035P350A □□
	18000	35	40	17	22	4370	HU183M035P400A □□
	22000	35	50	14	18	4950	HU223M035P500A □□

□□ See description at end of standard ratings

For further information please contact sales@capxon.org

STANDARD RATINGS

V_R (V)	C_R (µF)	ø D (mm)	L (mm)	Typ. ESR +20°C ▪ 120Hz (mΩ)	Max. ESR +20°C ▪ 120Hz (mΩ)	I_R ▪ Max. Ripple Current +105°C ▪ 120Hz (mA rms)	CapXon Part Number
50	1500	25	20	140	180	1150	HU152M050N200A □□
	1800	22	25	120	150	1350	HU182M050M250A □□
	2200	22	25	92	120	1550	HU222M050M250A □□
	2700	22	30	76	98	1750	HU272M050M300A □□
	2700	25	25	76	98	1760	HU272M050N250A □□
	3300	22	35	62	80	1990	HU332M050M350A □□
	3300	25	30	62	80	2000	HU332M050N300A □□
	3900	22	40	52	68	2250	HU392M050M400A □□
	3900	30	25	52	68	2260	HU392M050O250A □□
	4700	22	45	43	56	2560	HU472M050M450A □□
	4700	25	35	43	56	2620	HU472M050N350A □□
	4700	30	30	43	56	2630	HU472M050O300A □□
	5600	22	50	36	47	2890	HU562M050M500A □□
	5600	25	40	36	47	2900	HU562M050N400A □□
	5600	30	30	36	47	2950	HU562M050O300A □□
	6800	25	45	30	39	3370	HU682M050N450A □□
	6800	30	35	30	39	3390	HU682M050O350A □□
	6800	35	30	30	39	3400	HU682M050P300A □□
	8200	30	40	25	32	3710	HU822M050O400A □□
	8200	35	35	25	32	3720	HU822M050P350A □□
	10000	30	50	20	27	4090	HU103M050O500A □□
	10000	35	40	20	27	4100	HU103M050P400A □□
	12000	35	45	26	33	4560	HU123M050P450A □□
	15000	35	50	20	27	4770	HU153M050P500A □□
63	1000	22	25	210	270	1170	HU102M063M250A □□
	1200	22	25	170	220	1250	HU122M063M250A □□
	1500	22	30	140	180	1480	HU152M063M300A □□
	1500	25	25	140	180	1500	HU152M063N250A □□
	1800	22	30	120	150	1590	HU182M063M300A □□
	1800	25	25	120	150	1600	HU182M063N250A □□
	2200	22	35	92	120	1830	HU222M063M350A □□
	2200	25	30	92	120	1840	HU222M063N300A □□
	2700	22	40	76	98	2050	HU272M063M400A □□
	2700	25	35	76	98	2050	HU272M063N350A □□
	2700	30	25	76	98	2030	HU272M063O250A □□
	3300	22	45	62	80	2330	HU332M063M450A □□
	3300	30	30	62	80	2400	HU332M063O300A □□
	3900	25	40	52	68	2540	HU392M063N400A □□
	3900	30	35	52	68	2570	HU392M063O350A □□
	4700	25	50	43	56	2980	HU472M063N500A □□
	4700	30	40	43	56	3020	HU472M063O400A □□
	4700	35	30	43	56	3050	HU472M063P300A □□
	5600	30	40	36	47	3280	HU562M063O400A □□
	5600	35	35	36	47	3310	HU562M063P350A □□

□□ See description at end of standard ratings

For further information please contact sales@capxon.org

STANDARD RATINGS

V_R (V)	C_R (µF)	ø D (mm)	L (mm)	Typ. ESR +20°C ▪ 120Hz (mΩ)	Max. ESR +20°C ▪ 120Hz (mΩ)	I_R ▪ Max. Ripple Current +105°C ▪ 120Hz (mA rms)	CapXon Part Number
63	6800	30	50	30	39	3730	HU682M063O500A □□
	6800	35	40	30	39	3750	HU682M063P400A □□
	8200	35	45	25	32	4200	HU822M063P450A □□
	10000	35	50	20	27	4700	HU103M063P500A □□
80	680	22	25	220	290	1000	HU681M080M250A □□
	820	22	25	180	240	1150	HU821M080M250A □□
	1000	22	25	150	200	1290	HU102M080M250A □□
	1200	22	30	130	170	1630	HU122M080M300A □□
	1200	25	25	130	170	1650	HU122M080N250A □□
	1500	22	30	100	130	1750	HU152M080M300A □□
	1500	25	25	100	130	1760	HU152M080N250A □□
	1800	22	35	85	110	1830	HU182M080M350A □□
	1800	25	30	85	110	1860	HU182M080N300A □□
	1800	30	25	85	110	1870	HU182M080O250A □□
	2200	22	40	70	90	2090	HU222M080M400A □□
	2200	25	35	70	90	2100	HU222M080N350A □□
	2200	30	25	70	90	2110	HU222M080O250A □□
	2700	25	40	57	74	2430	HU272M080N400A □□
	2700	30	30	57	74	2440	HU272M080O300A □□
	3300	25	45	46	60	2760	HU332M080N450A □□
	3300	30	35	46	60	2790	HU332M080O350A □□
	3300	35	30	46	60	2800	HU332M080P300A □□
	3900	25	50	39	51	3090	HU392M080N500A □□
	3900	30	40	39	51	3120	HU392M080O400A □□
	3900	35	30	39	51	3130	HU392M080P300A □□
	4700	30	45	33	42	3520	HU472M080O450A □□
	4700	35	35	33	42	3530	HU472M080P350A □□
	5600	30	50	27	36	3800	HU562M080O500A □□
	5600	35	40	27	36	3870	HU562M080P400A □□
	6800	35	45	23	29	4190	HU682M080P450A □□
100	330	22	20	460	600	800	HU331M100M200A □□
	470	22	25	320	420	920	HU471M100M250A □□
	470	25	20	320	420	1000	HU471M100N200A □□
	560	22	25	280	360	1100	HU561M100M250A □□
	680	22	30	220	290	1220	HU681M100M300A □□
	680	25	25	220	290	1240	HU681M100N250A □□
	820	22	30	180	240	1880	HU821M100M300A □□
	820	25	25	180	240	1960	HU821M100N250A □□
	1000	22	30	150	200	1930	HU102M100M300A □□
	1000	25	25	150	200	1920	HU102M100N250A □□
	1200	22	40	130	170	2080	HU122M100M400A □□
	1200	25	30	130	170	2080	HU122M100N300A □□
	1200	30	25	130	170	2080	HU122M100O250A □□
	1500	22	45	100	130	2150	HU152M100M450A □□

□□ See description at end of standard ratings

For further information please contact sales@capxon.org

STANDARD RATINGS

V_R (V)	C_R (µF)	ø D (mm)	L (mm)	Typ. ESR +20°C ▪ 120Hz (mΩ)	Max. ESR +20°C ▪ 120Hz (mΩ)	I_R ▪ Max. Ripple Current +105°C ▪ 120Hz (mA rms)	CapXon Part Number
100	1500	25	35	100	130	2150	HU152M100N350A □□
	1500	30	30	100	130	2150	HU152M100O300A □□
	1500	35	25	100	130	2150	HU152M100P250A □□
	1800	25	40	85	110	2370	HU182M100N400A □□
	1800	30	35	85	110	2370	HU182M100O350A □□
	2200	25	50	70	90	2650	HU222M100N500A □□
	2200	30	35	70	90	2610	HU222M100O350A □□
	2200	35	30	70	90	2750	HU222M100P300A □□
	2700	25	50	57	74	2760	HU272M100N500A □□
	2700	30	45	57	74	2960	HU272M100O450A □□
	2700	35	35	57	74	2960	HU272M100P350A □□
	3300	30	50	46	60	3340	HU332M100O500A □□
	3300	35	40	46	60	3340	HU332M100P400A □□
	3900	35	45	39	51	3690	HU392M100P450A □□
	4700	35	50	33	42	4150	HU472M100P500A □□
160	220	20	25	470	900	810	HU221M160L250A □□
	220	22	20	470	900	780	HU221M160M200A □□
	270	22	25	390	740	1010	HU271M160M250A □□
	270	25	20	390	740	1010	HU271M160N200A □□
	330	22	25	320	600	1170	HU331M160M250A □□
	330	25	20	320	600	1170	HU331M160N200A □□
	390	22	30	270	510	1430	HU391M160M300A □□
	390	25	25	270	510	1430	HU391M160N250A □□
	470	22	30	220	420	1520	HU471M160M300A □□
	470	25	25	220	420	1520	HU471M160N250A □□
	470	30	20	220	420	1530	HU471M160O200A □□
	680	22	40	150	290	1530	HU681M160M400A □□
	680	25	30	150	290	1530	HU681M160N300A □□
	680	30	25	150	290	1530	HU681M160O250A □□
	680	35	20	150	290	1560	HU681M160P200A □□
	820	22	45	130	240	1960	HU821M160M450A □□
	820	25	35	130	240	1960	HU821M160N350A □□
	820	30	30	130	240	1960	HU821M160O300A □□
	820	35	25	130	240	1960	HU821M160P250A □□
	1000	25	40	110	200	2230	HU102M160N400A □□
	1200	25	45	89	170	2400	HU122M160N450A □□
	1200	30	35	89	170	2400	HU122M160O350A □□
	1200	35	30	89	170	2400	HU122M160P300A □□
	1500	25	50	68	130	2600	HU152M160N500A □□
	1500	30	40	68	130	2600	HU152M160O400A □□
	1500	35	30	68	130	2600	HU152M160P300A □□
	1800	30	45	58	110	2820	HU182M160O450A □□
	1800	35	35	58	110	2820	HU182M160P350A □□
	2200	30	50	48	90	3320	HU222M160O500A □□

□□ See description at end of standard ratings

For further information please contact sales@capxon.org

STANDARD RATINGS

V_R (V)	C_R (µF)	ø D (mm)	L (mm)	Typ. ESR +20°C ▪ 120Hz (mΩ)	Max. ESR +20°C ▪ 120Hz (mΩ)	I_R ▪ Max. Ripple Current +105°C ▪ 120Hz (mA rms)	CapXon Part Number
160	2200	35	45	48	90	3500	HU222M160P450A □□
	2700	35	50	39	74	3780	HU272M160P500A □□
	3300	35	55	32	60	3860	HU332M160P550A □□
180	180	22	20	580	1110	760	HU181M180M200A □□
	220	25	20	470	900	900	HU221M180N200A □□
	270	22	25	390	740	1020	HU271M180M250A □□
	270	25	20	390	740	1030	HU271M180N200A □□
	330	20	30	320	600	1200	HU331M180L300A □□
	330	22	25	320	600	1200	HU331M180M250A □□
	330	25	20	320	600	1220	HU331M180N200A □□
	390	22	30	270	510	1320	HU391M180M300A □□
	390	25	25	270	510	1350	HU391M180N250A □□
	390	30	20	270	510	1350	HU391M180O200A □□
	470	22	35	220	420	1530	HU471M180M350A □□
	470	25	30	220	420	1540	HU471M180N300A □□
	470	30	25	220	420	1550	HU471M180O250A □□
	560	22	40	190	360	1670	HU561M180M400A □□
	560	25	30	190	360	1670	HU561M180N300A □□
	560	30	25	190	360	1670	HU561M180O250A □□
	560	35	20	190	360	1670	HU561M180P200A □□
	680	22	45	150	290	1780	HU681M180M450A □□
	680	25	35	150	290	1780	HU681M180N350A □□
	680	30	30	150	290	1780	HU681M180O300A □□
	680	35	25	150	290	1780	HU681M180P250A □□
	820	22	50	130	240	2090	HU821M180M500A □□
	820	25	40	130	240	2090	HU821M180N400A □□
	820	30	30	130	240	2090	HU821M180O300A □□
	820	35	25	130	240	2090	HU821M180P250A □□
	1000	22	50	110	200	2150	HU102M180M500A □□
	1000	25	45	110	200	2150	HU102M180N450A □□
	1000	30	35	110	200	2150	HU102M180O350A □□
	1000	35	30	110	200	2150	HU102M180P300A □□
	1200	22	60	89	170	2220	HU122M180M600A □□
	1200	25	50	89	170	2220	HU122M180N500A □□
	1200	30	40	89	170	2220	HU122M180O400A □□
	1200	35	30	89	170	2220	HU122M180P300A □□
	1500	25	50	68	130	2240	HU152M180N500A □□
	1500	30	45	68	130	2240	HU152M180O450A □□
	1500	35	35	68	130	2240	HU152M180P350A □□
	1800	30	50	58	110	2880	HU182M180O500A □□
	1800	35	35	58	110	2880	HU182M180P350A □□
	1800	35	40	58	110	2940	HU182M180P400A □□
	2200	30	55	48	90	3120	HU222M180O550A □□
	2200	35	45	48	90	3120	HU222M180P450A □□

□□ See description at end of standard ratings

For further information please contact sales@capxon.org

STANDARD RATINGS

V_R (V)	C_R (µF)	ø D (mm)	L (mm)	Typ. ESR +20°C ▪ 120Hz (mΩ)	Max. ESR +20°C ▪ 120Hz (mΩ)	I_R ▪ Max. Ripple Current +105°C ▪ 120Hz (mA rms)	CapXon Part Number
180	2200	35	50	48	90	3230	HU222M180P500A □□
	2200	35	55	48	90	3320	HU222M180P550A □□
	2700	35	50	39	74	3810	HU272M180P500A □□
200	150	20	20	700	1330	740	HU151M200L200A □□
	180	22	20	580	1110	760	HU181M200M200A □□
	220	20	25	470	900	1010	HU221M200L250A □□
	220	22	25	470	900	1050	HU221M200M250A □□
	220	25	20	470	900	1060	HU221M200N200A □□
	270	20	25	390	740	1070	HU271M200L250A □□
	270	22	25	390	740	1110	HU271M200M250A □□
	330	20	30	320	600	1210	HU331M200L300A □□
	330	22	30	320	600	1260	HU331M200M300A □□
	330	25	25	320	600	1270	HU331M200N250A □□
	390	20	35	270	510	1350	HU391M200L350A □□
	390	22	25	270	510	1350	HU391M200M250A □□
	390	22	30	270	510	1360	HU391M200M300A □□
	390	25	25	270	510	1370	HU391M200N250A □□
	470	20	40	220	420	1550	HU471M200L400A □□
	470	22	30	220	420	1560	HU471M200M300A □□
	470	22	35	220	420	1570	HU471M200M350A □□
	470	25	30	220	420	1580	HU471M200N300A □□
	470	30	25	220	420	1590	HU471M200O250A □□
	560	20	45	190	360	1730	HU561M200L450A □□
	560	22	35	190	360	1730	HU561M200M350A □□
	560	22	40	190	360	1770	HU561M200M400A □□
	560	25	30	190	360	1770	HU561M200N300A □□
	560	30	25	190	360	1770	HU561M200O250A □□
	680	22	40	150	290	2120	HU681M200M400A □□
	680	22	45	150	290	2150	HU681M200M450A □□
	680	25	35	150	290	2150	HU681M200N350A □□
	680	30	30	150	290	2150	HU681M200O300A □□
	680	35	25	150	290	2150	HU681M200P250A □□
	820	22	50	130	240	2190	HU821M200M500A □□
	820	25	45	130	240	2190	HU821M200N450A □□
	820	30	25	130	240	2200	HU821M200O250A □□
	820	30	30	130	240	2240	HU821M200O300A □□
	820	35	25	130	240	2240	HU821M200P250A □□
	1000	25	40	110	200	2240	HU102M200N400A □□
	1000	30	30	110	200	2240	HU102M200O300A □□
	1000	30	35	110	200	2500	HU102M200O350A □□
	1000	35	30	110	200	2500	HU102M200P300A □□
	1200	25	50	89	170	2950	HU122M200N500A □□
	1200	30	35	89	170	2700	HU122M200O350A □□
	1200	30	40	89	170	2950	HU122M200O400A □□

□□ See description at end of standard ratings

For further information please contact sales@capxon.org

STANDARD RATINGS

V_R (V)	C_R (µF)	ø D (mm)	L (mm)	Typ. ESR +20°C ▪ 120Hz (mΩ)	Max. ESR +20°C ▪ 120Hz (mΩ)	I_R ▪ Max. Ripple Current +105°C ▪ 120Hz (mA rms)	CapXon Part Number
200	1200	35	30	89	170	2950	HU122M200P300A □□
	1200	35	35	89	170	3130	HU122M200P350A □□
	1500	30	50	68	130	3200	HU152M200O500A □□
	1500	35	40	68	130	3200	HU152M200P400A □□
	1800	30	50	58	110	3300	HU182M200O500A □□
	1800	35	40	58	110	3300	HU182M200P400A □□
	1800	35	45	58	110	3550	HU182M200P450A □□
	2200	35	45	48	90	3850	HU222M200P450A □□
	2200	35	50	48	90	4000	HU222M200P500A □□
	2700	35	55	39	74	4300	HU272M200P550A □□
220	150	20	20	700	1330	710	HU151M220L200A □□
	180	22	20	580	1110	770	HU181M220M200A □□
	220	20	30	470	900	1070	HU221M220L300A □□
	220	22	25	470	900	1070	HU221M220M250A □□
	270	20	35	390	740	1160	HU271M220L350A □□
	270	22	30	390	740	1170	HU271M220M300A □□
	270	25	25	390	740	1180	HU271M220N250A □□
	330	20	35	320	600	1270	HU331M220L350A □□
	330	22	35	320	600	1280	HU331M220M350A □□
	330	25	25	320	600	1280	HU331M220N250A □□
	330	30	20	320	600	1300	HU331M220O200A □□
	390	20	40	270	510	1350	HU391M220L400A □□
	390	22	35	270	510	1410	HU391M220M350A □□
	390	25	30	270	510	1420	HU391M220N300A □□
	470	20	45	220	420	1630	HU471M220L450A □□
	470	22	40	220	420	1650	HU471M220M400A □□
	470	25	35	220	420	1650	HU471M220N350A □□
	470	30	25	220	420	1640	HU471M220O250A □□
	560	22	40	190	360	1790	HU561M220M400A □□
	560	22	45	190	360	1810	HU561M220M450A □□
	560	25	40	190	360	1830	HU561M220N400A □□
	560	30	30	190	360	1840	HU561M220O300A □□
	680	25	45	150	290	2230	HU681M220N450A □□
	680	30	35	150	290	2230	HU681M220O350A □□
	680	35	25	150	290	2230	HU681M220P250A □□
	820	25	50	130	240	2250	HU821M220N500A □□
	820	30	40	130	240	2250	HU821M220O400A □□
	820	35	30	130	240	2250	HU821M220P300A □□
	1000	25	55	110	200	2280	HU102M220N550A □□
	1000	30	45	110	200	2280	HU102M220O450A □□
	1000	35	35	110	200	2280	HU102M220P350A □□
	1200	30	50	89	170	2320	HU122M220O500A □□
	1200	35	40	89	170	2320	HU122M220P400A □□
	1500	30	55	68	130	3130	HU152M220O550A □□
	1500	35	45	68	130	3230	HU152M220P450A □□

□□ See description at end of standard ratings

For further information please contact sales@capxon.org

STANDARD RATINGS

V_R (V)	C_R (µF)	ø D (mm)	L (mm)	Typ. ESR +20°C ▪ 120Hz (mΩ)	Max. ESR +20°C ▪ 120Hz (mΩ)	I_R ▪ Max. Ripple Current +105°C ▪ 120Hz (mA rms)	CapXon Part Number
220	1800	35	50	58	110	3890	HU182M220P500A □□
	2200	35	60	48	90	3950	HU222M220P600A □□
250	150	20	20	700	1330	670	HU151M250L200A □□
	150	22	25	700	1330	760	HU151M250M250A □□
	150	25	20	700	1330	770	HU151M250N200A □□
	180	22	25	580	1110	790	HU181M250M250A □□
	180	25	25	580	1110	910	HU181M250N250A □□
	220	22	25	470	900	1110	HU221M250M250A □□
	220	25	25	470	900	1120	HU221M250N250A □□
	270	22	30	390	740	1220	HU271M250M300A □□
	270	25	30	390	740	1250	HU271M250N300A □□
	270	30	25	390	740	1250	HU271M250O250A □□
	330	22	35	320	600	1440	HU331M250M350A □□
	330	25	25	320	600	1430	HU331M250N250A □□
	330	25	30	320	600	1450	HU331M250N300A □□
	330	30	25	320	600	1450	HU331M250O250A □□
	390	22	35	270	510	1720	HU391M250M350A □□
	390	22	40	270	510	1750	HU391M250M400A □□
	390	25	35	270	510	1770	HU391M250N350A □□
	390	30	25	270	510	1780	HU391M250O250A □□
	470	22	40	220	420	1850	HU471M250M400A □□
	470	22	45	220	420	1860	HU471M250M450A □□
	470	25	40	220	420	1870	HU471M250N400A □□
	470	30	35	220	420	1880	HU471M250O350A □□
	470	35	30	220	420	1890	HU471M250P300A □□
	560	22	45	190	360	2160	HU561M250M450A □□
	560	25	45	190	360	2170	HU561M250N450A □□
	560	30	30	190	360	2180	HU561M250O300A □□
	560	35	25	190	360	2190	HU561M250P250A □□
	680	22	50	150	290	2250	HU681M250M500A □□
	680	25	40	150	290	2250	HU681M250N400A □□
	680	30	30	150	290	2250	HU681M250O300A □□
	680	30	35	150	290	2400	HU681M250O350A □□
	680	35	30	150	290	2400	HU681M250P300A □□
	820	25	50	130	240	2520	HU821M250N500A □□
	820	30	40	130	240	2520	HU821M250O400A □□
	820	35	35	130	240	2520	HU821M250P350A □□
	1000	30	40	110	200	2750	HU102M250O400A □□
	1000	30	50	110	200	2880	HU102M250O500A □□
	1000	35	40	110	200	2880	HU102M250P400A □□
	1200	30	50	89	170	3150	HU122M250O500A □□
	1200	30	60	89	170	3350	HU122M250O600A □□
	1200	35	45	89	170	3280	HU122M250P450A □□
	1500	35	45	68	130	3760	HU152M250P450A □□
	1800	35	50	58	110	4060	HU182M250P500A □□

□□ See description at end of standard ratings

For further information please contact sales@capxon.org

STANDARD RATINGS

V_R (V)	C_R (µF)	ø D (mm)	L (mm)	Typ. ESR +20°C ▪ 120Hz (mΩ)	Max. ESR +20°C ▪ 120Hz (mΩ)	I_R ▪ Max. Ripple Current +105°C ▪ 120Hz (mA rms)	CapXon Part Number
315	68	22	20	1540	2930	480	HU680M315M200A □□
	82	22	20	1280	2430	520	HU820M315M200A □□
	100	25	20	1050	1990	580	HU101M315N200A □□
	120	22	25	870	1660	760	HU121M315M250A □□
	120	30	20	870	1660	770	HU121M315O200A □□
	150	22	30	700	1330	830	HU151M315M300A □□
	150	25	25	700	1330	850	HU151M315N250A □□
	150	30	20	700	1330	860	HU151M315O200A □□
	180	22	30	580	1110	930	HU181M315M300A □□
	180	25	25	580	1110	950	HU181M315N250A □□
	220	22	40	470	900	1170	HU221M315M400A □□
	220	25	30	470	900	1140	HU221M315N300A □□
	220	30	25	470	900	1140	HU221M315O250A □□
	270	22	45	390	740	1280	HU271M315M450A □□
	270	25	35	390	740	1260	HU271M315N350A □□
	270	30	25	390	740	1270	HU271M315O250A □□
	330	22	50	320	600	1490	HU331M315M500A □□
	330	25	40	320	600	1490	HU331M315N400A □□
	330	30	30	320	600	1490	HU331M315O300A □□
	330	35	25	320	600	1490	HU331M315P250A □□
	390	25	45	270	510	1860	HU391M315N450A □□
	390	30	35	270	510	1860	HU391M315O350A □□
	390	35	30	270	510	1860	HU391M315P300A □□
	470	25	50	220	420	1960	HU471M315N500A □□
	470	30	40	220	420	1970	HU471M315O400A □□
	470	35	35	220	420	1990	HU471M315P350A □□
	560	30	45	190	360	2350	HU561M315O450A □□
	560	35	35	190	360	2360	HU561M315P350A □□
	680	30	50	150	290	2370	HU681M315O500A □□
	680	35	40	150	290	2370	HU681M315P400A □□
	820	35	45	130	240	2380	HU821M315P450A □□
	1000	35	45	110	200	2460	HU102M315P450A □□
350	56	22	20	1870	3550	420	HU560M350M200A □□
	68	25	20	1540	2930	520	HU680M350N200A □□
	82	25	20	1280	2430	550	HU820M350N200A □□
	100	22	30	1050	1990	710	HU101M350M300A □□
	120	25	25	870	1660	770	HU121M350N250A □□
	120	30	20	870	1660	770	HU121M350O200A □□
	150	22	30	700	1330	870	HU151M350M300A □□
	150	25	25	700	1330	870	HU151M350N250A □□
	150	30	20	700	1330	890	HU151M350O200A □□
	180	22	35	580	1110	950	HU181M350M350A □□
	180	25	30	580	1110	960	HU181M350N300A □□
	180	30	25	580	1110	1050	HU181M350O250A □□

□□ See description at end of standard ratings

For further information please contact sales@capxon.org

STANDARD RATINGS

V_R (V)	C_R (µF)	ø D (mm)	L (mm)	Typ. ESR +20°C ▪ 120Hz (mΩ)	Max. ESR +20°C ▪ 120Hz (mΩ)	I_R ▪ Max. Ripple Current +105°C ▪ 120Hz (mA rms)	CapXon Part Number
350	220	22	45	470	900	1250	HU221M350M450A □□
	220	25	35	470	900	1260	HU221M350N350A □□
	220	35	25	470	900	1280	HU221M350P250A □□
	270	22	50	390	740	1300	HU271M350M500A □□
	270	25	40	390	740	1310	HU271M350N400A □□
	270	30	30	390	740	1310	HU271M350O300A □□
	270	35	25	390	740	1320	HU271M350P250A □□
	330	25	45	320	600	1520	HU331M350N450A □□
	330	30	35	320	600	1540	HU331M350O350A □□
	330	35	30	320	600	1550	HU331M350P300A □□
	390	25	50	270	510	1940	HU391M350N500A □□
	390	30	35	270	510	1880	HU391M350O350A □□
	390	35	30	270	510	1880	HU391M350P300A □□
	470	25	50	220	420	2100	HU471M350N500A □□
	470	30	40	220	420	2100	HU471M350O400A □□
	470	35	40	220	420	2100	HU471M350P400A □□
	560	30	45	190	360	2390	HU561M350O450A □□
	560	35	40	190	360	2390	HU561M350P400A □□
	680	30	50	150	290	2400	HU681M350O500A □□
	680	35	40	150	290	2410	HU681M350P400A □□
	820	35	45	130	240	2450	HU821M350P450A □□
385	33	22	20	3170	6030	200	HU330M385M200A □□
	39	20	20	2680	5100	350	HU390M385L200A □□
	56	22	20	1870	3550	430	HU560M385M200A □□
	68	22	25	1540	2930	520	HU680M385M250A □□
	68	25	20	1540	2930	520	HU680M385N200A □□
	82	22	25	1280	2430	640	HU820M385M250A □□
	82	25	20	1280	2430	640	HU820M385N200A □□
	100	22	25	1050	1990	690	HU101M385M250A □□
	100	22	30	1050	1990	750	HU101M385M300A □□
	100	25	25	1050	1990	750	HU101M385N250A □□
	120	22	35	870	1660	800	HU121M385M350A □□
	120	25	25	870	1660	800	HU121M385N250A □□
	120	30	20	870	1660	800	HU121M385O200A □□
	150	22	35	700	1330	920	HU151M385M350A □□
	150	25	35	700	1330	920	HU151M385N350A □□
	150	30	30	700	1330	920	HU151M385O300A □□
	180	22	35	580	1110	1220	HU181M385M350A □□
	180	22	40	580	1110	1250	HU181M385M400A □□
	180	25	30	580	1110	1320	HU181M385N300A □□
	180	30	30	580	1110	1340	HU181M385O300A □□
	180	35	25	580	1110	1340	HU181M385P250A □□
	270	30	30	390	740	1470	HU271M385O300A □□
	270	35	30	390	740	1480	HU271M385P300A □□

□□ See description at end of standard ratings

For further information please contact sales@capxon.org

STANDARD RATINGS

V_R (V)	C_R (µF)	ø D (mm)	L (mm)	Typ. ESR +20°C ▪ 120Hz (mΩ)	Max. ESR +20°C ▪ 120Hz (mΩ)	I_R ▪ Max. Ripple Current +105°C ▪ 120Hz (mA rms)	CapXon Part Number
385	390	25	50	270	510	1950	HU391M385N500A □□
	390	30	40	270	510	1950	HU391M385O400A □□
	390	35	30	270	510	1950	HU391M385P300A □□
	470	30	50	220	420	2320	HU471M385O500A □□
	470	35	35	220	420	2320	HU471M385P350A □□
	680	30	55	150	290	2550	HU681M385O550A □□
	680	35	50	150	290	2550	HU681M385P500A □□
	820	35	55	130	240	2650	HU821M385P550A □□
400	47	22	20	2230	4230	400	HU470M400M200A □□
	56	22	20	1870	3550	440	HU560M400M200A □□
	68	22	25	1540	2930	530	HU680M400M250A □□
	68	25	20	1540	2930	530	HU680M400N200A □□
	82	22	25	1280	2430	580	HU820M400M250A □□
	82	25	20	1280	2430	580	HU820M400N200A □□
	82	25	25	1280	2430	630	HU820M400N250A □□
	100	22	25	1050	1990	660	HU101M400M250A □□
	100	22	30	1050	1990	690	HU101M400M300A □□
	100	25	25	1050	1990	690	HU101M400N250A □□
	120	22	30	870	1660	760	HU121M400M300A □□
	120	22	35	870	1660	810	HU121M400M350A □□
	120	25	25	870	1660	810	HU121M400N250A □□
	120	25	30	870	1660	840	HU121M400N300A □□
	120	30	20	870	1660	810	HU121M400O200A □□
	120	30	25	870	1660	840	HU121M400O250A □□
	150	22	35	700	1330	900	HU151M400M350A □□
	150	22	40	700	1330	950	HU151M400M400A □□
	150	25	25	700	1330	900	HU151M400N250A □□
	150	25	30	700	1330	950	HU151M400N300A □□
	150	30	20	700	1330	900	HU151M400O200A □□
	150	30	25	700	1330	950	HU151M400O250A □□
	180	22	35	580	1110	990	HU181M400M350A □□
	180	22	40	580	1110	1050	HU181M400M400A □□
	180	22	45	580	1110	1100	HU181M400M450A □□
	180	25	30	580	1110	1050	HU181M400N300A □□
	180	25	35	580	1110	1100	HU181M400N350A □□
	180	30	30	580	1110	1050	HU181M400O300A □□
	180	35	25	580	1110	1050	HU181M400P250A □□
	220	22	45	470	900	1120	HU221M400M450A □□
	220	22	50	470	900	1160	HU221M400M500A □□
	220	25	35	470	900	1120	HU221M400N350A □□
	220	25	40	470	900	1160	HU221M400N400A □□
	220	25	45	470	900	1160	HU221M400N450A □□
	220	30	25	470	900	1120	HU221M400O250A □□
	220	30	30	470	900	1160	HU221M400O300A □□

□□ See description at end of standard ratings

For further information please contact sales@capxon.org

STANDARD RATINGS

V_R (V)	C_R (µF)	ø D (mm)	L (mm)	Typ. ESR +20°C ▪ 120Hz (mΩ)	Max. ESR +20°C ▪ 120Hz (mΩ)	I_R ▪ Max. Ripple Current +105°C ▪ 120Hz (mA rms)	CapXon Part Number
400	220	30	35	470	900	1190	HU221M400O350A □□
	220	35	25	470	900	1160	HU221M400P250A □□
	270	22	50	390	740	1290	HU271M400M500A □□
	270	25	40	390	740	1290	HU271M400N400A □□
	270	25	45	390	740	1320	HU271M400N450A □□
	270	25	50	390	740	1380	HU271M400N500A □□
	270	30	30	390	740	1290	HU271M400O300A □□
	270	30	35	390	740	1320	HU271M400O350A □□
	270	35	30	390	740	1380	HU271M400P300A □□
	330	25	45	320	600	1460	HU331M400N450A □□
	330	25	50	320	600	1530	HU331M400N500A □□
	330	30	35	320	600	1480	HU331M400O350A □□
	330	30	40	320	600	1550	HU331M400O400A □□
	330	35	30	320	600	1550	HU331M400P300A □□
	330	35	35	320	600	1590	HU331M400P350A □□
	390	25	45	270	510	1610	HU391M400N450A □□
	390	30	40	270	510	1670	HU391M400O400A □□
	390	30	45	270	510	1760	HU391M400O450A □□
	390	35	30	270	510	1670	HU391M400P300A □□
	390	35	35	270	510	1760	HU391M400P350A □□
	390	35	40	270	510	1830	HU391M400P400A □□
	470	30	45	220	420	1930	HU471M400O450A □□
	470	30	50	220	420	2020	HU471M400O500A □□
	470	35	30	220	420	1670	HU471M400P300A □□
	470	35	35	220	420	1930	HU471M400P350A □□
	470	35	40	220	420	2010	HU471M400P400A □□
	560	30	50	190	360	2210	HU561M400O500A □□
	560	35	40	190	360	2210	HU561M400P400A □□
	560	35	45	190	360	2300	HU561M400P450A □□
	560	35	50	190	360	2410	HU561M400P500A □□
	680	30	55	150	290	2530	HU681M400O550A □□
	680	35	40	150	290	2530	HU681M400P400A □□
	680	35	50	150	290	2650	HU681M400P500A □□
	820	35	55	130	240	2900	HU821M400P550A □□
	820	35	60	170	320	2950	HU821M400P600A □□
	1000	35	60	140	270	3000	HU102M400P600A □□
	1200	35	70	120	220	3120	HU122M400P700A □□
420	47	22	20	2050	3900	400	HU470M420M200A □□
	56	22	20	1700	3230	440	HU560M420M200A □□
	68	22	25	1700	3230	540	HU680M420M250A □□
	68	25	20	1390	2650	540	HU680M420N200A □□
	82	22	25	1390	2650	580	HU820M420M250A □□
	82	25	25	1390	2650	630	HU820M420N250A □□
	100	22	25	1390	2650	660	HU101M420M250A □□

□□ See description at end of standard ratings

For further information please contact sales@capxon.org

STANDARD RATINGS

V_R (V)	C_R (µF)	ø D (mm)	L (mm)	Typ. ESR +20°C ▪ 120Hz (mΩ)	Max. ESR +20°C ▪ 120Hz (mΩ)	I_R ▪ Max. Ripple Current +105°C ▪ 120Hz (mA rms)	CapXon Part Number
420	100	22	30	1160	2210	690	HU101M420M300A □□
	100	25	25	1160	2210	690	HU101M420N250A □□
	100	30	20	1160	2210	690	HU101M420O200A □□
	120	22	30	1160	2210	760	HU121M420M300A □□
	120	22	35	1160	2210	810	HU121M420M350A □□
	120	25	25	1160	2210	810	HU121M420N250A □□
	120	25	30	930	1770	830	HU121M420N300A □□
	120	30	25	930	1770	830	HU121M420O250A □□
	120	35	20	930	1770	830	HU121M420P200A □□
	150	22	35	930	1770	900	HU151M420M350A □□
	150	22	40	930	1770	960	HU151M420M400A □□
	150	25	30	770	1470	960	HU151M420N300A □□
	150	25	35	770	1470	970	HU151M420N350A □□
	150	30	25	770	1470	970	HU151M420O250A □□
	180	25	35	640	1210	1060	HU181M420N350A □□
	180	30	30	640	1210	1110	HU181M420O300A □□
	180	35	25	640	1210	1110	HU181M420P250A □□
	220	22	45	640	1210	1110	HU221M420M450A □□
	220	22	50	640	1210	1160	HU221M420M500A □□
	220	25	35	640	1210	1110	HU221M420N350A □□
	220	25	45	640	1210	1190	HU221M420N450A □□
	220	30	30	520	980	1120	HU221M420O300A □□
	220	30	35	520	980	1190	HU221M420O350A □□
	220	35	25	520	980	1190	HU221M420P250A □□
	270	25	40	520	980	1250	HU271M420N400A □□
	270	30	30	520	980	1250	HU271M420O300A □□
	270	30	35	520	980	1320	HU271M420O350A □□
	270	30	40	420	800	1390	HU271M420O400A □□
	270	35	25	420	800	1320	HU271M420P250A □□
	270	35	30	420	800	1390	HU271M420P300A □□
	330	25	50	420	800	1530	HU331M420N500A □□
	330	30	35	420	800	1460	HU331M420O350A □□
	330	30	40	420	800	1530	HU331M420O400A □□
	330	30	45	360	680	1620	HU331M420O450A □□
	330	35	30	360	680	1620	HU331M420P300A □□
	330	35	35	360	680	1630	HU331M420P350A □□
	390	30	40	360	680	1670	HU391M420O400A □□
	390	30	45	360	680	1760	HU391M420O450A □□
	390	30	50	290	560	1840	HU391M420O500A □□
	390	35	35	290	560	1770	HU391M420P350A □□
	390	35	40	290	560	1840	HU391M420P400A □□
	470	30	50	290	560	2020	HU471M420O500A □□
	470	30	60	250	470	2190	HU471M420O600A □□
	470	35	40	250	470	2010	HU471M420P400A □□

□□ See description at end of standard ratings

For further information please contact sales@capxon.org

STANDARD RATINGS

V_R (V)	C_R (µF)	ø D (mm)	L (mm)	Typ. ESR +20°C ▪ 120Hz (mΩ)	Max. ESR +20°C ▪ 120Hz (mΩ)	I_R ▪ Max. Ripple Current +105°C ▪ 120Hz (mA rms)	CapXon Part Number
420	470	35	45	210	390	2110	HU471M420P450A □□
	560	35	45	210	390	2300	HU561M420P450A □□
	560	35	50	170	320	2410	HU561M420P500A □□
	680	35	50	170	320	2410	HU681M420P500A □□
	680	35	55	170	320	2760	HU681M420P550A □□
	820	30	60	170	320	2900	HU821M420O600A □□
	820	35	55	140	270	2950	HU821M420P550A □□
	820	35	60	120	220	3000	HU821M420P600A □□
450	56	22	25	2490	4740	470	HU560M450M250A □□
	68	22	25	2050	3900	520	HU680M450M250A □□
	68	22	30	2050	3900	560	HU680M450M300A □□
	68	25	25	2050	3900	570	HU680M450N250A □□
	82	22	25	1700	3230	560	HU820M450M250A □□
	82	22	30	1700	3230	620	HU820M450M300A □□
	82	25	25	1700	3230	620	HU820M450N250A □□
	100	22	30	1390	2650	680	HU101M450M300A □□
	100	22	35	1390	2650	730	HU101M450M350A □□
	100	25	25	1390	2650	730	HU101M450N250A □□
	100	25	30	1390	2650	760	HU101M450N300A □□
	100	30	25	1390	2650	760	HU101M450O250A □□
	120	22	35	1160	2210	800	HU121M450M350A □□
	120	22	40	1160	2210	840	HU121M450M400A □□
	120	25	30	1160	2210	840	HU121M450N300A □□
	120	25	35	1160	2210	860	HU121M450N350A □□
	120	30	25	1160	2210	860	HU121M450O250A □□
	150	22	40	930	1770	940	HU151M450M400A □□
	150	22	45	930	1770	990	HU151M450M450A □□
	150	25	30	930	1770	940	HU151M450N300A □□
	150	25	35	930	1770	990	HU151M450N350A □□
	150	25	40	930	1770	1010	HU151M450N400A □□
	150	30	25	930	1770	990	HU151M450O250A □□
	150	30	30	930	1770	1010	HU151M450O300A □□
	150	35	25	930	1770	1010	HU151M450P250A □□
	180	25	35	770	1470	1050	HU181M450N350A □□
	180	25	40	770	1470	1110	HU181M450N400A □□
	180	25	45	770	1470	1180	HU181M450N450A □□
	180	30	30	770	1470	1120	HU181M450O300A □□
	180	30	35	770	1470	1180	HU181M450O350A □□
	180	35	25	770	1470	1180	HU181M450P250A □□
	220	22	50	640	1210	1160	HU221M450M500A □□
	220	25	40	640	1210	1160	HU221M450N400A □□
	220	25	45	640	1210	1190	HU221M450N450A □□
	220	25	50	640	1210	1250	HU221M450N500A □□
	220	30	30	640	1210	1160	HU221M450O300A □□

□□ See description at end of standard ratings

For further information please contact sales@capxon.org

STANDARD RATINGS

V_R (V)	C_R (µF)	ø D (mm)	L (mm)	Typ. ESR +20°C ▪ 120Hz (mΩ)	Max. ESR +20°C ▪ 120Hz (mΩ)	I_R ▪ Max. Ripple Current +105°C ▪ 120Hz (mA rms)	CapXon Part Number
450	220	30	35	640	1210	1190	HU221M450O350A □□
	220	30	40	640	1210	1250	HU221M450O400A □□
	220	35	25	640	1210	1190	HU221M450P250A □□
	220	35	30	640	1210	1250	HU221M450P300A □□
	270	25	50	520	980	1380	HU271M450N500A □□
	270	30	30	520	980	1180	HU271M450O300A □□
	270	30	35	520	980	1320	HU271M450O350A □□
	270	30	40	520	980	1390	HU271M450O400A □□
	270	30	45	520	980	1460	HU271M450O450A □□
	270	35	30	520	980	1400	HU271M450P300A □□
	270	35	35	520	980	1470	HU271M450P350A □□
	330	30	40	420	800	1540	HU331M450O400A □□
	330	30	45	420	800	1620	HU331M450O450A □□
	330	30	50	420	800	1690	HU331M450O500A □□
	330	35	35	420	800	1630	HU331M450P350A □□
	330	35	40	420	800	1700	HU331M450P400A □□
	390	30	50	360	680	1840	HU391M450O500A □□
	390	35	40	360	680	1860	HU391M450P400A □□
	390	35	45	360	680	1920	HU391M450P450A □□
	470	35	40	290	560	2010	HU471M450P400A □□
	470	35	45	290	560	2110	HU471M450P450A □□
	560	30	60	250	470	2390	HU561M450O600A □□
	560	35	50	250	470	2410	HU561M450P500A □□
	560	35	55	250	470	2510	HU561M450P550A □□
	680	35	50	210	390	2650	HU681M450P500A □□
	680	35	55	210	390	2760	HU681M450P550A □□
500	39	22	25	3580	6800	360	HU390M500M250A □□
	47	22	25	2970	5640	400	HU470M500M250A □□
	56	22	30	2490	4740	470	HU560M500M300A □□
	68	22	30	2050	3900	520	HU680M500M300A □□
	68	25	25	2050	3900	530	HU680M500N250A □□
	82	22	35	1700	3230	610	HU820M500M350A □□
	82	25	30	1700	3230	620	HU820M500N300A □□
	82	30	25	1700	3230	650	HU820M500O250A □□
	100	22	40	1390	2650	710	HU101M500M400A □□
	100	25	35	1390	2650	720	HU101M500N350A □□
	100	30	25	1390	2650	700	HU101M500O250A □□
	120	22	45	1160	2210	700	HU121M500M450A □□
	120	25	35	1160	2210	700	HU121M500N350A □□
	120	30	30	1160	2210	820	HU121M500O300A □□
	120	35	30	1160	2210	910	HU121M500P300A □□
	150	22	50	930	1770	960	HU151M500M500A □□
	150	25	45	930	1770	980	HU151M500N450A □□
	150	30	35	930	1770	980	HU151M500O350A □□

□□ See description at end of standard ratings

For further information please contact sales@capxon.org

STANDARD RATINGS

V_R (V)	C_R (µF)	ø D (mm)	L (mm)	Typ. ESR +20°C ▪ 120Hz (mΩ)	Max. ESR +20°C ▪ 120Hz (mΩ)	I_R ▪ Max. Ripple Current +105°C ▪ 120Hz (mA rms)	CapXon Part Number
500	150	35	30	930	1770	980	HU151M500P300A [ ][ ][ ]
	180	25	50	770	1470	1130	HU181M500N500A [ ][ ][ ]
	180	30	40	770	1470	1130	HU181M500O400A [ ][ ][ ]
	180	35	30	770	1470	1130	HU181M500P300A [ ][ ][ ]
	220	30	45	640	1210	1320	HU221M500O450A [ ][ ][ ]
	220	35	35	640	1210	1320	HU221M500P350A [ ][ ][ ]
	270	30	50	520	980	1530	HU271M500O500A [ ][ ][ ]
	270	35	40	520	980	1530	HU271M500P400A [ ][ ][ ]
	330	35	45	420	800	1770	HU331M500P450A [ ][ ][ ]
	390	35	50	360	680	1880	HU391M500P500A [ ][ ][ ]
	470	35	55	290	560	2200	HU471M500P550A [ ][ ][ ]

[ ][ ][ ]: Enter **P6** for standard type ▪ 6mm pin length
[ ][ ][ ]: Enter **Z6** for 3-pin type ▪ 6mm pin length
[ ][ ]: Enter **Y6** for multipin-type ▪ 6mm pin length
[ ][ ][ ]: Enter **P4** for standard type ▪ 4mm pin length
[ ][ ][ ]: Enter **Z4** for 3-pin type ▪ 4mm pin length
[ ][ ]: Enter **Y4** for multipin type ▪ 4mm pin length

DIMENSIONS ▪ All dimensions in mm

2-pin version ▪ Standard type

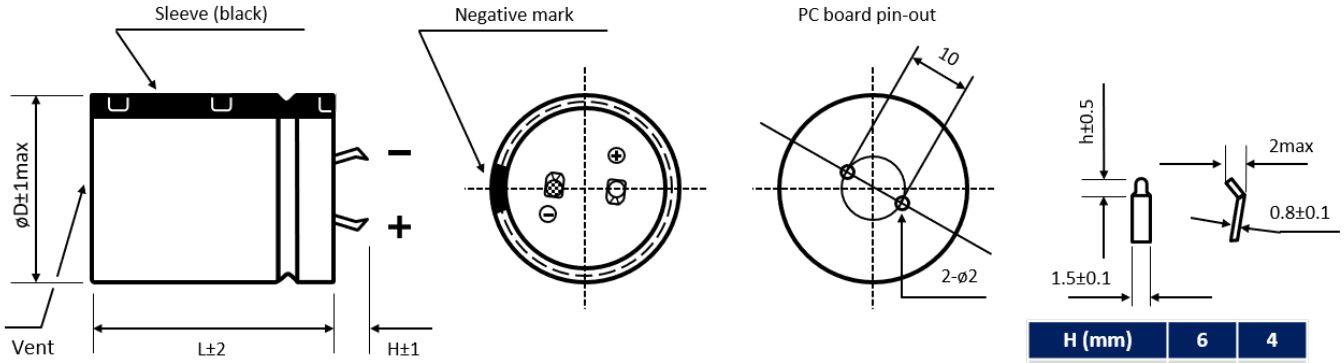

H (mm)	6	4
h (mm)	2.5	1.5

Standard: H = 6 ± 1mm. Also available H = 4 ± 1mm

3-pin version ▪ Polarity protection

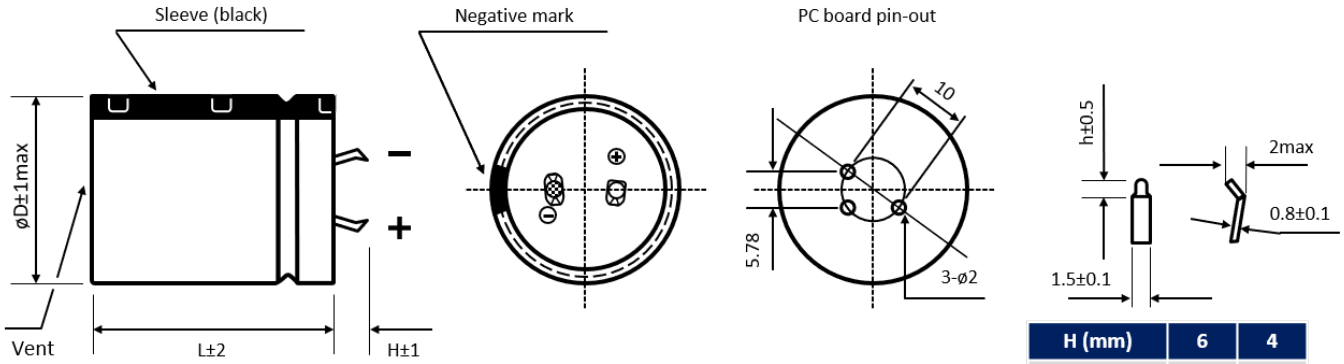

H (mm)	6	4
h (mm)	2.5	1.5

Standard: H = 4 ± 1mm. Also available H = 6 ± 1mm

For further information please contact sales@capxon.org

DIMENSIONS ▪ All dimensions in mm

Multipin version ▪ Diameter ø D ≥ 30 mm

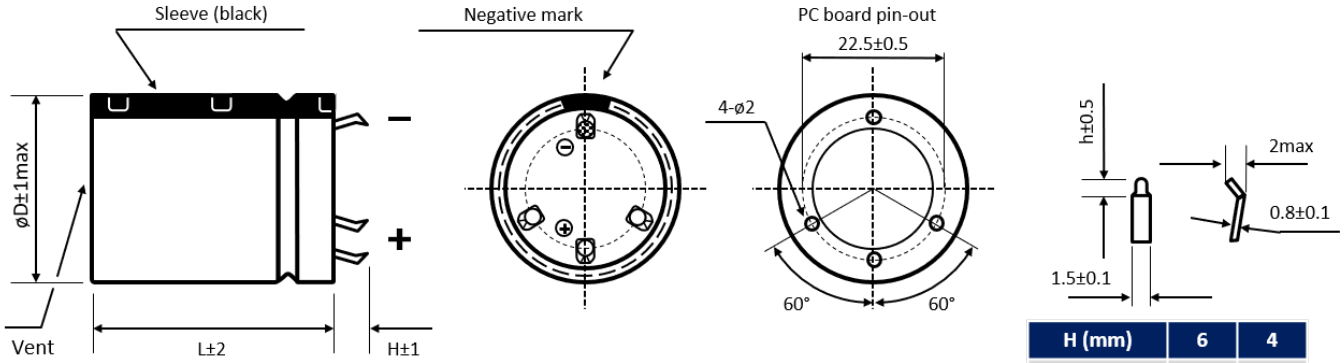

H (mm)	6	4
h (mm)	2.5	1.5

Standard: H = 6 ± 1mm. Also available H = 4 ± 1mm

Further possible terminal styles can be found in our packaging information liquid snap-in.

MULTIPLIER K_f for RIPPLE CURRENT vs. FREQUENCY

V_R (V) / Frequency (Hz)	50/60	100/120	300	1k	10k	50k - 100k
$10 \le V_R \le 100$	0.88	1	1.07	1.15	1.15	1.15
$160 \le V_R \le 250$	0.81	1	1.17	1.32	1.45	1.5
$315 \le V_R \le 500$	0.77	1	1.16	1.3	1.41	1.43

PRECAUTIONS, GUIDELINES AND PACKAGING INFORMATON

Unless otherwise agreed in individual specifications, all products are subject to our “General Precautions and Guidelines” as well as our “Packaging Information”. Please refer to the following pages in the table.

General Precautions and Guidelines	Packaging Information Liquid Snap-In
Page 837	Page 579

For further information please contact sales@capxon.org

USEFUL LIFE

$V_R \leq 100V$

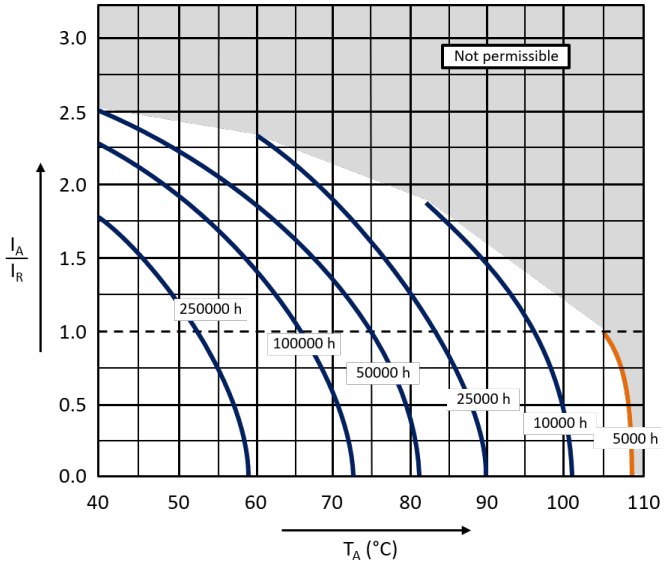

$V_R \geq 160V$

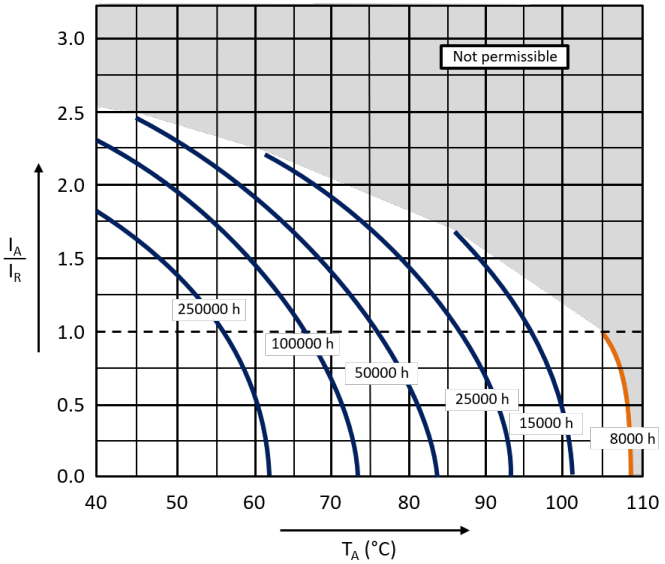

With: I_A: Application current
I_R: Rated ripple current (A RMS)
T_A: Application temperature of the capacitor

DISCLAIMER

All product related data (e.g. specification, statements and general information) are subject to change without any notice. It is necessary that the customer observes all product related technical / application information and handling instructions.

CapXon products are designed and manufactured according to severe quality and safety standards. Under no circumstance, CapXon warrants that any CapXon product is suitable for the purposes intended for your application, even CapXon knows the application. It is customer's duty and obligation to check and make sure that CapXon products are suitable for the purposes intended and select the correct and proper CapXon product. Customers are requested to perform a sufficient validation and reliability evaluation to assure needed safety level and reliability performance by suitable designs and to apply proper safeguards (e.g. redundancies, protective circuits).

Particular operating conditions (ambient temperature, ripple current, voltage, thermal resistance, etc.) as well as storage, production or assembly may affect the performance and the lifetime of the capacitor. Please consult CapXon for lifetime estimation, failure mode considerations or worst-case scenarios according to the product technology, product tolerances / deviations or change of the characteristics of the capacitor due to shipment, storage, handling, production and usage.

For aerospace or military application, life-saving, life-sustaining, safety critical applications or any application where failure may cause severe personal injury or death, please consult us before design-in the capacitor in your application.

Except for the written expressed warranties, CapXon does not impliedly, by assumption or whatever else, warrant, undertake, promise any other warranty or guaranty for any CapXon product.

For further information, please visit our website www.capxongroup.com or contact CapXon directly.

UK SERIES ▪ ULTRA LONG LIFE, AUTOMOTIVE 105°C TYPE



KEY FEATURES

AEC-Q 200 · LONG LIFE · HIGH VOLTAGE

- **ALUMINUM ELECTROLYTIC CAPACITOR** ▪ Snap-In type
- Useful life: 105°C ▪ 8 000 hours
- Extremely stable dissipation factor and leakage current
- Especially for applications with demanding operating environment
- AEC-Q200 version available

HF Halogen Free · RoHS & REACH COMPLIANT

SPECIFICATIONS

Items		Performance Characteristics			
Operating Temperature Range		-40 ~ +105°C		-25 ~ +105°C	
Rated Voltage Range	V_R	200 ~ 450V DC		500 ~ 550V DC	
Surge Voltage	V_S	($V_R \le 315V$) ▪ $V_S = 1.15 \cdot V_R$		($V_R > 315V$) ▪ $V_S = 1.10 \cdot V_R$	
Capacitance Range	C_R	68 ~ 2200µF		47 ~ 680µF	
Cap. Tolerance	ΔC	±20% (120Hz ▪ 20°C)			
Leakage Current (20°C ▪ V_R applied)	I_{LEAK}	≤ √3·C_R·V_R ▪ After 5 minutes [I_{LEAK} (µA) ; C_R (µF) ; V_R (V)]			
Dissipation Factor % (20°C ▪ 120Hz)	tanδ	V_R (V DC)	200 ~ 400	450 ~ 550	
		tanδ	15	20	
Self-Resistance (20°C ▪ 120Hz)	ESR	Not to exceed the values shown in standard ratings			
Low Temperature Characteristics at 120Hz	Z ratio max.	V_R (V DC)	200 ~ 250	315 ~ 450	500 ~ 550
		Z-25°C/Z+20°C	4	5	6
		Z-40°C/Z+20°C	7	10	-

Lifetime Test		
Useful Life 105°C (V_R & I_R applied)	Test	**8 000 hours**
	△C/C_R	≤ ±20% of initial measured value
	tanδ	≤ 200% of initial specified value
	I_{Leak}	≤ the initial specified value
	Deviation Rate @ Useful Life: 10 000 FIT = 1%/1000h with 60% confidence level ▪ parts show higher drift as test criteria	
Endurance 105°C (V_R & I_R applied)	Test	**3 000 hours**
	△C/C_R	≤ ±15% of initial measured value
	tanδ	≤ 175% of initial specified value
	I_{Leak}	≤ the initial specified value
Shelf Life 105°C (V_R = 0)	Test	**1 000 hours**
	△C/C_R	≤ ±15% of initial measured value
	tanδ	≤ 175% of initial specified value
	I_{Leak}	≤ the initial specified value
	Before measurement: Restore capacitor to 20°C, apply V_R for 30 min according JIS-C-5101-4	
Vibration Resistance Test	Max. 10g force, f_{RANGE} 10Hz … 55Hz, amplitude 0.75mm; X/Y/Z-axis each 2h; capacitor rigidly clamped by body to surface ▪ IEC 60068-2-6	

For further information please contact sales@capxon.org

STANDARD RATINGS

V_R (V)	C_R (µF)	ø D (mm)	L (mm)	Typ. ESR +20°C ▪ 120Hz (mΩ)	Max. ESR +20°C ▪ 120Hz (mΩ)	I_R ▪ Max. Ripple Current +105°C ▪ 120Hz (mA rms)	CapXon Part Number
200	330	22	25	320	600	1380	UK331M200M250A□□□
	390	22	25	280	510	1450	UK391M200M250A□□□
	470	22	30	230	420	1680	UK471M200M300A□□□
	470	25	25	230	420	1680	UK471M200N250A□□□
	560	22	35	190	360	1810	UK561M200M350A□□□
	560	25	30	190	360	1780	UK561M200N300A□□□
	560	30	25	190	360	1960	UK561M200O250A□□□
	680	22	40	160	290	2150	UK681M200M400A□□□
	680	25	35	160	290	2060	UK681M200N350A□□□
	680	30	25	160	290	2170	UK681M200O250A□□□
	820	22	45	130	240	2420	UK821M200M450A□□□
	820	25	35	130	240	2220	UK821M200N350A□□□
	820	30	25	130	240	2340	UK821M200O250A□□□
	1000	25	45	110	200	2720	UK102M200N450A□□□
	1000	30	30	110	200	2910	UK102M200O300A□□□
	1000	35	25	110	200	3140	UK102M200P250A□□□
	1200	25	50	92	170	2870	UK122M200N500A□□□
	1200	30	35	92	170	3420	UK122M200O350A□□□
	1200	35	30	92	170	3380	UK122M200P300A□□□
	1500	25	60	70	130	3290	UK152M200N600A□□□
	1500	30	45	70	130	4120	UK152M200O450A□□□
	1500	35	35	70	130	3910	UK152M200P350A□□□
	1800	30	50	59	110	4330	UK182M200O500A□□□
	1800	35	40	59	110	4460	UK182M200P400A□□□
	2200	30	60	49	90	4750	UK222M200O600A□□□
	2200	35	45	49	90	5110	UK222M200P450A□□□
250	220	22	25	490	900	1150	UK221M250M250A□□□
	270	22	25	400	740	1210	UK271M250M250A□□□
	330	22	30	320	600	1520	UK331M250M300A□□□
	330	25	25	320	600	1450	UK331M250N250A□□□
	390	22	35	280	510	1720	UK391M250M350A□□□
	390	22	40	280	510	1820	UK391M250M400A□□□
	390	25	30	280	510	1580	UK391M250N300A□□□
	390	30	25	280	510	1620	UK391M250O250A□□□
	470	22	40	230	420	1960	UK471M250M400A□□□
	470	25	30	230	420	1720	UK471M250N300A□□□
	470	30	25	230	420	1880	UK471M250O250A□□□
	560	22	45	190	360	2160	UK561M250M450A□□□
	560	25	35	190	360	1960	UK561M250N350A□□□
	560	30	30	190	360	2220	UK561M250O300A□□□
	560	35	25	190	360	2080	UK561M250P250A□□□
	680	22	50	160	290	2410	UK681M250M500A□□□
	680	25	40	160	290	2210	UK681M250N400A□□□
	680	30	30	160	290	2350	UK681M250O300A□□□

□□□ See description at end of standard ratings

For further information please contact sales@capxon.org

STANDARD RATINGS

V_R (V)	C_R (µF)	ø D (mm)	L (mm)	Typ. ESR +20°C ▪ 120Hz (mΩ)	Max. ESR +20°C ▪ 120Hz (mΩ)	I_R ▪ Max. Ripple Current +105°C ▪ 120Hz (mA rms)	CapXon Part Number
250	680	35	25	160	290	2500	UK681M250P250A□□□
	820	30	35	130	240	2780	UK821M250O350A□□□
	820	35	30	130	240	2900	UK821M250P300A□□□
	1000	30	40	110	200	3300	UK102M250O400A□□□
	1000	35	35	110	200	3360	UK102M250P350A□□□
	1200	30	50	92	170	3850	UK122M250O500A□□□
	1200	35	40	92	170	3820	UK122M250P400A□□□
	1500	30	55	70	130	4330	UK152M250O550A□□□
	1500	35	45	70	130	4340	UK152M250P450A□□□
	1800	35	50	59	110	4700	UK182M250P500A□□□
	2200	35	60	49	90	5580	UK222M250P600A□□□
315	150	22	25	720	1330	1000	UK151M315M250A□□□
	180	22	30	600	1110	1150	UK181M315M300A□□□
	220	22	30	490	900	1300	UK221M315M300A□□□
	220	25	25	490	900	1300	UK221M315N250A□□□
	270	22	35	400	740	1410	UK271M315M350A□□□
	270	25	30	400	740	1420	UK271M315N300A□□□
	330	22	40	320	600	1740	UK331M315M400A□□□
	330	25	35	320	600	1580	UK331M315N350A□□□
	330	30	25	320	600	1620	UK331M315O250A□□□
	390	22	50	280	510	1940	UK391M315M500A□□□
	390	25	35	280	510	1700	UK391M315N350A□□□
	390	30	30	280	510	1780	UK391M315O300A□□□
	390	35	25	280	510	1800	UK391M315P250A□□□
	470	22	55	230	420	2050	UK471M315M550A□□□
	470	25	45	230	420	2040	UK471M315N450A□□□
	470	30	35	230	420	2030	UK471M315O350A□□□
	470	35	30	230	420	2070	UK471M315P300A□□□
	560	25	50	190	360	2280	UK561M315N500A□□□
	560	30	35	190	360	2230	UK561M315O350A□□□
	560	35	30	190	360	2250	UK561M315P300A□□□
	680	25	55	160	290	2700	UK681M315N550A□□□
	680	30	40	160	290	2660	UK681M315O400A□□□
	680	35	35	160	290	2700	UK681M315P350A□□□
	820	30	50	130	240	3120	UK821M315O500A□□□
	820	35	40	130	240	3100	UK821M315P400A□□□
	1000	30	55	110	200	3640	UK102M315O550A□□□
	1000	35	45	110	200	3560	UK102M315P450A□□□
	1200	35	50	92	170	4050	UK122M315P500A□□□
	1500	35	60	70	130	4350	UK152M315P600A□□□
350	100	22	25	1080	1990	740	UK101M350M250A□□□
	100	25	20	1080	1990	520	UK101M350N200A□□□
	120	22	25	900	1660	920	UK121M350M250A□□□
	150	22	30	720	1330	1060	UK151M350M300A□□□

□□□ See description at end of standard ratings

For further information please contact sales@capxon.org

STANDARD RATINGS

V_R (V)	C_R (µF)	ø D (mm)	L (mm)	Typ. ESR +20°C ▪ 120Hz (mΩ)	Max. ESR +20°C ▪ 120Hz (mΩ)	I_R ▪ Max. Ripple Current +105°C ▪ 120Hz (mA rms)	CapXon Part Number
350	180	22	30	600	1110	1170	UK181M350M300A□□□
	180	25	25	600	1110	1170	UK181M350N250A□□□
	220	22	35	490	900	1320	UK221M350M350A□□□
	220	22	40	490	900	1400	UK221M350M400A□□□
	220	25	30	490	900	1330	UK221M350N300A□□□
	220	30	25	490	900	1350	UK221M350O250A□□□
	270	22	45	400	740	1550	UK271M350M450A□□□
	270	25	35	400	740	1470	UK271M350N350A□□□
	270	30	25	400	740	1370	UK271M350O250A□□□
	330	22	50	320	600	1760	UK331M350M500A□□□
	330	25	40	320	600	1680	UK331M350N400A□□□
	330	30	30	320	600	1640	UK331M350O300A□□□
	330	35	25	320	600	1690	UK331M350P250A□□□
	390	25	45	280	510	1860	UK391M350N450A□□□
	390	30	35	280	510	1840	UK391M350O350A□□□
	390	35	30	280	510	1870	UK391M350P300A□□□
	470	25	50	230	420	2090	UK471M350N500A□□□
	470	30	40	230	420	2090	UK471M350O400A□□□
	470	35	30	230	420	2080	UK471M350P300A□□□
	560	30	45	190	360	2240	UK561M350O450A□□□
	560	35	35	190	360	2260	UK561M350P350A□□□
	680	30	50	160	290	2670	UK681M350O500A□□□
	680	35	40	160	290	2710	UK681M350P400A□□□
	820	35	45	130	240	3110	UK821M350P450A□□□
	820	35	50	130	240	3250	UK821M350P500A□□□
	1000	35	55	110	200	3580	UK102M350P550A□□□
	1200	35	60	92	170	4100	UK122M350P600A□□□
400	82	22	25	1310	2430	610	UK820M400M250A□□□
	100	22	25	1080	1990	670	UK101M400M250A□□□
	120	22	30	900	1660	790	UK121M400M300A□□□
	120	25	25	900	1660	790	UK121M400N250A□□□
	120	25	30	900	1660	850	UK121M400N300A□□□
	150	22	35	720	1330	950	UK151M400M350A□□□
	150	22	40	720	1330	1000	UK151M400M400A□□□
	150	25	25	720	1330	890	UK151M400N250A□□□
	150	25	30	720	1330	960	UK151M400N300A□□□
	150	30	25	720	1330	990	UK151M400O250A□□□
	180	22	35	600	1110	1040	UK181M400M350A□□□
	180	22	40	600	1110	1100	UK181M400M400A□□□
	180	25	30	600	1110	1050	UK181M400N300A□□□
	180	25	35	600	1110	1120	UK181M400N350A□□□
	180	30	25	600	1110	1090	UK181M400O250A□□□
	180	30	30	600	1110	1170	UK181M400O300A□□□
	220	22	45	490	900	1200	UK221M400M450A□□□
	220	25	35	490	900	1200	UK221M400N350A□□□

□□□ See description at end of standard ratings

For further information please contact sales@capxon.org

STANDARD RATINGS

V_R (V)	C_R (µF)	ø D (mm)	L (mm)	Typ. ESR +20°C ▪ 120Hz (mΩ)	Max. ESR +20°C ▪ 120Hz (mΩ)	I_R ▪ Max. Ripple Current +105°C ▪ 120Hz (mA rms)	CapXon Part Number
400	220	25	45	490	900	1240	UK221M400N450A□□□
	220	30	25	490	900	1150	UK221M400O250A□□□
	220	30	30	490	900	1240	UK221M400O300A□□□
	220	35	25	490	900	1240	UK221M400P250A□□□
	270	22	50	400	740	1320	UK271M400M500A□□□
	270	25	40	400	740	1290	UK271M400N400A□□□
	270	25	50	400	740	1420	UK271M400N500A□□□
	270	30	30	400	740	1270	UK271M400O300A□□□
	270	30	35	400	740	1350	UK271M400O350A□□□
	270	35	25	400	740	1300	UK271M400P250A□□□
	270	35	30	400	740	1390	UK271M400P300A□□□
	330	25	45	320	600	1500	UK331M400N450A□□□
	330	25	50	320	600	1570	UK331M400N500A□□□
	330	30	35	320	600	1500	UK331M400O350A□□□
	330	30	40	320	600	1580	UK331M400O400A□□□
	330	35	30	320	600	1540	UK331M400P300A□□□
	330	35	35	320	600	1640	UK331M400P350A□□□
	390	25	50	280	510	1700	UK391M400N500A□□□
	390	30	40	280	510	1720	UK391M400O400A□□□
	390	30	45	280	510	1800	UK391M400O450A□□□
	390	35	30	280	510	1700	UK391M400P300A□□□
	390	35	35	280	510	1780	UK391M400P350A□□□
	470	30	45	230	420	1980	UK471M400O450A□□□
	470	30	50	230	420	2070	UK471M400O500A□□□
	470	35	35	230	420	1980	UK471M400P350A□□□
	470	35	40	230	420	2070	UK471M400P400A□□□
	470	35	45	230	420	2160	UK471M400P450A□□□
	560	30	50	190	360	2260	UK561M400O500A□□□
	560	35	40	190	360	2260	UK561M400P400A□□□
	560	35	45	190	360	2360	UK561M400P450A□□□
	680	30	50	160	290	2490	UK681M400O500A□□□
	680	35	45	160	290	2600	UK681M400P450A□□□
	680	35	50	160	290	2720	UK681M400P500A□□□
	820	35	55	130	240	3110	UK821M400P550A□□□
	820	35	60	130	240	3230	UK821M400P600A□□□
	1000	35	55	110	200	3440	UK102M400P550A□□□
	1000	35	60	110	200	3570	UK102M400P600A□□□
	1200	35	60	92	170	3910	UK122M400P600A□□□
450	68	22	25	2110	3900	550	UK680M450M250A□□□
	82	22	25	1750	3230	610	UK820M450M250A□□□
	100	22	30	1430	2650	720	UK101M450M300A□□□
	100	25	25	1430	2650	720	UK101M450N250A□□□
	120	22	35	1190	2210	850	UK121M450M350A□□□
	120	22	40	1190	2210	900	UK121M450M400A□□□
	120	25	30	1190	2210	850	UK121M450N300A□□□

□□□ See description at end of standard ratings

For further information please contact sales@capxon.org

STANDARD RATINGS

V_R (V)	C_R (µF)	ø D (mm)	L (mm)	Typ. ESR +20°C ▪ 120Hz (mΩ)	Max. ESR +20°C ▪ 120Hz (mΩ)	I_R ▪ Max. Ripple Current +105°C ▪ 120Hz (mA rms)	CapXon Part Number
450	120	25	35	1190	2210	910	UK121M450N350A□□□
	120	30	25	1190	2210	850	UK121M450O250A□□□
	150	22	40	960	1770	1000	UK151M450M400A□□□
	150	25	30	960	1770	960	UK151M450N300A□□□
	150	25	35	960	1770	1020	UK151M450N350A□□□
	150	30	25	960	1770	1000	UK151M450O250A□□□
	150	30	30	960	1770	1060	UK151M450O300A□□□
	150	35	25	960	1770	1090	UK151M450P250A□□□
	180	22	45	790	1470	1160	UK181M450M450A□□□
	180	22	50	790	1470	1210	UK181M450M500A□□□
	180	25	35	790	1470	1120	UK181M450N350A□□□
	180	25	40	790	1470	1210	UK181M450N400A□□□
	180	30	30	790	1470	1210	UK181M450O300A□□□
	180	30	35	790	1470	1240	UK181M450O350A□□□
	180	35	25	790	1470	1210	UK181M450P250A□□□
	180	35	30	790	1470	1280	UK181M450P300A□□□
	220	25	40	650	1210	1240	UK221M450N400A□□□
	220	25	45	650	1210	1280	UK221M450N450A□□□
	220	30	30	650	1210	1240	UK221M450O300A□□□
	220	30	35	650	1210	1280	UK221M450O350A□□□
	220	35	25	650	1210	1240	UK221M450P250A□□□
	220	35	30	650	1210	1280	UK221M450P300A□□□
	270	25	50	530	980	1420	UK271M450N500A□□□
	270	30	30	530	980	1280	UK271M450O300A□□□
	270	30	35	530	980	1350	UK271M450O350A□□□
	270	35	30	530	980	1390	UK271M450P300A□□□
	270	35	35	530	980	1480	UK271M450P350A□□□
	330	30	40	430	800	1580	UK331M450O400A□□□
	330	30	45	430	800	1660	UK331M450O450A□□□
	330	35	30	430	800	1580	UK331M450P300A□□□
	330	35	35	430	800	1660	UK331M450P350A□□□
	390	30	45	370	680	1800	UK391M450O450A□□□
	390	30	50	370	680	1890	UK391M450O500A□□□
	390	35	40	370	680	1890	UK391M450P400A□□□
	390	35	45	370	680	1970	UK391M450P450A□□□
	470	30	50	300	560	2080	UK471M450O500A□□□
	470	35	35	300	560	1970	UK471M450P350A□□□
	470	35	40	300	560	2080	UK471M450P400A□□□
	470	35	45	300	560	2160	UK471M450P450A□□□
	560	35	50	250	470	2470	UK561M450P500A□□□
	560	35	55	250	470	2570	UK561M450P550A□□□
	680	35	50	210	390	2720	UK681M450P500A□□□
	680	35	60	210	390	2940	UK681M450P600A□□□
	820	35	60	170	320	3230	UK821M450P600A□□□
	820	35	65	170	320	3350	UK821M450P650A□□□

□□□ See description at end of standard ratings

For further information please contact sales@capxon.org

STANDARD RATINGS

V_R (V)	C_R (µF)	ø D (mm)	L (mm)	Typ. ESR +20°C ▪ 120Hz (mΩ)	Max. ESR +20°C ▪ 120Hz (mΩ)	I_R ▪ Max. Ripple Current +105°C ▪ 120Hz (mA rms)	CapXon Part Number
500	47	22	25	3050	5640	450	UK470M500M250A□□□
	56	22	30	2560	4740	520	UK560M500M300A□□□
	68	22	30	2110	3900	520	UK680M500M300A□□□
	68	22	35	2110	3900	560	UK680M500M350A□□□
	68	25	25	2110	3900	540	UK680M500N250A□□□
	68	25	30	2110	3900	580	UK680M500N300A□□□
	82	22	35	1750	3230	700	UK820M500M350A□□□
	82	25	30	1750	3230	710	UK820M500N300A□□□
	100	22	40	1430	2650	810	UK101M500M400A□□□
	100	25	35	1430	2650	860	UK101M500N350A□□□
	100	30	30	1430	2650	850	UK101M500O300A□□□
	120	22	50	1190	2210	980	UK121M500M500A□□□
	120	25	40	1190	2210	950	UK121M500N400A□□□
	120	30	35	1190	2210	1000	UK121M500O350A□□□
	120	35	30	1190	2210	1030	UK121M500P300A□□□
	150	22	50	960	1770	1100	UK151M500M500A□□□
	150	25	45	960	1770	1130	UK151M500N450A□□□
	150	30	40	960	1770	1190	UK151M500O400A□□□
	150	35	35	960	1770	1230	UK151M500P350A□□□
	180	25	50	790	1470	1240	UK181M500N500A□□□
	180	30	45	790	1470	1310	UK181M500O450A□□□
	220	25	55	650	1210	1450	UK221M500N550A□□□
	220	30	45	650	1210	1470	UK221M500O450A□□□
	220	35	40	650	1210	1530	UK221M500P400A□□□
	220	35	35	650	1210	1450	UK221M500P350A□□□
	270	30	50	530	980	1550	UK271M500O500A□□□
	270	35	40	530	980	1620	UK271M500P400A□□□
	330	30	55	430	800	1890	UK331M500O550A□□□
	390	35	45	370	680	1850	UK391M500P450A□□□
	390	35	55	370	680	2020	UK391M500P550A□□□
	470	35	60	300	560	2280	UK471M500P600A□□□
	560	35	65	250	470	2320	UK561M500P650A□□□
	680	40	60	210	390	2450	UK681M500Q600A□□□
550	220	35	35	650	1210	1300	UK221M550P350A□□□
	270	35	45	530	980	1600	UK271M550P450A□□□
	330	35	50	430	800	1630	UK331M550P500A□□□
	390	35	55	370	680	1800	UK391M550P550A□□□
	470	35	65	300	560	2100	UK471M550P650A□□□

□□□: Enter **P6** for standard type ▪ 6mm pin length
□□□: Enter **P6X** for standard type ▪ 6mm pin length ▪ AEC-Q200

□□□: Enter **Z6** for 3-pin type ▪ 6mm pin length
□□□: Enter **Z6X** for 3-pin type ▪ 6mm pin length ▪ AEC-Q200

□□□: Enter **Y6** for multi-pin type ▪ 6mm pin length
□□□: Enter **Y6X** for multi-pin type ▪ 6mm pin length ▪ AEC-Q200

□□□: Enter **P4** for standard type ▪ 4mm pin length
□□□: Enter **P4X** for standard type ▪ 4mm pin length ▪ AEC-Q200

□□□: Enter **Z4** for 3-pin type ▪ 4mm pin length
□□□: Enter **Z4X** for 3-pin type ▪ 4mm pin length ▪ AEC-Q200

□□□: Enter **Y4** for multi-pin type ▪ 4mm pin length
□□□: Enter **Y4X** for multi-pin type ▪ 4mm pin length ▪ AEC-Q200

For further information please contact sales@capxon.org

DIMENSIONS ▪ All dimensions in mm

2-pin version ▪ Standard type

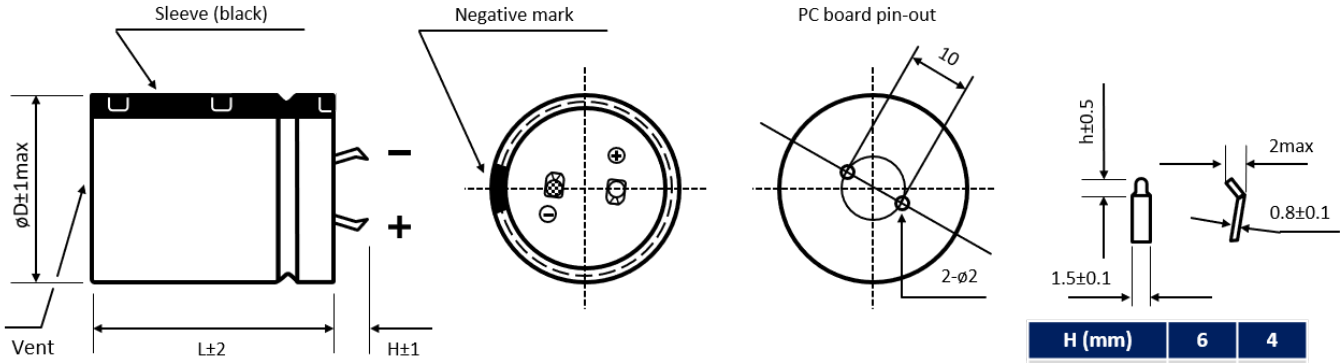

H (mm)	6	4
h (mm)	2.5	1.5

Standard: H = 6 ± 1mm. Also available H = 4 ± 1mm

3-pin version ▪ Polarity protection

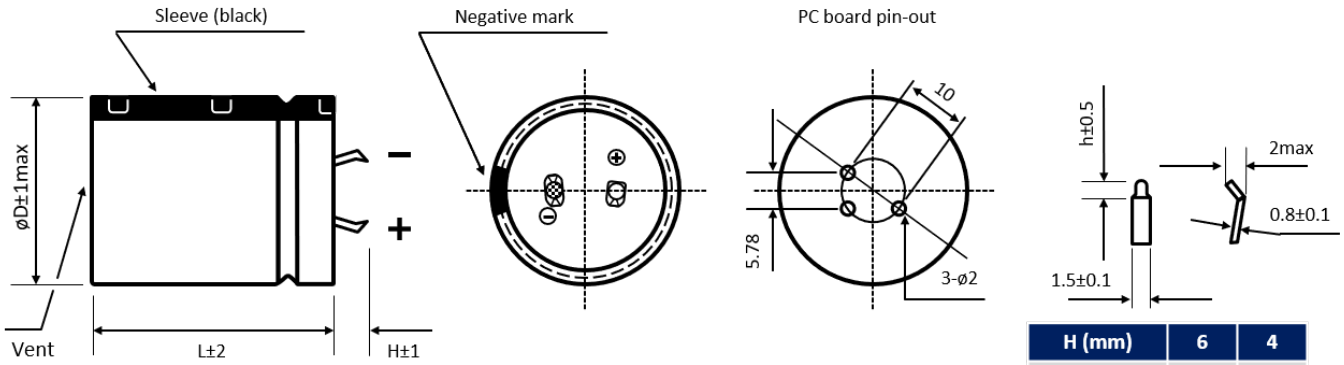

H (mm)	6	4
h (mm)	2.5	1.5

Standard: H = 4 ± 1mm. Also available H = 6 ± 1mm

Multipin version ▪ Diameter ø D ≥ 30 mm

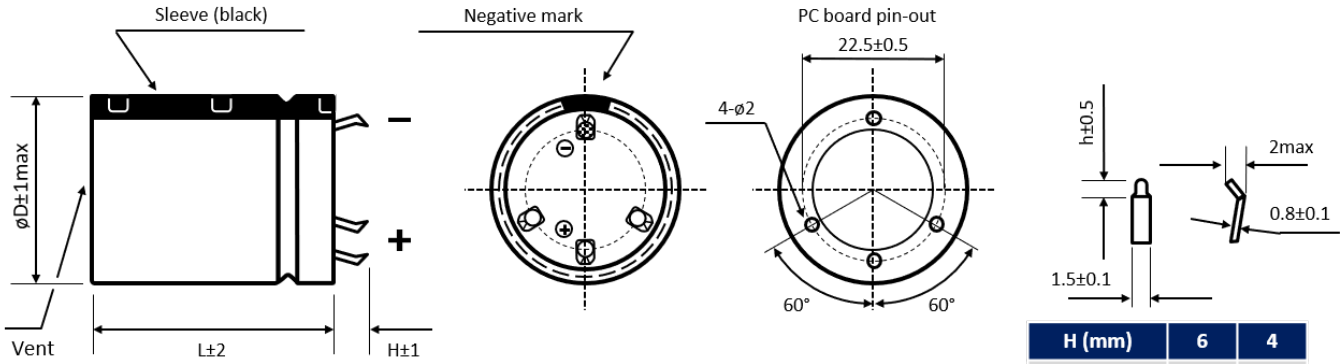

H (mm)	6	4
h (mm)	2.5	1.5

Standard: H = 6 ± 1mm. Also available H = 4 ± 1mm

Further possible terminal styles can be found in our packaging information liquid snap-in.

For further information please contact sales@capxon.org

MULTIPLIER K_f for RIPPLE CURRENT vs. FREQUENCY

V_R (V) / Frequency (Hz)	50/60	100/120	300	1k	10k	50k - 100k
$200 \le V_R \le 250$	0.81	1	1.17	1.32	1.45	1.5
$315 \le V_R \le 550$	0.77	1	1.16	1.3	1.41	1.43

PRECAUTIONS, GUIDELINES AND PACKAGING INFORMATON

Unless otherwise agreed in individual specifications, all products are subject to our “General Precautions and Guidelines” as well as our “Packaging Information”. Please refer to the following pages in the table.

General Precautions and Guidelines	Packaging Information Liquid Snap-In
Page 837	Page 579

USEFUL LIFE

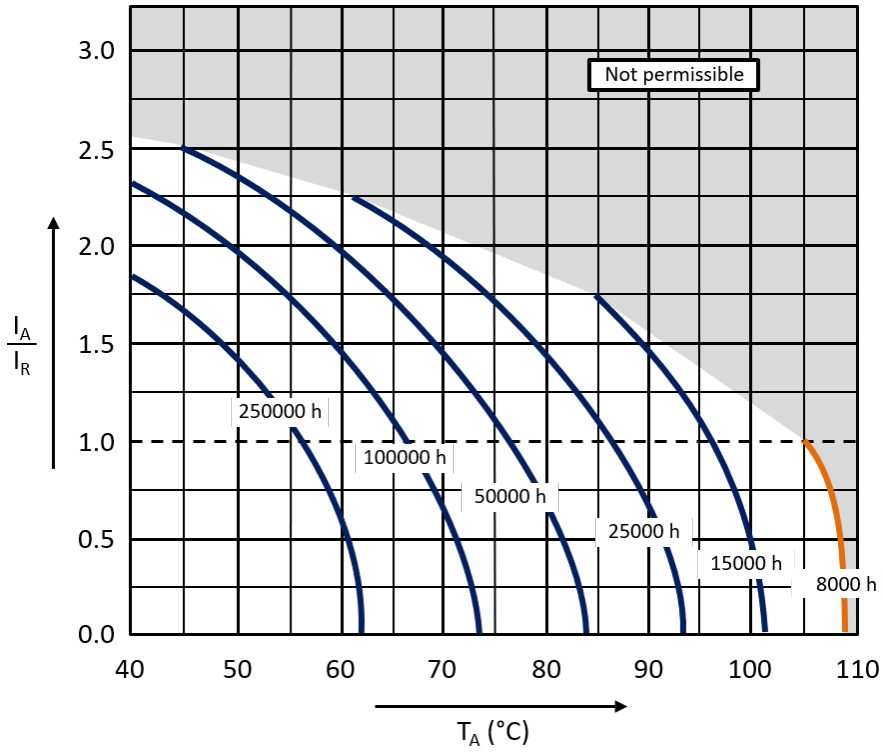

With: I_A: Application current
I_R: Rated ripple current (A RMS)
T_A: Application temperature of the capacitor

For further information please contact sales@capxon.org

DISCLAIMER

All product related data (e.g. specification, statements and general information) are subject to change without any notice. It is necessary that the customer observes all product related technical / application information and handling instructions.

CapXon products are designed and manufactured according to severe quality and safety standards. Under no circumstance, CapXon warrants that any CapXon product is suitable for the purposes intended for your application, even CapXon knows the application. It is customer's duty and obligation to check and make sure that CapXon products are suitable for the purposes intended and select the correct and proper CapXon product. Customers are requested to perform a sufficient validation and reliability evaluation to assure needed safety level and reliability performance by suitable designs and to apply proper safeguards (e.g. redundancies, protective circuits).

Particular operating conditions (ambient temperature, ripple current, voltage, thermal resistance, etc.) as well as storage, production or assembly may affect the performance and the lifetime of the capacitor. Please consult CapXon for lifetime estimation, failure mode considerations or worst-case scenarios according to the product technology, product tolerances / deviations or change of the characteristics of the capacitor due to shipment, storage, handling, production and usage.

For aerospace or military application, life-saving, life-sustaining, safety critical applications or any application where failure may cause severe personal injury or death, please consult us before design-in the capacitor in your application.

Except for the written expressed warranties, CapXon does not impliedly, by assumption or whatever else, warrant, undertake, promise any other warranty or guaranty for any CapXon product.

For further information, please visit our website www.capxongroup.com or contact CapXon directly.

HL SERIES ▪ ULTRA LONG LIFE 105°C TYPE



KEY FEATURES

HIGH VOLTAGE LONG LIFE

- **ALUMINUM ELECTROLYTIC CAPACITOR** ▪ Snap-In type
- Useful life: 105°C ▪ 7 000 hours up to 10 000 hours
- Wide capacitance range
- Small dimensions
- Stable operating under steady state environment

HF Halogen Free RoHS & REACH COMPLIANT

SPECIFICATIONS

Items		Performance Characteristics									
Operating Temperature Range		-40 ~ +105°C					-25 ~ +105°C				
Rated Voltage Range	V_R	10 ~ 350V DC					385 ~ 500V DC				
Surge Voltage	V_S	($V_R \le 315V$): $V_S = 1.15 \cdot V_R$					($V_R > 315V$): $V_S = 1.10 \cdot V_R$				
Capacitance Range	C_R	56 ~ 56000µF					39 ~ 1200µF				
Cap. Tolerance	ΔC	±20% (120Hz ▪ 20°C)									
Leakage Current (20°C ▪ V_R applied)	I_{LEAK}	≤ √3·C_R·V_R ▪ After 5 minutes [I_{LEAK} (µA) ; C_R (µF) ; V_R (V)]									
Dissipation Factor % (20°C ▪ 120Hz)	tanδ	µF / V DC	10	16	25	35	50	63	80	100	160 ~ 420	450 ~ 500
		≤ 8200	35	35	30	25	20	20	15	15	15	20
		10000 ~ 22000	40	40	35	30	30	25	20	-	-	-
		≥ 27000	50	40	35	35	30	25	-	-	-	-
Low Temperature Characteristics at 120Hz	Z ratio max.	V_R (V DC)	10 ~ 16		25	35	50 ~ 100		160 ~ 250		315 ~ 350	400 ~ 500
		Z-25°C/Z+20°C	4		3	3	3		4		8	8
		Z-40°C/Z+20°C	15		10	8	6		8		12	-

Lifetime Test		$V_R \le 100V$	$V_R > 100V$
Useful Life 105°C (V_R & I_R applied)	Test	**7 000 hours**	**10 000 hours**
	△C/C_R	≤ ±30% of initial measured value	≤ ±20% of initial measured value
	tanδ	≤ 300% of initial specified value	≤ 200% of initial specified value
	I_{Leak}	≤ the initial specified value	≤ the initial specified value
	Deviation Rate @ Useful Life: 10 000 FIT = 1%/1000h with 60% confidence level ▪ parts show higher drift as test criteria		
Endurance 105°C (V_R & I_R applied)	Test	**5 000 hours**	
	△C/C_R	≤ ±20% of initial measured value	≤ ±15% of initial measured value
	Tanδ	≤ 200% of initial specified value	≤ 175% of initial specified value
	I_{Leak}	≤ the initial specified value	≤ the initial specified value
Shelf Life 105°C (V_R = 0)	Test	**1 000 hours**	
	△C/C_R	≤ ±20% of initial measured value	≤ ±15% of initial measured value
	tanδ	≤ 200% of initial specified value	≤ 175% of initial specified value
	I_{Leak}	≤ the initial specified value	≤ the initial specified value
	Before measurement: Restore capacitor to 20°C, apply V_R for 30 min according JIS-C-5101-4		
Vibration Resistance Test	Max. 10g force, f_{RANGE} 10Hz … 55Hz, amplitude 0.75mm; X/Y/Z-axis each 2h; capacitor rigidly clamped by body to surface ▪ IEC 60068-2-6		

For further information please contact sales@capxon.org

STANDARD RATINGS

V_R (V)	C_R (µF)	ø D (mm)	L (mm)	Typ. ESR +20°C ▪ 120Hz (mΩ)	Max. ESR +20°C ▪ 120Hz (mΩ)	I_R ▪ Max. Ripple Current +105°C ▪ 120Hz (mA rms)	CapXon Part Number
10	5600	22	25	64	83	1100	HL562M010M250A □□
	6800	22	25	53	68	1300	HL682M010M250A □□
	6800	25	25	53	68	1340	HL682M010N250A □□
	8200	22	25	44	57	1360	HL822M010M250A □□
	8200	25	25	44	57	1560	HL822M010N250A □□
	10000	25	25	36	46	1600	HL103M010N250A □□
	12000	25	25	34	44	1820	HL123M010N250A □□
	12000	30	25	34	44	1890	HL123M010O250A □□
	15000	22	40	27	35	2100	HL153M010M400A □□
	15000	25	30	27	35	2110	HL153M010N300A □□
	15000	30	25	27	35	2140	HL153M010O250A □□
	18000	25	30	23	29	2200	HL183M010N300A □□
	18000	30	30	23	29	2370	HL183M010O300A □□
	22000	22	40	19	24	2750	HL223M010M400A □□
	22000	25	35	19	24	2780	HL223M010N350A □□
	22000	30	30	19	24	2800	HL223M010O300A □□
	27000	25	45	19	25	3010	HL273M010N450A □□
	27000	30	35	19	25	3130	HL273M010O350A □□
	27000	35	30	19	25	3160	HL273M010P300A □□
	33000	25	50	15	20	3430	HL333M010N500A □□
	33000	30	40	15	20	3530	HL333M010O400A □□
	33000	35	35	15	20	3560	HL333M010P350A □□
	39000	30	45	13	17	3780	HL393M010O450A □□
	39000	35	40	13	17	3960	HL393M010P400A □□
	47000	30	50	11	14	4610	HL473M010O500A □□
	47000	35	45	11	14	4630	HL473M010P450A □□
	56000	35	50	9	12	5060	HL563M010P500A □□
16	5600	22	25	64	83	1450	HL562M016M250A □□
	6800	22	30	53	68	1660	HL682M016M300A □□
	6800	25	25	53	68	1670	HL682M016N250A □□
	8200	22	30	44	57	1790	HL822M016M300A □□
	8200	25	25	44	57	1800	HL822M016N250A □□
	10000	22	35	36	46	2080	HL103M016M350A □□
	10000	25	30	36	46	2090	HL103M016N300A □□
	10000	30	25	36	46	2110	HL103M016O250A □□
	12000	22	40	34	44	2360	HL123M016M400A □□
	12000	25	35	34	44	2370	HL123M016N350A □□
	12000	30	25	34	44	2400	HL123M016O250A □□
	12000	35	25	34	44	2420	HL123M016P250A □□
	15000	22	45	27	35	2690	HL153M016M450A □□
	15000	25	35	27	35	2700	HL153M016N350A □□
	15000	25	40	27	35	2720	HL153M016N400A □□
	15000	30	30	27	35	2740	HL153M016O300A □□
	18000	25	45	23	29	3060	HL183M016N450A □□

□□ See description at end of standard ratings

For further information please contact sales@capxon.org

STANDARD RATINGS

V_R (V)	C_R (µF)	ø D (mm)	L (mm)	Typ. ESR +20°C ▪ 120Hz (mΩ)	Max. ESR +20°C ▪ 120Hz (mΩ)	I_R ▪ Max. Ripple Current +105°C ▪ 120Hz (mA rms)	CapXon Part Number
16	18000	30	35	23	29	3080	HL183M016O350A ☐☐
	18000	35	30	23	29	3090	HL183M016P300A ☐☐
	22000	25	50	19	24	3390	HL223M016N500A ☐☐
	22000	30	35	19	24	3400	HL223M016O350A ☐☐
	22000	30	40	19	24	3460	HL223M016O400A ☐☐
	22000	35	30	19	24	3480	HL223M016P300A ☐☐
	27000	25	50	15	20	3600	HL273M016N500A ☐☐
	27000	30	40	15	20	3620	HL273M016O400A ☐☐
	27000	35	30	15	20	3650	HL273M016P300A ☐☐
	27000	35	35	15	20	3850	HL273M016P350A ☐☐
	33000	30	45	12	16	4000	HL333M016O450A ☐☐
	33000	35	40	12	16	4330	HL333M016P400A ☐☐
	39000	30	50	10	14	4320	HL393M016O500A ☐☐
	39000	35	40	10	14	4320	HL393M016P400A ☐☐
	39000	35	45	10	14	4960	HL393M016P450A ☐☐
	47000	35	45	9	11	5100	HL473M016P450A ☐☐
	47000	35	50	9	11	5490	HL473M016P500A ☐☐
25	3900	22	25	77	100	1310	HL392M025M250A ☐☐
	4700	22	30	65	85	1550	HL472M025M300A ☐☐
	4700	25	25	65	85	1570	HL472M025N250A ☐☐
	5600	22	30	55	71	1800	HL562M025M300A ☐☐
	5600	25	25	55	71	1810	HL562M025N250A ☐☐
	5800	22	35	53	69	1770	HL582M025M350A ☐☐
	5800	25	25	53	69	1760	HL582M025N250A ☐☐
	6800	22	30	45	59	1900	HL682M025M300A ☐☐
	6800	22	40	45	59	1920	HL682M025M400A ☐☐
	6800	25	25	45	59	1930	HL682M025N250A ☐☐
	6800	25	30	45	59	1950	HL682M025N300A ☐☐
	8200	22	35	37	49	2100	HL822M025M350A ☐☐
	8200	25	30	37	49	2120	HL822M025N300A ☐☐
	8200	30	25	37	49	2140	HL822M025O250A ☐☐
	10000	22	40	31	40	2300	HL103M025M400A ☐☐
	10000	25	35	31	40	2310	HL103M025N350A ☐☐
	10000	30	30	31	40	2330	HL103M025O300A ☐☐
	10000	35	30	31	40	2350	HL103M025P300A ☐☐
	12000	25	40	30	39	2600	HL123M025N400A ☐☐
	12000	30	35	30	39	2700	HL123M025O350A ☐☐
	12000	35	30	30	39	2760	HL123M025P300A ☐☐
	15000	25	45	24	31	2900	HL153M025N450A ☐☐
	15000	30	40	24	31	3130	HL153M025O400A ☐☐
	15000	35	35	24	31	3160	HL153M025P350A ☐☐
	18000	25	50	20	26	3170	HL183M025N500A ☐☐
	18000	30	45	20	26	3520	HL183M025O450A ☐☐
	18000	35	35	20	26	3560	HL183M025P350A ☐☐

☐☐ See description at end of standard ratings

For further information please contact sales@capxon.org

STANDARD RATINGS

V_R (V)	C_R (µF)	ø D (mm)	L (mm)	Typ. ESR +20°C ▪ 120Hz (mΩ)	Max. ESR +20°C ▪ 120Hz (mΩ)	I_R ▪ Max. Ripple Current +105°C ▪ 120Hz (mA rms)	CapXon Part Number
25	18000	35	40	20	26	3600	HL183M025P400A □□
	22000	30	45	16	21	3620	HL223M025O450A □□
	22000	30	50	16	21	3920	HL223M025O500A □□
	22000	35	40	16	21	3940	HL223M025P400A □□
	22000	35	45	16	21	3950	HL223M025P450A □□
	27000	35	45	13	17	4100	HL273M025P450A □□
	27000	35	50	13	17	4700	HL273M025P500A □□
	33000	35	50	11	14	4800	HL333M025P500A □□
35	2200	22	25	120	150	1100	HL222M035M250A □□
	2700	22	25	92	120	1290	HL272M035M250A □□
	3300	22	30	77	100	1420	HL332M035M300A □□
	3300	25	25	77	100	1430	HL332M035N250A □□
	3900	22	30	65	85	1600	HL392M035M300A □□
	3900	25	25	65	85	1610	HL392M035N250A □□
	3900	25	30	65	85	1650	HL392M035N300A □□
	4700	22	35	54	71	1800	HL472M035M350A □□
	4700	22	40	54	71	1810	HL472M035M400A □□
	4700	25	30	54	71	1820	HL472M035N300A □□
	5600	22	45	46	59	2250	HL562M035M450A □□
	5600	25	30	46	59	2000	HL562M035N300A □□
	5600	25	35	46	59	2180	HL562M035N350A □□
	5600	30	30	46	59	2230	HL562M035O300A □□
	6800	25	35	38	49	2200	HL682M035N350A □□
	6800	25	40	38	49	2450	HL682M035N400A □□
	6800	30	30	38	49	2460	HL682M035O300A □□
	8200	25	40	31	40	2510	HL822M035N400A □□
	8200	25	45	31	40	2610	HL822M035N450A □□
	8200	30	35	31	40	2690	HL822M035O350A □□
	8200	35	30	31	40	2710	HL822M035P300A □□
	10000	30	40	26	33	3040	HL103M035O400A □□
	10000	35	35	26	33	3100	HL103M035P350A □□
	12000	30	40	26	33	3050	HL123M035O400A □□
	12000	30	45	26	33	3380	HL123M035O450A □□
	12000	35	40	26	33	3410	HL123M035P400A □□
	15000	30	45	20	27	3470	HL153M035O450A □□
	15000	35	40	20	27	3980	HL153M035P400A □□
	15000	35	45	20	27	4100	HL153M035P450A □□
	18000	35	45	17	22	4400	HL183M035P450A □□
	18000	35	50	17	22	4460	HL183M035P500A □□
50	1500	22	25	140	180	1210	HL152M050M250A □□
	1800	22	25	120	150	1300	HL182M050M250A □□
	1800	22	30	120	150	1340	HL182M050M300A □□
	1800	25	25	120	150	1350	HL182M050N250A □□
	2200	22	30	92	120	1520	HL222M050M300A □□

□□ See description at end of standard ratings

For further information please contact sales@capxon.org

STANDARD RATINGS

V_R (V)	C_R (µF)	ø D (mm)	L (mm)	Typ. ESR +20°C ▪ 120Hz (mΩ)	Max. ESR +20°C ▪ 120Hz (mΩ)	I_R ▪ Max. Ripple Current +105°C ▪ 120Hz (mA rms)	CapXon Part Number
50	2200	25	25	92	120	1540	HL222M050N250A □□
	2700	22	35	76	98	1770	HL272M050M350A □□
	2700	25	30	76	98	1780	HL272M050N300A □□
	3300	22	35	62	80	1800	HL332M050M350A □□
	3300	25	30	62	80	1870	HL332M050N300A □□
	3300	30	25	62	80	1890	HL332M050O250A □□
	3900	22	40	52	68	1910	HL392M050M400A □□
	3900	25	30	52	68	1920	HL392M050N300A □□
	3900	25	35	52	68	2200	HL392M050N350A □□
	4700	22	45	43	56	2250	HL472M050M450A □□
	4700	25	35	43	56	2250	HL472M050N350A □□
	4700	25	40	43	56	2430	HL472M050N400A □□
	4700	30	30	43	56	2440	HL472M050O300A □□
	4700	35	30	43	56	2460	HL472M050P300A □□
	5600	22	50	36	47	2430	HL562M050M500A □□
	5600	25	40	36	47	2430	HL562M050N400A □□
	5600	30	35	36	47	2600	HL562M050O350A □□
	5600	35	30	36	47	2610	HL562M050P300A □□
	6800	25	45	30	39	2620	HL682M050N450A □□
	6800	30	35	30	39	2620	HL682M050O350A □□
	6800	30	40	30	39	3010	HL682M050O400A □□
	6800	35	40	30	39	3020	HL682M050P400A □□
	8200	30	45	25	32	3420	HL822M050O450A □□
	8200	30	50	25	32	3630	HL822M050O500A □□
	8200	35	40	25	32	3640	HL822M050P400A □□
	10000	30	50	20	27	3640	HL103M050O500A □□
	10000	35	45	20	27	3650	HL103M050P450A □□
	10000	35	50	20	27	3680	HL103M050P500A □□
	12000	35	45	26	33	3700	HL123M050P450A □□
	15000	35	50	20	27	3990	HL153M050P500A □□
63	1000	22	25	210	270	1100	HL102M063M250A □□
	1200	22	25	170	220	1300	HL122M063M250A □□
	1500	22	30	140	180	1310	HL152M063M300A □□
	1500	25	25	140	180	1380	HL152M063N250A □□
	1800	22	30	120	150	1600	HL182M063M300A □□
	1800	25	25	120	150	1620	HL182M063N250A □□
	1800	25	30	120	150	1630	HL182M063N300A □□
	1800	30	25	120	150	1650	HL182M063O250A □□
	2200	22	35	92	120	1800	HL222M063M350A □□
	2200	25	30	92	120	1810	HL222M063N300A □□
	2200	30	25	92	120	1820	HL222M063O250A □□
	2700	22	40	76	98	2000	HL272M063M400A □□
	2700	25	35	76	98	2010	HL272M063N350A □□
	2700	30	25	76	98	2030	HL272M063O250A □□

□□ See description at end of standard ratings

For further information please contact sales@capxon.org

STANDARD RATINGS

V_R (V)	C_R (µF)	ø D (mm)	L (mm)	Typ. ESR +20°C ▪ 120Hz (mΩ)	Max. ESR +20°C ▪ 120Hz (mΩ)	I_R ▪ Max. Ripple Current +105°C ▪ 120Hz (mA rms)	CapXon Part Number
63	3300	22	45	62	80	2200	HL332M063M450A □□
	3300	25	35	62	80	2230	HL332M063N350A □□
	3300	30	30	62	80	2250	HL332M063O300A □□
	3900	25	40	52	68	2400	HL392M063N400A □□
	3900	30	35	52	68	2410	HL392M063O350A □□
	3900	35	30	52	68	2460	HL392M063P300A □□
	4700	25	50	43	56	2600	HL472M063N500A □□
	4700	30	40	43	56	2820	HL472M063O400A □□
	4700	35	30	43	56	2750	HL472M063P300A □□
	5600	30	45	36	47	3120	HL562M063O450A □□
	5600	35	35	36	47	3150	HL562M063P350A □□
	5600	35	40	36	47	3200	HL562M063P400A □□
	6800	30	50	30	39	3210	HL682M063O500A □□
	6800	35	40	30	39	3210	HL682M063P400A □□
	8200	35	45	25	32	3400	HL822M063P450A □□
	10000	30	50	20	27	3600	HL103M063O500A □□
	10000	35	50	20	27	3800	HL103M063P500A □□
80	820	22	25	180	240	1090	HL821M080M250A □□
	1000	22	30	150	200	1290	HL102M080M300A □□
	1000	25	25	150	200	1310	HL102M080N250A □□
	1200	22	35	130	170	1480	HL122M080M350A □□
	1200	25	25	130	170	1500	HL122M080N250A □□
	1200	30	25	130	170	1510	HL122M080O250A □□
	1500	22	35	100	130	1600	HL152M080M350A □□
	1500	25	25	100	130	1790	HL152M080N250A □□
	1500	25	30	100	130	1800	HL152M080N300A □□
	1500	30	25	100	130	1810	HL152M080O250A □□
	1800	22	45	85	110	1910	HL182M080M450A □□
	1800	25	35	85	110	1910	HL182M080N350A □□
	2200	22	45	70	90	2000	HL222M080M450A □□
	2200	25	35	70	90	2030	HL222M080N350A □□
	2200	30	30	70	90	2050	HL222M080O300A □□
	2200	35	30	70	90	2090	HL222M080P300A □□
	2700	25	40	57	74	2200	HL272M080N400A □□
	2700	30	30	57	74	2230	HL272M080O300A □□
	2700	35	30	57	74	2440	HL272M080P300A □□
	3300	25	45	46	60	2450	HL332M080N450A □□
	3300	30	35	46	60	2450	HL332M080O350A □□
	3300	35	30	46	60	2450	HL332M080P300A □□
	3900	30	40	39	51	2600	HL392M080O400A □□
	3900	35	30	39	51	2620	HL392M080P300A □□
	3900	35	40	39	51	3000	HL392M080P400A □□
	4700	30	45	33	42	3120	HL472M080O450A □□
	4700	35	40	33	42	3150	HL472M080P400A □□

□□ See description at end of standard ratings

For further information please contact sales@capxon.org

STANDARD RATINGS

V_R (V)	C_R (µF)	ø D (mm)	L (mm)	Typ. ESR +20°C ▪ 120Hz (mΩ)	Max. ESR +20°C ▪ 120Hz (mΩ)	I_R ▪ Max. Ripple Current +105°C ▪ 120Hz (mA rms)	CapXon Part Number
80	5600	35	40	27	36	3290	HL562M080P400A □□
	6800	35	45	23	29	3500	HL682M080P450A □□
100	390	22	25	390	510	780	HL391M100M250A □□
	560	22	25	280	360	1100	HL561M100M250A □□
	560	22	30	280	360	1110	HL561M100M300A □□
	560	25	25	280	360	1120	HL561M100N250A □□
	680	22	30	220	290	1200	HL681M100M300A □□
	680	25	30	220	290	1210	HL681M100N300A □□
	820	22	35	180	240	1330	HL821M100M350A □□
	820	25	30	180	240	1400	HL821M100N300A □□
	1000	22	35	150	200	1500	HL102M100M350A □□
	1000	22	40	150	200	1560	HL102M100M400A □□
	1000	25	30	150	200	1560	HL102M100N300A □□
	1000	30	25	150	200	1570	HL102M100O250A □□
	1000	35	25	150	200	1580	HL102M100P250A □□
	1200	22	40	130	170	1600	HL122M100M400A □□
	1200	25	35	130	170	1620	HL122M100N350A □□
	1200	30	25	130	170	1640	HL122M100O250A □□
	1200	30	30	130	170	1760	HL122M100O300A □□
	1200	35	30	130	170	1780	HL122M100P300A □□
	1500	22	45	100	130	1800	HL152M100M450A □□
	1500	25	40	100	130	1820	HL152M100N400A □□
	1500	30	30	100	130	1830	HL152M100O300A □□
	1500	35	30	100	130	1850	HL152M100P300A □□
	1800	25	45	85	110	2000	HL182M100N450A □□
	1800	30	35	85	110	2010	HL182M100O350A □□
	1800	35	30	85	110	2090	HL182M100P300A □□
	1800	35	35	85	110	2100	HL182M100P350A □□
	2200	25	50	70	90	2200	HL222M100N500A □□
	2200	30	40	70	90	2230	HL222M100O400A □□
	2200	35	35	70	90	2480	HL222M100P350A □□
	2200	35	40	70	90	2500	HL222M100P400A □□
	2700	30	45	57	74	2650	HL272M100O450A □□
	2700	35	35	57	74	2690	HL272M100P350A □□
	2700	35	40	57	74	2870	HL272M100P400A □□
	3300	30	50	46	60	2990	HL332M100O500A □□
	3300	35	40	46	60	3090	HL332M100P400A □□
	3300	35	45	46	60	3250	HL332M100P450A □□
	3900	35	50	39	51	3560	HL392M100P500A □□
	4700	35	50	33	42	3600	HL472M100P500A □□
160	270	22	25	380	740	1090	HL271M160M250A □□
	330	22	25	310	600	1200	HL331M160M250A □□
	390	22	25	260	510	1330	HL391M160M250A □□
	470	22	25	220	420	1480	HL471M160M250A □□

□□ See description at end of standard ratings

For further information please contact sales@capxon.org

STANDARD RATINGS

V_R (V)	C_R (µF)	ø D (mm)	L (mm)	Typ. ESR +20°C ▪ 120Hz (mΩ)	Max. ESR +20°C ▪ 120Hz (mΩ)	I_R ▪ Max. Ripple Current +105°C ▪ 120Hz (mA rms)	CapXon Part Number
160	560	22	30	180	360	1680	HL561M160M300A □□
	560	25	25	180	360	1690	HL561M160N250A □□
	680	22	30	150	290	1960	HL681M160M300A □□
	680	25	25	150	290	1970	HL681M160N250A □□
	680	30	25	150	290	1980	HL681M160O250A □□
	820	22	35	120	240	2110	HL821M160M350A □□
	820	25	30	120	240	2120	HL821M160N300A □□
	820	30	40	120	240	2130	HL821M160O400A □□
	820	35	30	120	240	2140	HL821M160P300A □□
	1000	22	40	100	200	2400	HL102M160M400A □□
	1000	25	35	100	200	2430	HL102M160N350A □□
	1000	30	25	100	200	2550	HL102M160O250A □□
	1000	35	25	100	200	2590	HL102M160P250A □□
	1200	22	50	87	170	2810	HL122M160M500A □□
	1200	25	40	87	170	2850	HL122M160N400A □□
	1200	30	30	87	170	2910	HL122M160O300A □□
	1200	35	25	87	170	2950	HL122M160P250A □□
	1500	25	45	67	130	3170	HL152M160N450A □□
	1500	30	35	67	130	3230	HL152M160O350A □□
	1500	35	35	67	130	3310	HL152M160P350A □□
	1800	25	50	56	110	3520	HL182M160N500A □□
	1800	30	40	56	110	3630	HL182M160O400A □□
	1800	35	30	56	110	3660	HL182M160P300A □□
	2200	30	45	46	90	4140	HL222M160O450A □□
	2200	35	35	46	90	4150	HL222M160P350A □□
	2700	35	40	38	74	4780	HL272M160P400A □□
	3300	35	50	31	60	5420	HL332M160P500A □□
180	220	22	25	460	900	630	HL221M180M250A □□
	270	22	30	380	740	1100	HL271M180M300A □□
	270	25	25	380	740	1110	HL271M180N250A □□
	330	22	35	310	600	1210	HL331M180M350A □□
	330	25	30	310	600	1220	HL331M180N300A □□
	390	22	40	260	510	1340	HL391M180M400A □□
	390	25	35	260	510	1350	HL391M180N350A □□
	390	30	25	260	510	1360	HL391M180O250A □□
	470	22	45	220	420	1490	HL471M180M450A □□
	470	30	30	220	420	1500	HL471M180O300A □□
	560	22	50	180	360	1700	HL561M180M500A □□
	560	25	40	180	360	1710	HL561M180N400A □□
	560	30	35	180	360	1720	HL561M180O350A □□
	680	25	45	150	290	2010	HL681M180N450A □□
	680	35	30	150	290	2020	HL681M180P300A □□
	820	25	50	120	240	2150	HL821M180N500A □□
	820	30	40	120	240	2160	HL821M180O400A □□

□□ See description at end of standard ratings

For further information please contact sales@capxon.org

STANDARD RATINGS

V_R (V)	C_R (µF)	ø D (mm)	L (mm)	Typ. ESR +20°C ▪ 120Hz (mΩ)	Max. ESR +20°C ▪ 120Hz (mΩ)	I_R ▪ Max. Ripple Current +105°C ▪ 120Hz (mA rms)	CapXon Part Number
180	820	35	35	120	240	2170	HL821M180P350A □□
	1000	30	45	100	200	2180	HL102M180O450A □□
	1000	35	40	100	200	2200	HL102M180P400A □□
	1200	30	50	87	170	2250	HL122M180O500A □□
	1200	35	45	87	170	2280	HL122M180P450A □□
	1500	35	50	67	130	3320	HL152M180P500A □□
200	180	22	20	570	1110	990	HL181M200M200A □□
	220	22	25	460	900	1010	HL221M200M250A □□
	270	22	25	380	740	1120	HL271M200M250A □□
	330	22	25	310	600	1250	HL331M200M250A □□
	390	22	25	260	510	1530	HL391M200M250A □□
	390	25	25	260	510	1540	HL391M200N250A □□
	470	22	30	220	420	1630	HL471M200M300A □□
	470	25	25	220	420	1640	HL471M200N250A □□
	560	22	35	180	360	1820	HL561M200M350A □□
	560	25	25	180	360	1840	HL561M200N250A □□
	560	30	25	180	360	1850	HL561M200O250A □□
	680	22	40	150	290	2090	HL681M200M400A □□
	680	25	30	150	290	2100	HL681M200N300A □□
	680	30	25	150	290	2110	HL681M200O250A □□
	680	35	25	150	290	2110	HL681M200P250A □□
	820	22	45	120	240	2220	HL821M200M450A □□
	820	25	35	120	240	2230	HL821M200N350A □□
	820	30	35	120	240	2310	HL821M200O350A □□
	1000	22	50	100	200	2610	HL102M200M500A □□
	1000	25	40	100	200	2620	HL102M200N400A □□
	1000	30	30	100	200	2660	HL102M200O300A □□
	1000	35	25	100	200	2680	HL102M200P250A □□
	1200	25	45	87	170	2880	HL122M200N450A □□
	1200	30	35	87	170	2920	HL122M200O350A □□
	1200	35	30	87	170	2990	HL122M200P300A □□
	1500	30	40	67	130	3360	HL152M200O400A □□
	1500	35	35	67	130	3380	HL152M200P350A □□
	1800	30	50	56	110	3820	HL182M200O500A □□
	1800	35	40	56	110	3860	HL182M200P400A □□
	2200	35	45	46	90	4350	HL222M200P450A □□
	2700	35	50	38	74	4890	HL272M200P500A □□
220	270	22	25	380	740	1130	HL271M220M250A □□
	330	22	30	310	600	1290	HL331M220M300A □□
	390	22	30	260	510	1640	HL391M220M300A □□
	390	25	25	260	510	1650	HL391M220N250A □□
	470	22	35	220	420	1680	HL471M220M350A □□
	470	25	30	220	420	1690	HL471M220N300A □□
	560	22	40	180	360	1880	HL561M220M400A □□

□□ See description at end of standard ratings

For further information please contact sales@capxon.org

STANDARD RATINGS

V_R (V)	C_R (µF)	ø D (mm)	L (mm)	Typ. ESR +20°C ▪ 120Hz (mΩ)	Max. ESR +20°C ▪ 120Hz (mΩ)	I_R ▪ Max. Ripple Current +105°C ▪ 120Hz (mA rms)	CapXon Part Number
220	560	25	35	180	360	1900	HL561M220N350A □□
	560	30	30	180	360	1910	HL561M220O300A □□
	680	22	45	150	290	1950	HL681M220M450A □□
	680	25	35	150	290	2180	HL681M220N350A □□
	680	30	35	150	290	2190	HL681M220O350A □□
	680	35	25	150	290	2200	HL681M220P250A □□
	820	25	40	120	240	2350	HL821M220N400A □□
	820	25	45	120	240	2480	HL821M220N450A □□
	820	30	40	120	240	2500	HL821M220O400A □□
	820	35	30	120	240	2510	HL821M220P300A □□
	1000	25	50	100	200	2700	HL102M220N500A □□
	1000	30	45	100	200	2710	HL102M220O450A □□
	1000	35	35	100	200	2750	HL102M220P350A □□
	1200	30	50	87	170	2890	HL122M220O500A □□
	1200	35	40	87	170	2990	HL122M220P400A □□
	1500	35	45	67	130	3420	HL152M220P450A □□
	1800	35	50	56	110	3830	HL182M220P500A □□
	2200	35	60	46	90	3900	HL222M220P600A □□
250	180	22	30	570	1110	1010	HL181M250M300A □□
	180	25	25	570	1110	1030	HL181M250N250A □□
	220	22	25	460	900	1300	HL221M250M250A □□
	220	25	25	460	900	1320	HL221M250N250A □□
	330	22	30	310	600	1320	HL331M250M300A □□
	330	25	25	310	600	1330	HL331M250N250A □□
	390	22	35	260	510	1550	HL391M250M350A □□
	390	25	30	260	510	1560	HL391M250N300A □□
	390	30	25	260	510	1570	HL391M250O250A □□
	470	22	40	220	420	1690	HL471M250M400A □□
	470	25	30	220	420	1710	HL471M250N300A □□
	560	22	45	180	360	1920	HL561M250M450A □□
	560	25	35	180	360	1920	HL561M250N350A □□
	560	30	25	180	360	1930	HL561M250O250A □□
	560	30	30	180	360	2000	HL561M250O300A □□
	560	35	25	180	360	2200	HL561M250P250A □□
	680	22	50	150	290	2230	HL681M250M500A □□
	680	25	40	150	290	2250	HL681M250N400A □□
	680	30	30	150	290	2270	HL681M250O300A □□
	680	30	35	150	290	2300	HL681M250O350A □□
	680	35	25	150	290	2310	HL681M250P250A □□
	820	25	45	120	240	2320	HL821M250N450A □□
	820	25	50	120	240	2400	HL821M250N500A □□
	820	30	35	120	240	2410	HL821M250O350A □□
	820	35	30	120	240	2460	HL821M250P300A □□
	1000	30	40	100	200	2660	HL102M250O400A □□

□□ See description at end of standard ratings

For further information please contact sales@capxon.org

STANDARD RATINGS

V_R (V)	C_R (µF)	ø D (mm)	L (mm)	Typ. ESR +20°C ▪ 120Hz (mΩ)	Max. ESR +20°C ▪ 120Hz (mΩ)	I_R ▪ Max. Ripple Current +105°C ▪ 120Hz (mA rms)	CapXon Part Number
250	1000	35	35	100	200	2800	HL102M250P350A □□
	1000	35	40	100	200	3000	HL102M250P400A □□
	1200	30	45	87	170	3000	HL122M250O450A □□
	1200	35	40	87	170	3110	HL122M250P400A □□
	1500	35	45	67	130	3560	HL152M250P450A □□
	1800	35	50	56	110	3980	HL182M250P500A □□
315	68	22	25	1500	2930	320	HL680M315M250A □□
	82	22	30	1250	2430	380	HL820M315M300A □□
	100	25	25	1020	1990	410	HL101M315N250A □□
	150	22	25	680	1330	850	HL151M315M250A □□
	180	22	30	570	1110	1010	HL181M315M300A □□
	180	25	25	570	1110	1040	HL181M315N250A □□
	220	22	35	460	900	1100	HL221M315M350A □□
	220	25	25	460	900	1200	HL221M315N250A □□
	220	30	25	460	900	1250	HL221M315O250A □□
	270	22	40	380	740	1250	HL271M315M400A □□
	270	25	30	380	740	1260	HL271M315N300A □□
	270	30	30	380	740	1270	HL271M315O300A □□
	330	22	45	310	600	1320	HL331M315M450A □□
	330	25	35	310	600	1320	HL331M315N350A □□
	330	30	25	310	600	1320	HL331M315O250A □□
	330	30	30	310	600	1340	HL331M315O300A □□
	330	35	25	310	600	1380	HL331M315P250A □□
	390	22	50	260	510	1590	HL391M315M500A □□
	390	25	40	260	510	1610	HL391M315N400A □□
	390	30	40	260	510	1620	HL391M315O400A □□
	390	35	30	260	510	1630	HL391M315P300A □□
	470	22	60	220	420	1710	HL471M315M600A □□
	470	25	45	220	420	1750	HL471M315N450A □□
	470	30	35	220	420	1780	HL471M315O350A □□
	470	35	30	220	420	1790	HL471M315P300A □□
	560	25	50	180	360	2220	HL561M315N500A □□
	560	30	40	180	360	2250	HL561M315O400A □□
	560	35	30	180	360	2320	HL561M315P300A □□
	560	35	35	180	360	2350	HL561M315P350A □□
	680	25	60	150	290	2530	HL681M315N600A □□
	680	30	45	150	290	2530	HL681M315O450A □□
	680	35	35	150	290	2550	HL681M315P350A □□
	680	35	40	150	290	2560	HL681M315P400A □□
	820	30	50	120	240	2790	HL821M315O500A □□
	820	35	40	120	240	2880	HL821M315P400A □□
	820	35	45	120	240	3000	HL821M315P450A □□
	1000	30	60	100	200	3200	HL102M315O600A □□
	1000	35	50	100	200	3300	HL102M315P500A □□
	1200	35	55	87	170	3310	HL122M315P550A □□

□□ See description at end of standard ratings

For further information please contact sales@capxon.org

STANDARD RATINGS

V_R (V)	C_R (µF)	ø D (mm)	L (mm)	Typ. ESR +20°C ▪ 120Hz (mΩ)	Max. ESR +20°C ▪ 120Hz (mΩ)	I_R ▪ Max. Ripple Current +105°C ▪ 120Hz (mA rms)	CapXon Part Number
350	56	22	20	1820	3550	3330	HL560M350M200A □□
	68	22	25	1500	2930	340	HL680M350M250A □□
	82	22	30	1250	2430	400	HL820M350M300A □□
	100	25	25	1020	1990	470	HL101M350N250A □□
	120	22	25	850	1660	720	HL121M350M250A □□
	150	22	30	680	1330	870	HL151M350M300A □□
	150	25	25	680	1330	890	HL151M350N250A □□
	180	22	40	570	1110	1060	HL181M350M400A □□
	180	25	25	570	1110	1070	HL181M350N250A □□
	180	25	30	570	1110	1080	HL181M350N300A □□
	220	22	40	460	900	1350	HL221M350M400A □□
	220	25	30	460	900	1360	HL221M350N300A □□
	220	30	25	460	900	1380	HL221M350O250A □□
	270	22	45	380	740	1390	HL271M350M450A □□
	270	25	35	380	740	1400	HL271M350N350A □□
	270	30	30	380	740	1410	HL271M350O300A □□
	270	35	25	380	740	1420	HL271M350P250A □□
	330	22	50	310	600	1430	HL331M350M500A □□
	330	25	40	310	600	1440	HL331M350N400A □□
	330	30	35	310	600	1440	HL331M350O350A □□
	330	35	30	310	600	1450	HL331M350P300A □□
	390	25	45	260	510	1600	HL391M350N450A □□
	390	30	40	260	510	1630	HL391M350O400A □□
	390	35	30	260	510	1640	HL391M350P300A □□
	470	25	50	220	420	1770	HL471M350N500A □□
	470	30	45	220	420	1810	HL471M350O450A □□
	470	35	35	220	420	1820	HL471M350P350A □□
	560	30	50	180	360	2360	HL561M350O500A □□
	560	35	40	180	360	2370	HL561M350P400A □□
	680	35	45	150	290	2600	HL681M350P450A □□
	820	35	50	120	240	2870	HL821M350P500A □□
385	100	22	25	1020	1990	680	HL101M385M250A □□
	120	22	25	850	1660	760	HL121M385M250A □□
	120	22	30	850	1660	860	HL121M385M300A □□
	150	22	30	680	1330	880	HL151M385M300A □□
	150	25	25	680	1330	890	HL151M385N250A □□
	180	22	30	570	1110	1060	HL181M385M300A □□
	180	22	40	570	1110	1070	HL181M385M400A □□
	180	25	25	570	1110	1090	HL181M385N250A □□
	180	25	30	570	1110	1100	HL181M385N300A □□
	180	30	25	570	1110	1120	HL181M385O250A □□
	220	22	35	460	900	1340	HL221M385M350A □□
	220	22	45	460	900	1450	HL221M385M450A □□
	220	25	30	460	900	1390	HL221M385N300A □□

□□ See description at end of standard ratings

For further information please contact sales@capxon.org

STANDARD RATINGS

V_R (V)	C_R (µF)	ø D (mm)	L (mm)	Typ. ESR +20°C ▪ 120Hz (mΩ)	Max. ESR +20°C ▪ 120Hz (mΩ)	I_R ▪ Max. Ripple Current +105°C ▪ 120Hz (mA rms)	CapXon Part Number
385	220	25	35	460	900	1450	HL221M385N350A □□
	220	30	30	460	900	1400	HL221M385O300A □□
	220	35	25	460	900	1410	HL221M385P250A □□
	270	22	45	380	740	1450	HL271M385M450A □□
	270	22	50	380	740	1500	HL271M385M500A □□
	270	25	35	380	740	1450	HL271M385N350A □□
	270	25	40	380	740	1500	HL271M385N400A □□
	270	30	30	380	740	1500	HL271M385O300A □□
	270	35	30	380	740	1580	HL271M385P300A □□
	330	22	50	310	600	1550	HL331M385M500A □□
	330	22	55	310	600	1610	HL331M385M550A □□
	330	25	40	310	600	1560	HL331M385N400A □□
	330	25	45	310	600	1640	HL331M385N450A □□
	330	30	30	310	600	1610	HL331M385O300A □□
	330	30	35	310	600	1650	HL331M385O350A □□
	330	35	25	310	600	1660	HL331M385P250A □□
	330	35	30	310	600	1700	HL331M385P300A □□
	390	25	45	260	510	1700	HL391M385N450A □□
	390	25	50	260	510	1780	HL391M385N500A □□
	390	30	35	260	510	1700	HL391M385O350A □□
	390	30	40	260	510	1800	HL391M385O400A □□
	390	35	30	260	510	1720	HL391M385P300A □□
	390	35	35	260	510	1820	HL391M385P350A □□
	470	25	55	220	420	1900	HL471M385N550A □□
	470	30	40	220	420	1860	HL471M385O400A □□
	470	30	45	220	420	1900	HL471M385O450A □□
	470	35	35	220	420	1920	HL471M385P350A □□
	470	35	40	220	420	2100	HL471M385P400A □□
	560	25	60	180	360	2450	HL561M385N600A □□
	560	30	45	180	360	2390	HL561M385O450A □□
	560	30	50	180	360	2450	HL561M385O500A □□
	560	35	35	180	360	2430	HL561M385P350A □□
	560	35	45	180	360	2520	HL561M385P450A □□
	680	30	50	150	290	2640	HL681M385O500A □□
	680	30	55	150	290	2770	HL681M385O550A □□
	680	35	40	150	290	2720	HL681M385P400A □□
	680	35	50	150	290	2800	HL681M385P500A □□
	820	30	60	120	240	2850	HL821M385O600A □□
	820	35	50	120	240	2880	HL821M385P500A □□
	820	35	55	120	240	2980	HL821M385P550A □□
	1000	35	55	100	200	3180	HL102M385P550A □□
	1000	35	60	100	200	3280	HL102M385P600A □□

□□ See description at end of standard ratings

For further information please contact sales@capxon.org

STANDARD RATINGS

V_R (V)	C_R (µF)	ø D (mm)	L (mm)	Typ. ESR +20°C ▪ 120Hz (mΩ)	Max. ESR +20°C ▪ 120Hz (mΩ)	I_R ▪ Max. Ripple Current +105°C ▪ 120Hz (mA rms)	CapXon Part Number
400	56	22	25	1820	3550	380	HL560M400M250A □□
	68	22	25	1500	2930	510	HL680M400M250A □□
	68	25	20	1500	2930	520	HL680M400N200A □□
	82	22	25	1250	2430	560	HL820M400M250A □□
	82	25	25	1250	2430	610	HL820M400N250A □□
	100	22	25	1020	1990	620	HL101M400M250A □□
	100	22	30	1020	1990	670	HL101M400M300A □□
	100	25	25	1020	1990	680	HL101M400N250A □□
	120	22	30	850	1660	730	HL121M400M300A □□
	120	25	25	850	1660	740	HL121M400N250A □□
	120	30	25	850	1660	800	HL121M400O250A □□
	150	22	30	680	1330	800	HL151M400M300A □□
	150	25	30	680	1330	880	HL151M400N300A □□
	150	30	25	680	1330	920	HL151M400O250A □□
	180	22	35	570	1110	960	HL181M400M350A □□
	180	25	30	570	1110	970	HL181M400N300A □□
	180	30	25	570	1110	1000	HL181M400O250A □□
	220	25	30	460	900	1020	HL221M400N300A □□
	220	30	25	460	900	1020	HL221M400O250A □□
	220	30	30	460	900	1050	HL221M400O300A □□
	270	22	45	380	740	1160	HL271M400M450A □□
	270	22	50	380	740	1210	HL271M400M500A □□
	270	25	35	380	740	1160	HL271M400N350A □□
	270	30	30	380	740	1210	HL271M400O300A □□
	270	30	35	380	740	1240	HL271M400O350A □□
	270	35	25	380	740	1230	HL271M400P250A □□
	330	25	40	310	600	1310	HL331M400N400A □□
	330	30	30	310	600	1310	HL331M400O300A □□
	330	35	25	310	600	1310	HL331M400P250A □□
	470	30	45	220	420	1820	HL471M400O450A □□
	470	35	35	220	420	1820	HL471M400P350A □□
	470	35	40	220	420	1890	HL471M400P400A □□
	560	30	45	180	360	1990	HL561M400O450A □□
	560	30	50	180	360	2080	HL561M400O500A □□
	560	35	40	180	360	2080	HL561M400P400A □□
	560	35	45	180	360	2170	HL561M400P450A □□
	680	35	45	150	290	2390	HL681M400P450A □□
	680	35	50	150	290	2500	HL681M400P500A □□
	820	35	50	120	240	2500	HL821M400P500A □□
	820	35	55	120	240	2860	HL821M400P550A □□
	1200	35	60	87	170	3160	HL122M400P600A □□

□□ See description at end of standard ratings

For further information please contact sales@capxon.org

STANDARD RATINGS

V_R (V)	C_R (µF)	ø D (mm)	L (mm)	Typ. ESR +20°C ▪ 120Hz (mΩ)	Max. ESR +20°C ▪ 120Hz (mΩ)	I_R ▪ Max. Ripple Current +105°C ▪ 120Hz (mA rms)	CapXon Part Number
420	39	22	25	3490	6800	340	HL390M420M250A □□
	68	25	25	2000	3900	550	HL680M420N250A □□
	82	22	25	1660	3230	560	HL820M420M250A □□
	100	22	25	1360	2650	620	HL101M420M250A □□
	100	22	30	1360	2650	670	HL101M420M300A □□
	100	25	25	1360	2650	670	HL101M420N250A □□
	120	22	30	1130	2210	730	HL121M420M300A □□
	120	25	25	1130	2210	740	HL121M420N250A □□
	150	22	35	910	1770	880	HL151M420M350A □□
	150	25	30	910	1770	890	HL151M420N300A □□
	150	30	25	910	1770	920	HL151M420O250A □□
	180	22	35	750	1470	960	HL181M420M350A □□
	180	22	40	750	1470	1020	HL181M420M400A □□
	180	25	30	750	1470	1010	HL181M420N300A □□
	180	30	25	750	1470	1020	HL181M420O250A □□
	220	22	45	620	1210	1050	HL221M420M450A □□
	220	25	35	620	1210	1050	HL221M420N350A □□
	220	30	30	620	1210	1050	HL221M420O300A □□
	220	35	25	620	1210	1050	HL221M420P250A □□
	270	22	50	500	980	1210	HL271M420M500A □□
	270	25	40	500	980	1210	HL271M420N400A □□
	270	30	30	500	980	1210	HL271M420O300A □□
	270	30	35	500	980	1240	HL271M420O350A □□
	270	35	25	500	980	1210	HL271M420P250A □□
	270	35	30	500	980	1280	HL271M420P300A □□
	330	25	50	410	800	1440	HL331M420N500A □□
	330	30	35	410	800	1370	HL331M420O350A □□
	330	35	30	410	800	1440	HL331M420P300A □□
	470	30	45	290	560	1820	HL471M420O450A □□
	470	35	40	290	560	1890	HL471M420P400A □□
	560	30	55	240	470	2170	HL561M420O550A □□
	560	35	45	240	470	2170	HL561M420P450A □□
	680	30	60	200	390	2480	HL681M420O600A □□
	680	35	50	200	390	2500	HL681M420P500A □□
	820	35	55	160	320	2910	HL821M420P550A □□
	820	35	60	160	320	2970	HL821M420P600A □□
	1000	35	60	140	270	3280	HL102M420P600A □□
450	39	22	25	3490	6800	370	HL390M450M250A □□
	47	22	25	2890	5640	380	HL470M450M250A □□
	56	22	25	2430	4740	450	HL560M450M250A □□
	68	22	30	2000	3900	550	HL680M450M300A □□
	68	25	25	2000	3900	550	HL680M450N250A □□
	82	22	25	1660	3230	560	HL820M450M250A □□
	82	22	30	1660	3230	610	HL820M450M300A □□

□□ See description at end of standard ratings

For further information please contact sales@capxon.org

STANDARD RATINGS

V_R (V)	C_R (µF)	ø D (mm)	L (mm)	Typ. ESR +20°C ▪ 120Hz (mΩ)	Max. ESR +20°C ▪ 120Hz (mΩ)	I_R ▪ Max. Ripple Current +105°C ▪ 120Hz (mA rms)	CapXon Part Number
450	82	25	30	1660	3230	650	HL820M450N300A □□
	100	22	30	1360	2650	670	HL101M450M300A □□
	100	25	25	1360	2650	670	HL101M450N250A □□
	100	30	25	1360	2650	750	HL101M450O250A □□
	120	22	35	1130	2210	750	HL121M450M350A □□
	120	25	30	1130	2210	750	HL121M450N300A □□
	120	30	30	1130	2210	880	HL121M450O300A □□
	150	22	40	910	1770	930	HL151M450M400A □□
	150	25	25	910	1770	880	HL151M450N250A □□
	150	30	30	910	1770	990	HL151M450O300A □□
	150	35	30	910	1770	1080	HL151M450P300A □□
	180	22	45	750	1470	1100	HL181M450M450A □□
	180	25	35	750	1470	1100	HL181M450N350A □□
	180	30	30	750	1470	1100	HL181M450O300A □□
	180	35	25	750	1470	1110	HL181M450P250A □□
	220	25	35	620	1210	1130	HL221M450N350A □□
	220	30	30	620	1210	1130	HL221M450O300A □□
	220	30	35	620	1210	1150	HL221M450O350A □□
	220	35	30	620	1210	1160	HL221M450P300A □□
	270	25	45	500	980	1240	HL271M450N450A □□
	270	25	50	500	980	1300	HL271M450N500A □□
	270	30	40	500	980	1300	HL271M450O400A □□
	270	35	30	500	980	1300	HL271M450P300A □□
	330	25	50	410	800	1440	HL331M450N500A □□
	330	30	40	410	800	1450	HL331M450O400A □□
	330	35	35	410	800	1500	HL331M450P350A □□
	390	30	45	350	680	1660	HL391M450O450A □□
	390	35	35	350	680	1630	HL391M450P350A □□
	470	35	40	290	560	1890	HL471M450P400A □□
	560	35	50	240	470	2270	HL561M450P500A □□
	680	35	55	200	390	2610	HL681M450P550A □□
500	47	22	25	2890	5640	380	HL470M500M250A □□
	56	25	25	2430	4740	440	HL560M500N250A □□
	68	22	30	2000	3900	490	HL680M500M300A □□
	68	25	25	2000	3900	490	HL680M500N250A □□
	82	22	35	1660	3230	570	HL820M500M350A □□
	82	25	30	1660	3230	580	HL820M500N300A □□
	82	30	25	1660	3230	600	HL820M500O250A □□
	100	22	40	1360	2650	670	HL101M500M400A □□
	100	25	35	1360	2650	680	HL101M500N350A □□
	100	30	25	1360	2650	670	HL101M500O250A □□
	120	25	40	1130	2210	790	HL121M500N400A □□
	120	30	25	1130	2210	720	HL121M500O250A □□
	150	22	50	910	1770	910	HL151M500M500A □□

□□ See description at end of standard ratings

For further information please contact sales@capxon.org

STANDARD RATINGS

V_R (V)	C_R (µF)	ø D (mm)	L (mm)	Typ. ESR +20°C ▪ 120Hz (mΩ)	Max. ESR +20°C ▪ 120Hz (mΩ)	I_R ▪ Max. Ripple Current +105°C ▪ 120Hz (mA rms)	CapXon Part Number
500	150	25	45	910	1770	930	HL151M500N450A ☐☐☐
	150	30	30	910	1770	910	HL151M500O300A ☐☐☐
	180	25	50	750	1470	1060	HL181M500N500A ☐☐☐
	180	30	35	750	1470	1010	HL181M500O350A ☐☐☐
	180	35	30	750	1470	1050	HL181M500P300A ☐☐☐
	220	25	50	620	1210	1180	HL221M500N500A ☐☐☐
	220	30	45	620	1210	1250	HL221M500O450A ☐☐☐
	220	35	30	620	1210	1160	HL221M500P300A ☐☐☐
	270	30	50	500	980	1440	HL271M500O500A ☐☐☐
	270	35	35	500	980	1360	HL271M500P350A ☐☐☐
	330	35	40	410	800	1620	HL331M500P400A ☐☐☐
	390	35	50	350	680	1830	HL391M500P500A ☐☐☐
	470	35	55	290	560	2150	HL471M500P550A ☐☐☐

☐☐☐: Enter **P6** for standard type ▪ 6mm pin length
☐☐☐: Enter **Z6** for 3-pin type ▪ 6mm pin length
☐☐☐: Enter **Y6** for multipin-type ▪ 6mm pin length
☐☐☐: Enter **P4** for standard type ▪ 4mm pin length
☐☐☐: Enter **Z4** for 3-pin type ▪ 4mm pin length
☐☐☐: Enter **Y4** for multipin type ▪ 4mm pin length

DIMENSIONS ▪ All dimensions in mm

2-pin version ▪ Standard type

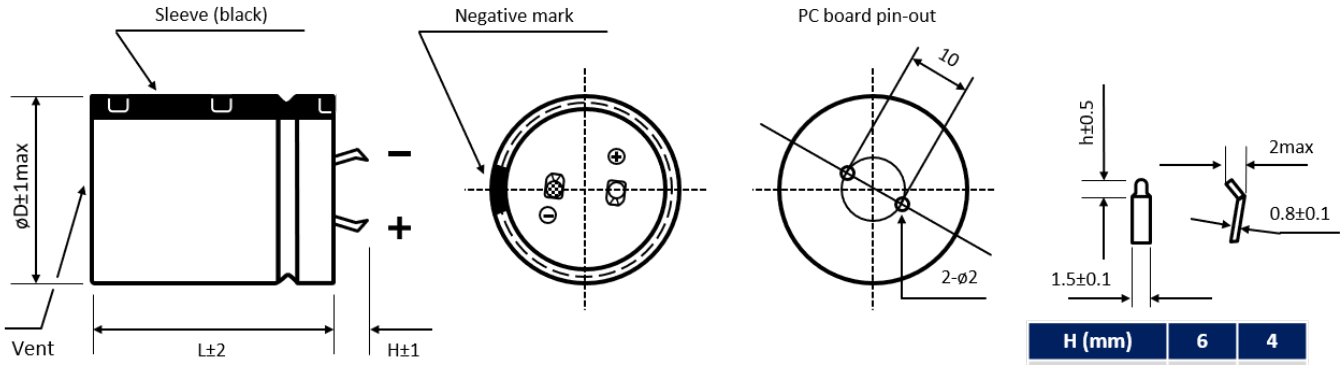

H (mm)	6	4
h (mm)	2.5	1.5

Standard: H = 6 ± 1mm. Also available H = 4 ± 1mm

3-pin version ▪ Polarity protection

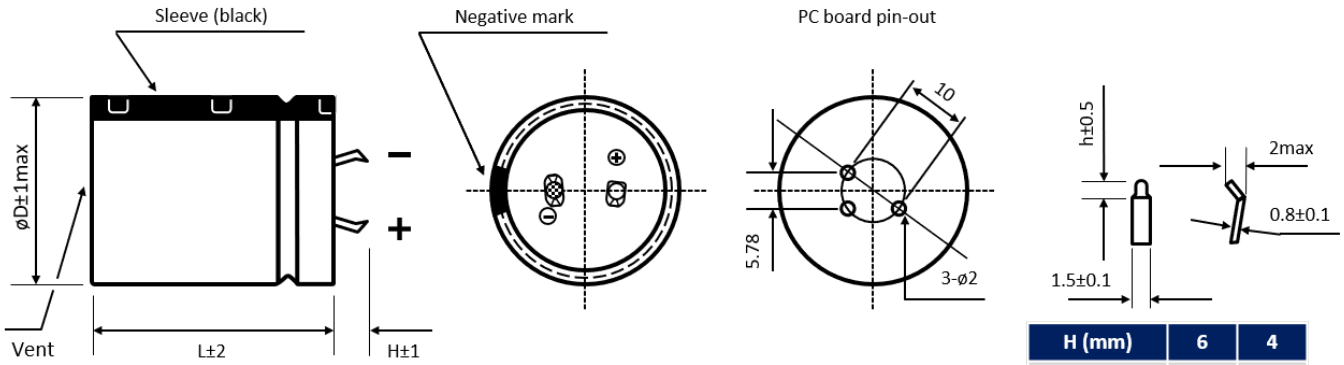

H (mm)	6	4
h (mm)	2.5	1.5

Standard: H = 4 ± 1mm. Also available H = 6 ± 1mm

For further information please contact sales@capxon.org

DIMENSIONS ▪ All dimensions in mm

Multipin version ▪ Diameter ø D ≥ 30 mm

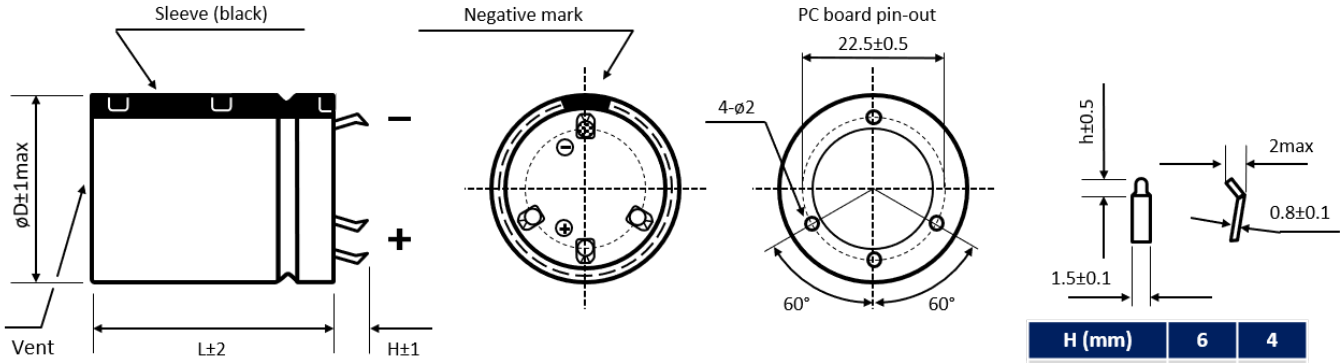

H (mm)	6	4
h (mm)	2.5	1.5

Standard: H = 6 ± 1mm. Also available H = 4 ± 1mm

Further possible terminal styles can be found in our packaging information liquid snap-in.

MULTIPLIER K_f for RIPPLE CURRENT vs. FREQUENCY

V_R (V) / Frequency (Hz)	50/60	100/120	300	1k	10k	50k - 100k
$10 \le V_R \le 100$	0.88	1	1.07	1.15	1.15	1.15
$160 \le V_R \le 250$	0.81	1	1.17	1.32	1.45	1.5
$315 \le V_R \le 500$	0.77	1	1.16	1.3	1.41	1.43

PRECAUTIONS, GUIDELINES AND PACKAGING INFORMATON

Unless otherwise agreed in individual specifications, all products are subject to our “General Precautions and Guidelines” as well as our “Packaging Information”. Please refer to the following pages in the table.

General Precautions and Guidelines	Packaging Information Liquid Snap-In
Page 837	Page 579

For further information please contact sales@capxon.org

USEFUL LIFE

$V_R \leq 100V$

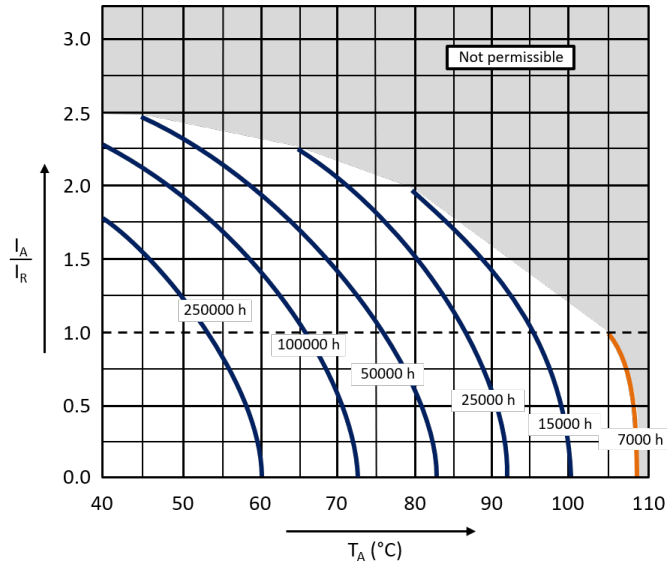

$V_R \geq 160V$

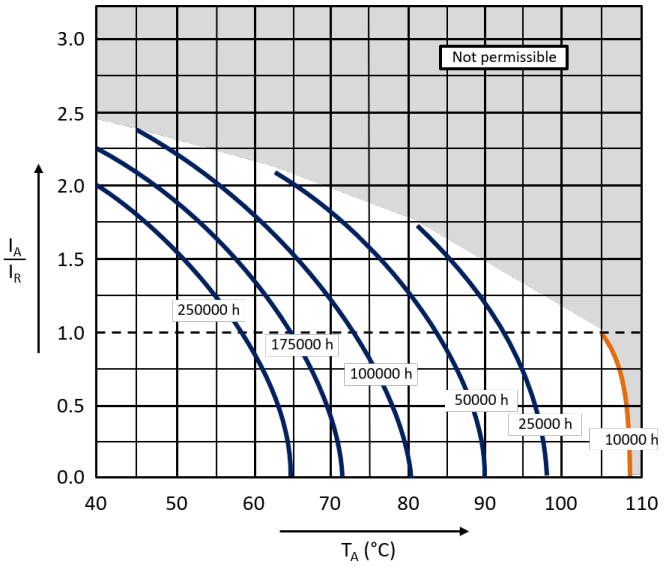

With: I_A: Application current
I_R: Rated ripple current (A RMS)
T_A: Application temperature of the capacitor

DISCLAIMER

All product related data (e.g. specification, statements and general information) are subject to change without any notice. It is necessary that the customer observes all product related technical / application information and handling instructions.

CapXon products are designed and manufactured according to severe quality and safety standards. Under no circumstance, CapXon warrants that any CapXon product is suitable for the purposes intended for your application, even CapXon knows the application. It is customer's duty and obligation to check and make sure that CapXon products are suitable for the purposes intended and select the correct and proper CapXon product. Customers are requested to perform a sufficient validation and reliability evaluation to assure needed safety level and reliability performance by suitable designs and to apply proper safeguards (e.g. redundancies, protective circuits).

Particular operating conditions (ambient temperature, ripple current, voltage, thermal resistance, etc.) as well as storage, production or assembly may affect the performance and the lifetime of the capacitor. Please consult CapXon for lifetime estimation, failure mode considerations or worst-case scenarios according to the product technology, product tolerances / deviations or change of the characteristics of the capacitor due to shipment, storage, handling, production and usage.

For aerospace or military application, life-saving, life-sustaining, safety critical applications or any application where failure may cause severe personal injury or death, please consult us before design-in the capacitor in your application.

Except for the written expressed warranties, CapXon does not impliedly, by assumption or whatever else, warrant, undertake, promise any other warranty or guaranty for any CapXon product.

For further information, please visit our website www.capxongroup.com or contact CapXon directly.

UL SERIES ▪ ULTRA LONG LIFE, AUTOMOTIVE 105°C TYPE



KEY FEATURES

AEC-Q 200 · LONG LIFE · HIGH VOLTAGE

- **ALUMINUM ELECTROLYTIC CAPACITOR** ▪ Snap-In type
- Useful life: 105°C ▪ 10 000 hours
- Extremely stable dissipation factor and leakage current
- Especially for applications with demanding operating environment
- AEC-Q200 version available

HF Halogen Free · RoHS & REACH COMPLIANT

SPECIFICATIONS

Items		Performance Characteristics			
Operating Temperature Range		-40 ~ +105°C		-25 ~ +105°C	
Rated Voltage Range	V_R	200 ~ 450V DC		500 ~ 550V DC	
Surge Voltage	V_S	($V_R \le 315V$) ▪ $V_S = 1.15 \cdot V_R$		($V_R > 315V$) ▪ $V_S = 1.10 \cdot V_R$	
Capacitance Range	C_R	82 ~ 2700µF		47 ~ 680µF	
Cap. Tolerance	ΔC	±20% (120Hz ▪ 20°C)			
Leakage Current (20°C ▪ V_R applied)	I_{LEAK}	≤ √3·C_R·V_R ▪ After 5 minutes [I_{LEAK} (µA) ; C_R (µF) ; V_R (V)]			
Dissipation Factor % (20°C ▪ 120Hz)	tanδ	V_R (V DC)	200 ~ 400	450 ~ 550	
		tanδ	15	20	
Self-Resistance (20°C ▪ 120Hz)	ESR	Not to exceed the values shown in standard ratings			
Low Temperature Characteristics at 120Hz	Z ratio max.	V_R (V DC)	200 ~ 250	315 ~ 450	500 ~ 550
		Z-25°C/Z+20°C	4	5	6
		Z-40°C/Z+20°C	7	10	-

Lifetime Test		
Useful Life 105°C (V_R & I_R applied)	Test	**10 000 hours**
	△C/C_R	≤ ±20% of initial measured value
	tanδ	≤ 200% of initial specified value
	I_{Leak}	≤ the initial specified value
	Deviation Rate @ Useful Life: 10 000 FIT = 1%/1000h with 60% confidence level ▪ parts show higher drift as test criteria	
Endurance 105°C (V_R & I_R applied)	Test	**5 000 hours**
	△C/C_R	≤ ±15% of initial measured value
	tanδ	≤ 175% of initial specified value
	I_{Leak}	≤ the initial specified value
Shelf Life 105°C (V_R = 0)	Test	**1 000 hours**
	△C/C_R	≤ ±15% of initial measured value
	tanδ	≤ 175% of initial specified value
	I_{Leak}	≤ the initial specified value
	Before measurement: Restore capacitor to 20°C, apply V_R for 30 min according JIS-C-5101-4	
Vibration Resistance Test	Max. 10g force, f_{RANGE} 10Hz … 55Hz, amplitude 0.75mm; X/Y/Z-axis each 2h; capacitor rigidly clamped by body to surface ▪ IEC 60068-2-6	

For further information please contact sales@capxon.org

STANDARD RATINGS

V_R (V)	C_R (µF)	ø D (mm)	L (mm)	Typ. ESR +20°C ▪ 120Hz (mΩ)	Max. ESR +20°C ▪ 120Hz (mΩ)	I_R ▪ Max. Ripple Current +105°C ▪ 120Hz (mA rms)	CapXon Part Number
200	180	22	20	580	1110	750	UL181M200M200A□□□
	220	22	25	470	900	800	UL221M200M250A□□□
	270	22	25	390	740	1310	UL271M200M250A□□□
	270	22	30	390	740	1350	UL271M200M300A□□□
	270	25	25	390	740	1350	UL271M200N250A□□□
	330	22	25	320	600	1410	UL331M200M250A□□□
	330	22	30	320	600	1530	UL331M200M300A□□□
	330	25	25	320	600	1480	UL331M200N250A□□□
	390	22	30	270	510	1630	UL391M200M300A□□□
	390	22	35	270	510	1680	UL391M200M350A□□□
	390	25	25	270	510	1630	UL391M200N250A□□□
	390	25	30	270	510	1680	UL391M200N300A□□□
	390	30	25	270	510	1680	UL391M200O250A□□□
	470	22	30	220	420	1720	UL471M200M300A□□□
	470	22	35	220	420	1840	UL471M200M350A□□□
	470	25	25	220	420	1630	UL471M200N250A□□□
	470	25	30	220	420	1750	UL471M200N300A□□□
	470	35	25	220	420	1750	UL471M200P250A□□□
	560	22	35	190	360	1950	UL561M200M350A□□□
	560	22	40	190	360	2070	UL561M200M400A□□□
	560	25	30	190	360	1840	UL561M200N300A□□□
	560	25	35	190	360	1920	UL561M200N350A□□□
	560	30	30	190	360	1840	UL561M200O300A□□□
	560	35	25	190	360	1840	UL561M200P250A□□□
	680	22	40	150	290	2220	UL681M200M400A□□□
	680	22	45	150	290	2320	UL681M200M450A□□□
	680	25	35	150	290	2110	UL681M200N350A□□□
	680	25	40	150	290	2320	UL681M200N400A□□□
	680	30	30	150	290	2110	UL681M200O300A□□□
	680	30	35	150	290	2320	UL681M200O350A□□□
	680	35	30	150	290	2320	UL681M200P300A□□□
	820	22	50	130	240	2600	UL821M200M500A□□□
	820	25	40	130	240	2370	UL821M200N400A□□□
	820	30	30	130	240	2110	UL821M200O300A□□□
	820	30	35	130	240	2370	UL821M200O350A□□□
	820	35	30	130	240	2370	UL821M200P300A□□□
	1000	22	60	110	200	3000	UL102M200M600A□□□
	1000	25	45	110	200	2630	UL102M200N450A□□□
	1000	30	35	110	200	2370	UL102M200O350A□□□
	1000	30	40	110	200	2420	UL102M200O400A□□□
	1000	35	30	110	200	2370	UL102M200P300A□□□
	1000	35	35	110	200	2420	UL102M200P350A□□□
	1200	25	50	89	170	2880	UL122M200N500A□□□
	1200	30	40	89	170	2550	UL122M200O400A□□□

□□□ See description at end of standard ratings

For further information please contact sales@capxon.org

STANDARD RATINGS

V_R (V)	C_R (µF)	ø D (mm)	L (mm)	Typ. ESR +20°C ▪ 120Hz (mΩ)	Max. ESR +20°C ▪ 120Hz (mΩ)	I_R ▪ Max. Ripple Current +105°C ▪ 120Hz (mA rms)	CapXon Part Number
200	1200	35	30	89	170	2440	UL122M200P300A□□□
	1200	35	35	89	170	2880	UL122M200P350A□□□
	1500	30	45	68	130	2820	UL152M200O450A□□□
	1500	30	50	68	130	3000	UL152M200O500A□□□
	1500	35	35	68	130	2980	UL152M200P350A□□□
	1500	35	40	68	130	3080	UL152M200P400A□□□
	1800	30	50	58	110	3080	UL182M200O500A□□□
	1800	35	40	58	110	3180	UL182M200P400A□□□
	1800	35	45	58	110	3280	UL182M200P450A□□□
	2200	35	50	48	90	3450	UL222M200P500A□□□
	2700	35	60	39	74	4000	UL272M200P600A□□□
250	220	22	25	470	900	850	UL221M250M250A□□□
	270	22	25	390	740	1320	UL271M250M250A□□□
	270	22	30	390	740	1360	UL271M250M300A□□□
	270	25	25	390	740	1360	UL271M250N250A□□□
	330	22	30	320	600	1550	UL331M250M300A□□□
	330	22	35	320	600	1600	UL331M250M350A□□□
	330	25	25	320	600	1450	UL331M250N250A□□□
	330	25	30	320	600	1600	UL331M250N300A□□□
	390	22	35	270	510	1750	UL391M250M350A□□□
	390	22	40	270	510	1800	UL391M250M400A□□□
	390	25	30	270	510	1680	UL391M250N300A□□□
	390	25	35	270	510	1730	UL391M250N350A□□□
	390	30	30	270	510	1730	UL391M250O300A□□□
	470	22	40	220	420	1970	UL471M250M400A□□□
	470	22	45	220	420	2020	UL471M250M450A□□□
	470	25	30	220	420	1750	UL471M250N300A□□□
	470	25	35	220	420	1800	UL471M250N350A□□□
	470	30	25	220	420	1750	UL471M250O250A□□□
	470	30	30	220	420	1800	UL471M250O300A□□□
	560	22	45	190	360	2200	UL561M250M450A□□□
	560	25	40	190	360	2200	UL561M250N400A□□□
	560	30	30	190	360	1970	UL561M250O300A□□□
	560	30	35	190	360	2050	UL561M250O350A□□□
	560	35	30	190	360	2050	UL561M250P300A□□□
	680	22	50	150	290	2450	UL681M250M500A□□□
	680	25	45	150	290	2250	UL681M250N450A□□□
	680	30	35	150	290	2180	UL681M250O350A□□□
	680	30	40	150	290	2250	UL681M250O400A□□□
	680	35	30	150	290	2180	UL681M250P300A□□□
	820	25	50	130	240	2490	UL821M250N500A□□□
	820	30	45	130	240	2190	UL821M250O450A□□□
	820	35	35	130	240	2150	UL821M250P350A□□□
	1000	25	55	110	200	2910	UL102M250N550A□□□

□□□ See description at end of standard ratings

For further information please contact sales@capxon.org

STANDARD RATINGS

V_R (V)	C_R (µF)	ø D (mm)	L (mm)	Typ. ESR +20°C ▪ 120Hz (mΩ)	Max. ESR +20°C ▪ 120Hz (mΩ)	I_R ▪ Max. Ripple Current +105°C ▪ 120Hz (mA rms)	CapXon Part Number
250	1000	30	40	110	200	2440	UL102M250O400A□□□
	1000	30	45	110	200	2540	UL102M250O450A□□□
	1000	35	35	110	200	2380	UL102M250P350A□□□
	1000	35	40	110	200	2540	UL102M250P400A□□□
	1200	30	45	89	170	2680	UL122M250O450A□□□
	1200	30	50	89	170	2730	UL122M250O500A□□□
	1200	35	40	89	170	2720	UL122M250P400A□□□
	1500	30	55	68	130	3150	UL152M250O550A□□□
	1500	35	45	68	130	3150	UL152M250P450A□□□
	1500	35	50	68	130	3200	UL152M250P500A□□□
	1800	35	50	58	110	3420	UL182M250P500A□□□
	1800	35	55	58	110	3600	UL182M250P550A□□□
	2200	35	60	48	90	3750	UL222M250P600A□□□
315	120	22	25	870	1660	720	UL121M315M250A□□□
	150	22	25	700	1330	1000	UL151M315M250A□□□
	150	22	30	700	1330	1030	UL151M315M300A□□□
	150	30	25	700	1330	1000	UL151M315O250A□□□
	180	22	30	580	1110	1140	UL181M315M300A□□□
	180	22	35	580	1110	1180	UL181M315M350A□□□
	180	25	30	580	1110	1180	UL181M315N300A□□□
	220	22	35	470	900	1310	UL221M315M350A□□□
	220	22	40	470	900	1350	UL221M315M400A□□□
	220	25	30	470	900	1310	UL221M315N300A□□□
	220	25	35	470	900	1350	UL221M315N350A□□□
	220	30	25	470	900	1310	UL221M315O250A□□□
	270	22	40	390	740	1490	UL271M315M400A□□□
	270	22	45	390	740	1540	UL271M315M450A□□□
	270	25	35	390	740	1390	UL271M315N350A□□□
	270	25	40	390	740	1540	UL271M315N400A□□□
	270	30	30	390	740	1390	UL271M315O300A□□□
	330	22	45	320	600	1690	UL331M315M450A□□□
	330	22	50	320	600	1760	UL331M315M500A□□□
	330	25	35	320	600	1590	UL331M315N350A□□□
	330	25	40	320	600	1630	UL331M315N400A□□□
	330	30	25	320	600	1410	UL331M315O250A□□□
	330	30	30	320	600	1460	UL331M315O300A□□□
	330	35	25	320	600	1460	UL331M315P250A□□□
	390	22	50	270	510	1870	UL391M315M500A□□□
	390	25	40	270	510	1780	UL391M315N400A□□□
	390	25	45	270	510	1830	UL391M315N450A□□□
	390	30	30	270	510	1630	UL391M315O300A□□□
	390	30	35	270	510	1680	UL391M315O350A□□□
	390	35	25	270	510	1480	UL391M315P250A□□□
	390	35	30	270	510	1550	UL391M315P300A□□□

□□□ See description at end of standard ratings

For further information please contact sales@capxon.org

STANDARD RATINGS

V_R (V)	C_R (µF)	ø D (mm)	L (mm)	Typ. ESR +20°C ▪ 120Hz (mΩ)	Max. ESR +20°C ▪ 120Hz (mΩ)	I_R ▪ Max. Ripple Current +105°C ▪ 120Hz (mA rms)	CapXon Part Number
315	470	22	55	220	420	2090	UL471M315M550A□□□
	470	25	45	220	420	1990	UL471M315N450A□□□
	470	30	35	220	420	1860	UL471M315O350A□□□
	470	30	40	220	420	1990	UL471M315O400A□□□
	470	35	30	220	420	1740	UL471M315P300A□□□
	470	35	35	220	420	1990	UL471M315P350A□□□
	560	22	60	190	360	2290	UL561M315M600A□□□
	560	25	50	190	360	2210	UL561M315N500A□□□
	560	30	40	190	360	2080	UL561M315O400A□□□
	560	30	45	190	360	2160	UL561M315O450A□□□
	560	35	30	190	360	2080	UL561M315P300A□□□
	560	35	35	190	360	2160	UL561M315P350A□□□
	680	25	55	150	290	2440	UL681M315N550A□□□
	680	25	60	150	290	2500	UL681M315N600A□□□
	680	30	45	150	290	2320	UL681M315O450A□□□
	680	30	50	150	290	2400	UL681M315O500A□□□
	680	35	35	150	290	2160	UL681M315P350A□□□
	680	35	40	150	290	2130	UL681M315P400A□□□
	820	30	50	130	240	2550	UL821M315O500A□□□
	820	30	55	130	240	2590	UL821M315O550A□□□
	820	35	40	130	240	2260	UL821M315P400A□□□
	820	35	45	130	240	2350	UL821M315P450A□□□
	1000	30	55	110	200	2780	UL102M315O550A□□□
	1000	30	60	110	200	2820	UL102M315O600A□□□
	1000	35	50	110	200	2700	UL102M315P500A□□□
	1200	30	60	89	170	3010	UL122M315O600A□□□
	1200	35	55	89	170	2920	UL122M315P550A□□□
	1200	35	60	89	170	2960	UL122M315P600A□□□
	1500	35	60	68	130	3420	UL152M315P600A□□□
	1500	35	65	68	130	3620	UL152M315P650A□□□
350	100	22	25	1050	1990	500	UL101M350M250A□□□
	120	22	25	870	1660	920	UL121M350M250A□□□
	120	22	30	870	1660	940	UL121M350M300A□□□
	150	22	30	700	1330	1080	UL151M350M300A□□□
	150	25	25	700	1330	1050	UL151M350N250A□□□
	180	22	35	580	1110	1220	UL181M350M350A□□□
	180	22	40	580	1110	1270	UL181M350M400A□□□
	180	25	30	580	1110	1200	UL181M350N300A□□□
	220	22	40	470	900	1390	UL221M350M400A□□□
	220	22	45	470	900	1430	UL221M350M450A□□□
	220	25	30	470	900	1300	UL221M350N300A□□□
	220	25	35	470	900	1350	UL221M350N350A□□□
	220	30	25	470	900	1300	UL221M350O250A□□□
	270	22	45	390	740	1570	UL271M350M450A□□□

□□□ See description at end of standard ratings

For further information please contact sales@capxon.org

STANDARD RATINGS

V_R (V)	C_R (µF)	ø D (mm)	L (mm)	Typ. ESR +20°C ▪ 120Hz (mΩ)	Max. ESR +20°C ▪ 120Hz (mΩ)	I_R ▪ Max. Ripple Current +105°C ▪ 120Hz (mA rms)	CapXon Part Number
350	270	22	50	390	740	1620	UL271M350M500A□□□
	270	25	35	390	740	1490	UL271M350N350A□□□
	270	25	40	390	740	1530	UL271M350N400A□□□
	270	30	25	390	740	1340	UL271M350O250A□□□
	270	30	30	390	740	1490	UL271M350O300A□□□
	270	35	25	390	740	1420	UL271M350P250A□□□
	330	22	50	320	600	1770	UL331M350M500A□□□
	330	25	40	320	600	1690	UL331M350N400A□□□
	330	25	45	320	600	1770	UL331M350N450A□□□
	330	30	30	320	600	1560	UL331M350O300A□□□
	330	30	35	320	600	1690	UL331M350O350A□□□
	330	35	25	320	600	1560	UL331M350P250A□□□
	390	22	55	270	510	1960	UL391M350M550A□□□
	390	25	45	270	510	1880	UL391M350N450A□□□
	390	25	50	270	510	1970	UL391M350N500A□□□
	390	30	35	270	510	1770	UL391M350O350A□□□
	390	30	40	270	510	1830	UL391M350O400A□□□
	390	30	45	270	510	1920	UL391M350O450A□□□
	390	35	30	270	510	1660	UL391M350P300A□□□
	390	35	35	270	510	1730	UL391M350P350A□□□
	470	25	50	220	420	2090	UL471M350N500A□□□
	470	25	55	220	420	2140	UL471M350N550A□□□
	470	30	40	220	420	1990	UL471M350O400A□□□
	470	30	45	220	420	2090	UL471M350O450A□□□
	470	35	35	220	420	1900	UL471M350P350A□□□
	560	25	55	190	360	2300	UL561M350N550A□□□
	560	25	60	190	360	2380	UL561M350N600A□□□
	560	30	45	190	360	2200	UL561M350O450A□□□
	560	30	50	190	360	2300	UL561M350O500A□□□
	560	35	40	190	360	2130	UL561M350P400A□□□
	560	35	45	190	360	2350	UL561M350P450A□□□
	680	30	50	150	290	2430	UL681M350O500A□□□
	680	30	55	150	290	2480	UL681M350O550A□□□
	680	35	40	150	290	2170	UL681M350P400A□□□
	680	35	45	150	290	2400	UL681M350P450A□□□
	820	30	55	130	240	2500	UL821M350O550A□□□
	820	30	60	130	240	2650	UL821M350O600A□□□
	820	35	45	130	240	2450	UL821M350P450A□□□
	820	35	50	130	240	2500	UL821M350P500A□□□
	1000	35	50	110	200	2800	UL102M350P500A□□□
	1000	35	60	110	200	3000	UL102M350P600A□□□
	1000	40	50	110	200	3000	UL102M350Q500A□□□
	1200	35	60	89	170	3010	UL122M350P600A□□□
	1200	35	70	89	170	3230	UL122M350P700A□□□

□□□ See description at end of standard ratings

For further information please contact sales@capxon.org

STANDARD RATINGS

V_R (V)	C_R (µF)	ø D (mm)	L (mm)	Typ. ESR +20°C ▪ 120Hz (mΩ)	Max. ESR +20°C ▪ 120Hz (mΩ)	I_R ▪ Max. Ripple Current +105°C ▪ 120Hz (mA rms)	CapXon Part Number
350	1200	40	60	89	170	3250	UL122M350Q600A□□□
	1500	40	80	68	130	4210	UL152M350Q800A□□□
	1500	45	60	68	130	4060	UL152M350V600A□□□
	1800	40	90	58	110	4900	UL182M350Q900A□□□
	1800	45	70	58	110	4750	UL182M350V700A□□□
	2200	45	85	48	90	5400	UL222M350V850A□□□
	2700	45	100	39	74	6430	UL272M350VA00A□□□
400	82	22	25	1280	2430	550	UL820M400M250A□□□
	100	22	25	1050	1990	660	UL101M400M250A□□□
	100	22	30	1050	1990	680	UL101M400M300A□□□
	100	25	25	1050	1990	680	UL101M400N250A□□□
	120	22	25	870	1660	700	UL121M400M250A□□□
	120	22	30	870	1660	760	UL121M400M300A□□□
	120	25	25	870	1660	760	UL121M400N250A□□□
	150	22	30	700	1330	850	UL151M400M300A□□□
	150	22	35	700	1330	900	UL151M400M350A□□□
	150	25	25	700	1330	850	UL151M400N250A□□□
	150	25	30	700	1330	900	UL151M400N300A□□□
	180	22	35	580	1110	990	UL181M400M350A□□□
	180	22	40	580	1110	1050	UL181M400M400A□□□
	180	25	30	580	1110	1050	UL181M400N300A□□□
	180	25	35	580	1110	1100	UL181M400N350A□□□
	180	30	25	580	1110	1050	UL181M400O250A□□□
	220	22	45	470	900	1120	UL221M400M450A□□□
	220	22	50	470	900	1160	UL221M400M500A□□□
	220	25	30	470	900	1070	UL221M400N300A□□□
	220	25	35	470	900	1120	UL221M400N350A□□□
	220	30	25	470	900	1100	UL221M400O250A□□□
	220	30	30	470	900	1160	UL221M400O300A□□□
	270	22	50	390	740	1260	UL271M400M500A□□□
	270	25	40	390	740	1260	UL271M400N400A□□□
	270	25	45	390	740	1290	UL271M400N450A□□□
	270	30	30	390	740	1260	UL271M400O300A□□□
	270	30	35	390	740	1290	UL271M400O350A□□□
	270	35	25	390	740	1260	UL271M400P250A□□□
	330	22	55	320	600	1450	UL331M400M550A□□□
	330	25	40	320	600	1350	UL331M400N400A□□□
	330	25	45	320	600	1420	UL331M400N450A□□□
	330	30	30	320	600	1350	UL331M400O300A□□□
	330	30	35	320	600	1420	UL331M400O350A□□□
	330	35	30	320	600	1460	UL331M400P300A□□□
	390	25	50	270	510	1620	UL391M400N500A□□□
	390	25	55	270	510	1690	UL391M400N550A□□□
	390	30	40	270	510	1620	UL391M400O400A□□□

□□□ See description at end of standard ratings

For further information please contact sales@capxon.org

STANDARD RATINGS

V_R (V)	C_R (µF)	ø D (mm)	L (mm)	Typ. ESR +20°C ▪ 120Hz (mΩ)	Max. ESR +20°C ▪ 120Hz (mΩ)	I_R ▪ Max. Ripple Current +105°C ▪ 120Hz (mA rms)	CapXon Part Number
400	390	30	45	270	510	1690	UL391M400O450A□□□
	390	35	30	270	510	1590	UL391M400P300A□□□
	390	35	35	270	510	1690	UL391M400P350A□□□
	470	30	45	220	420	1880	UL471M400O450A□□□
	470	30	50	220	420	1970	UL471M400O500A□□□
	470	35	35	220	420	1860	UL471M400P350A□□□
	470	35	40	220	420	1960	UL471M400P400A□□□
	560	35	40	190	360	2130	UL561M400P400A□□□
	560	35	45	190	360	2250	UL561M400P450A□□□
	680	35	45	150	290	2480	UL681M400P450A□□□
	680	35	50	150	290	2600	UL681M400P500A□□□
	820	35	55	130	240	2670	UL821M400P550A□□□
	820	35	60	130	240	2780	UL821M400P600A□□□
	820	40	50	130	240	2780	UL821M400Q500A□□□
	1000	35	65	110	200	3250	UL102M400P650A□□□
	1000	40	55	110	200	3250	UL102M400Q550A□□□
	1200	35	75	89	170	3720	UL122M400P750A□□□
	1200	40	65	89	170	3720	UL122M400Q650A□□□
	1200	45	55	89	170	3720	UL122M400V550A□□□
	1500	40	80	68	130	4560	UL152M400Q800A□□□
	1500	45	65	68	130	4560	UL152M400V650A□□□
	1800	45	80	58	110	5360	UL182M400V800A□□□
450	82	22	25	1700	3230	600	UL820M450M250A□□□
	100	22	25	1390	2650	640	UL101M450M250A□□□
	100	22	30	1390	2650	690	UL101M450M300A□□□
	100	25	25	1390	2650	690	UL101M450N250A□□□
	120	22	30	1160	2210	760	UL121M450M300A□□□
	120	22	35	1160	2210	810	UL121M450M350A□□□
	120	25	25	1160	2210	760	UL121M450N250A□□□
	120	25	30	1160	2210	810	UL121M450N300A□□□
	150	22	35	930	1770	900	UL151M450M350A□□□
	150	22	40	930	1770	960	UL151M450M400A□□□
	150	25	30	930	1770	900	UL151M450N300A□□□
	150	25	35	930	1770	960	UL151M450N350A□□□
	150	30	25	930	1770	900	UL151M450O250A□□□
	150	30	30	930	1770	960	UL151M450O300A□□□
	180	22	40	770	1470	1050	UL181M450M400A□□□
	180	22	45	770	1470	1100	UL181M450M450A□□□
	180	25	30	770	1470	1050	UL181M450N300A□□□
	180	25	35	770	1470	1100	UL181M450N350A□□□
	180	30	25	770	1470	1030	UL181M450O250A□□□
	180	30	30	770	1470	1110	UL181M450O300A□□□
	180	35	25	770	1470	1110	UL181M450P250A□□□
	220	22	45	640	1210	1160	UL221M450M450A□□□

□□□ See description at end of standard ratings

For further information please contact sales@capxon.org

STANDARD RATINGS

V_R (V)	C_R (µF)	ø D (mm)	L (mm)	Typ. ESR +20°C ▪ 120Hz (mΩ)	Max. ESR +20°C ▪ 120Hz (mΩ)	I_R ▪ Max. Ripple Current +105°C ▪ 120Hz (mA rms)	CapXon Part Number
450	220	25	35	640	1210	1150	UL221M450N350A□□□
	220	25	40	640	1210	1180	UL221M450N400A□□□
	220	30	30	640	1210	1150	UL221M450O300A□□□
	220	30	35	640	1210	1200	UL221M450O350A□□□
	220	35	25	640	1210	1150	UL221M450P250A□□□
	270	22	55	520	980	1310	UL271M450M550A□□□
	270	25	45	520	980	1290	UL271M450N450A□□□
	270	25	50	520	980	1310	UL271M450N500A□□□
	270	30	30	520	980	1230	UL271M450O300A□□□
	270	30	40	520	980	1350	UL271M450O400A□□□
	270	35	30	520	980	1350	UL271M450P300A□□□
	330	25	50	420	800	1500	UL331M450N500A□□□
	330	30	40	420	800	1500	UL331M450O400A□□□
	330	30	45	420	800	1580	UL331M450O450A□□□
	330	35	30	420	800	1500	UL331M450P300A□□□
	330	35	35	420	800	1580	UL331M450P350A□□□
	390	25	55	360	680	1690	UL391M450N550A□□□
	390	30	45	360	680	1720	UL391M450O450A□□□
	390	30	50	360	680	1800	UL391M450O500A□□□
	390	35	35	360	680	1720	UL391M450P350A□□□
	390	35	40	360	680	1790	UL391M450P400A□□□
	470	30	50	290	560	1970	UL471M450O500A□□□
	470	30	55	290	560	2060	UL471M450O550A□□□
	470	35	40	290	560	1950	UL471M450P400A□□□
	470	35	45	290	560	2060	UL471M450P450A□□□
	560	30	55	250	470	2240	UL561M450O550A□□□
	560	35	45	250	470	2160	UL561M450P450A□□□
	560	35	50	250	470	2360	UL561M450P500A□□□
	680	35	50	210	390	2500	UL681M450P500A□□□
	680	35	55	210	390	2620	UL681M450P550A□□□
	820	35	65	170	320	3000	UL821M450P650A□□□
	820	40	55	170	320	3000	UL821M450Q550A□□□
	1000	35	70	140	270	3100	UL102M450P700A□□□
	1000	35	80	140	270	3560	UL102M450P800A□□□
	1000	40	70	140	270	3600	UL102M450Q700A□□□
	1000	45	60	140	270	3600	UL102M450V600A□□□
	1200	40	80	120	220	3950	UL122M450Q800A□□□
	1500	45	80	95	180	4800	UL152M450V800A□□□
	1800	45	90	79	150	5670	UL182M450V900A□□□
500	47	22	25	2970	5640	400	UL470M500M250A□□□
	56	22	25	2490	4740	430	UL560M500M250A□□□
	56	22	30	2490	4740	470	UL560M500M300A□□□
	56	25	25	2490	4740	470	UL560M500N250A□□□
	68	22	30	2050	3900	520	UL680M500M300A□□□

□□□ See description at end of standard ratings

For further information please contact sales@capxon.org

STANDARD RATINGS

V_R (V)	C_R (µF)	ø D (mm)	L (mm)	Typ. ESR +20°C ▪ 120Hz (mΩ)	Max. ESR +20°C ▪ 120Hz (mΩ)	I_R ▪ Max. Ripple Current +105°C ▪ 120Hz (mA rms)	CapXon Part Number
500	68	22	35	2050	3900	550	UL680M500M350A□□□
	68	25	25	2050	3900	520	UL680M500N250A□□□
	68	25	30	2050	3900	550	UL680M500N300A□□□
	82	22	35	1700	3230	610	UL820M500M350A□□□
	82	25	30	1700	3230	610	UL820M500N300A□□□
	100	22	40	1390	2650	720	UL101M500M400A□□□
	100	25	35	1390	2650	720	UL101M500N350A□□□
	100	30	30	1390	2650	720	UL101M500O300A□□□
	120	22	45	1160	2210	740	UL121M500M450A□□□
	120	25	40	1160	2210	740	UL121M500N400A□□□
	120	30	35	1160	2210	770	UL121M500O350A□□□
	120	35	30	1160	2210	800	UL121M500P300A□□□
	150	22	50	930	1770	960	UL151M500M500A□□□
	150	25	45	930	1770	980	UL151M500N450A□□□
	150	30	35	930	1770	920	UL151M500O350A□□□
	150	35	30	930	1770	920	UL151M500P300A□□□
	180	25	50	770	1470	1130	UL181M500N500A□□□
	180	30	35	770	1470	1050	UL181M500O350A□□□
	180	35	30	770	1470	1100	UL181M500P300A□□□
	220	25	50	640	1210	1220	UL221M500N500A□□□
	220	30	45	640	1210	1250	UL221M500O450A□□□
	220	35	30	640	1210	1100	UL221M500P300A□□□
	220	35	35	640	1210	1230	UL221M500P350A□□□
	270	30	50	520	980	1510	UL271M500O500A□□□
	270	35	35	520	980	1310	UL271M500P350A□□□
	270	35	40	520	980	1420	UL271M500P400A□□□
	330	35	40	420	800	1480	UL331M500P400A□□□
	330	35	45	420	800	1560	UL331M500P450A□□□
	390	35	50	360	680	1780	UL391M500P500A□□□
	470	35	55	290	560	2140	UL471M500P550A□□□
	470	35	60	290	560	2260	UL471M500P600A□□□
	560	35	65	250	470	2380	UL561M500P650A□□□
	680	40	65	210	390	2520	UL681M500Q650A□□□
550	220	35	40	640	1210	1300	UL221M550P400A□□□
	270	35	50	520	980	1600	UL271M550P500A□□□
	330	35	55	420	800	1630	UL331M550P550A□□□
	390	35	60	360	680	1800	UL391M550P600A□□□
	470	35	70	290	560	2100	UL471M550P700A□□□

□□□: Enter **P6** for standard type ▪ 6mm pin length
□□□: Enter **P6X** for standard type ▪ 6mm pin length ▪ AEC-Q200

□□□: Enter **Z6** for 3-pin type ▪ 6mm pin length
□□□: Enter **Z6X** for 3-pin type ▪ 6mm pin length ▪ AEC-Q200

□□□: Enter **Y6** for multi-pin type ▪ 6mm pin length
□□□: Enter **Y6X** for multi-pin type ▪ 6mm pin length ▪ AEC-Q200

□□□: Enter **P4** for standard type ▪ 4mm pin length
□□□: Enter **P4X** for standard type ▪ 4mm pin length ▪ AEC-Q200

□□□: Enter **Z4** for 3-pin type ▪ 4mm pin length
□□□: Enter **Z4X** for 3-pin type ▪ 4mm pin length ▪ AEC-Q200

□□□: Enter **Y4** for multi-pin type ▪ 4mm pin length
□□□: Enter **Y4X** for multi-pin type ▪ 4mm pin length ▪ AEC-Q200

For further information please contact sales@capxon.org

DIMENSIONS ▪ All dimensions in mm

2-pin version ▪ Standard type

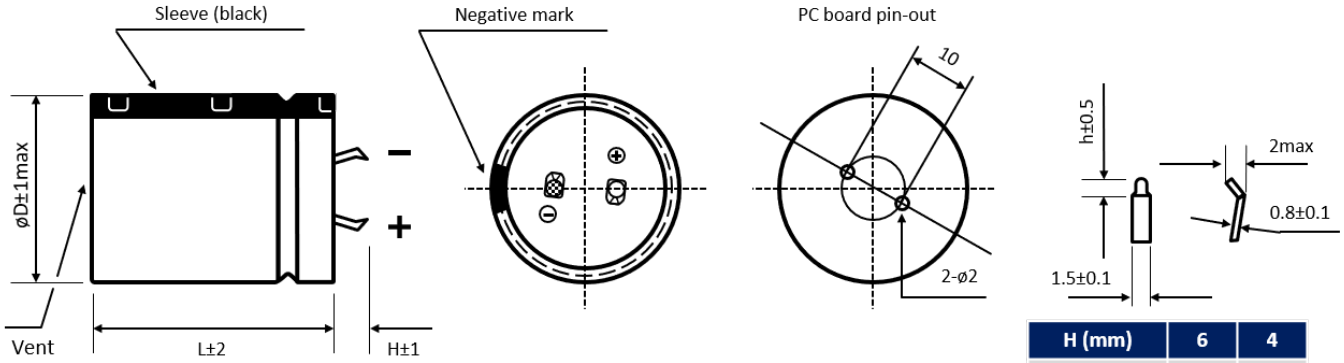

H (mm)	6	4
h (mm)	2.5	1.5

Standard: H = 6 ± 1mm. Also available H = 4 ± 1mm

3-pin version ▪ Polarity protection

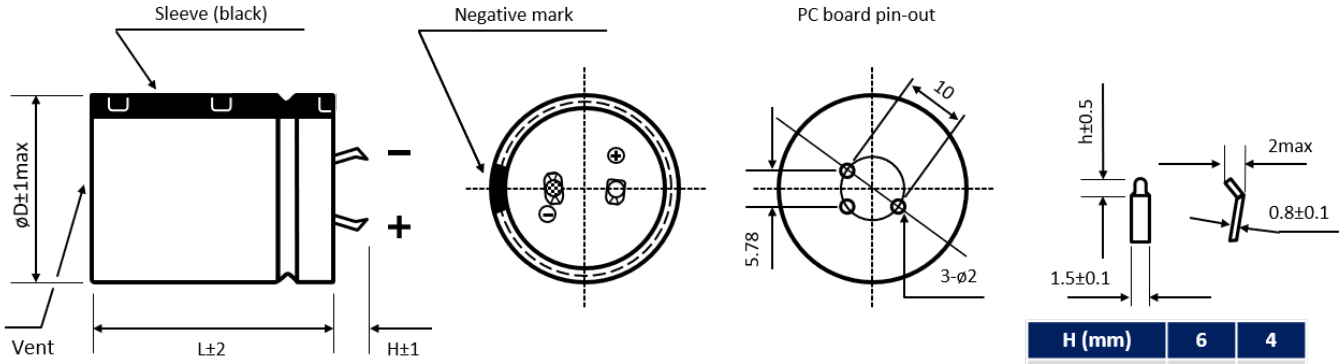

H (mm)	6	4
h (mm)	2.5	1.5

Standard: H = 4 ± 1mm. Also available H = 6 ± 1mm

Multipin version ▪ Diameter ø D ≥ 30 mm

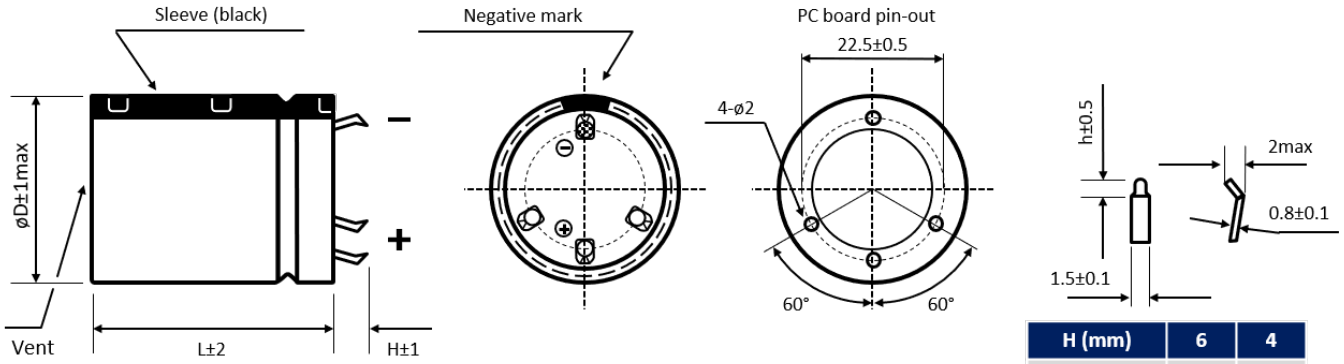

H (mm)	6	4
h (mm)	2.5	1.5

Standard: H = 6 ± 1mm. Also available H = 4 ± 1mm

Further possible terminal styles can be found in our packaging information liquid snap-in.

MULTIPLIER K_f for RIPPLE CURRENT vs. FREQUENCY

V_R (V) / Frequency (Hz)	50/60	100/120	300	1k	10k	50k - 100k
$200 \le V_R \le 250$	0.81	1	1.17	1.32	1.45	1.5
$315 \le V_R \le 550$	0.77	1	1.16	1.3	1.41	1.43

PRECAUTIONS, GUIDELINES AND PACKAGING INFORMATON

Unless otherwise agreed in individual specifications, all products are subject to our “General Precautions and Guidelines” as well as our “Packaging Information”. Please refer to the following pages in the table.

General Precautions and Guidelines	Packaging Information Liquid Snap-In
Page 837	Page 579

USEFUL LIFE

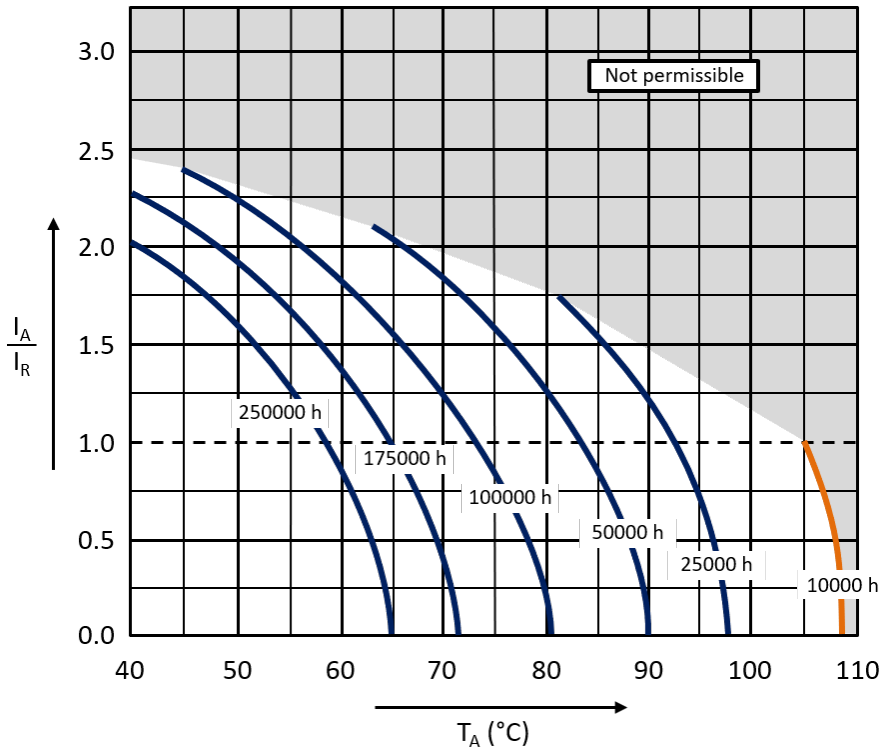

With: I_A: Application current
I_R: Rated ripple current (A RMS)
T_A: Application temperature of the capacitor

For further information please contact sales@capxon.org

DISCLAIMER

All product related data (e.g. specification, statements and general information) are subject to change without any notice. It is necessary that the customer observes all product related technical / application information and handling instructions.

CapXon products are designed and manufactured according to severe quality and safety standards. Under no circumstance, CapXon warrants that any CapXon product is suitable for the purposes intended for your application, even CapXon knows the application. It is customer's duty and obligation to check and make sure that CapXon products are suitable for the purposes intended and select the correct and proper CapXon product. Customers are requested to perform a sufficient validation and reliability evaluation to assure needed safety level and reliability performance by suitable designs and to apply proper safeguards (e.g. redundancies, protective circuits).

Particular operating conditions (ambient temperature, ripple current, voltage, thermal resistance, etc.) as well as storage, production or assembly may affect the performance and the lifetime of the capacitor. Please consult CapXon for lifetime estimation, failure mode considerations or worst-case scenarios according to the product technology, product tolerances / deviations or change of the characteristics of the capacitor due to shipment, storage, handling, production and usage.

For aerospace or military application, life-saving, life-sustaining, safety critical applications or any application where failure may cause severe personal injury or death, please consult us before design-in the capacitor in your application.

Except for the written expressed warranties, CapXon does not impliedly, by assumption or whatever else, warrant, undertake, promise any other warranty or guaranty for any CapXon product.

For further information, please visit our website www.capxongroup.com or contact CapXon directly.

HC SERIES ▪ HIGH RELIABILITY, AUTOMOTIVE 125°C TYPE



KEY FEATURES

AEC-Q 200 · HIGH VIBRATION · °C HIGH TEMPERATURE

- **DOUBLE-CRAMPING** ▪ Snap-In type
- Useful life: 125°C ▪ 4 000 hours
- Low ESR and high ripple current
- High vibration (up to 30g) stability. Consult CapXon for test details
- AEC-Q200 version available

HF Halogen Free · RoHS & REACH COMPLIANT

SPECIFICATIONS

Items		Performance Characteristics
Operating Temperature Range		-55 ~ +125°C
Rated Voltage Range	V_R	25 ~ 63V DC
Surge Voltage	V_S	$V_S = 1.15 \cdot V_R$
Capacitance Range	C_R	600 ~ 3300µF
Cap. Tolerance	ΔC	±20% (120Hz ▪ 20°C)
Leakage Current (20°C ▪ V_R applied)	I_{LEAK}	≤ √3·C_R·V_R ▪ After 5 minutes [I_{LEAK} (µA) ; C_R (µF) ; V_R (V)]
Dissipation Factor % (20°C ▪ 120Hz)	tanδ	Not to exceed the values shown in standard ratings
Self-Resistance (20°C ▪ 100kHz)	ESR	Not to exceed the values shown in standard ratings

Low Temperature Characteristics at 120Hz	Z ratio max.	V_R (V DC)	25	35	50	63
		Z-25°C/Z+20°C	4	4	4	4
		Z-55°C/Z+20°C	10	8	6	6

Lifetime Test		
Useful Life 125°C (V_R & I_R applied)	Test	**4 000 hours**
	△C/C_R	≤ ±30% of initial measured value
	tanδ	≤ 300% of initial specified value
	I_{Leak}	≤ the initial specified value
	Deviation Rate @ Useful Life: 10 000 FIT = 1%/1000h with 60% confidence level ▪ parts show higher drift as test criteria	
Endurance 125°C (V_R & I_R applied)	Test	**3 000 hours**
	△C/C_R	≤ ±20% of initial measured value
	tanδ	≤ 200% of initial specified value
	I_{Leak}	≤ the initial specified value
Shelf Life 125°C (V_R = 0)	Test	**1 000 hours**
	△C/C_R	≤ ±20% of initial measured value
	tanδ	≤ 200% of initial specified value
	I_{Leak}	≤ the initial specified value
	Before measurement: Restore capacitor to 20°C, apply V_R for 30 min according JIS-C-5101-4	
Vibration Resistance Test	Max. 30g force, f_{RANGE} 10Hz … 2kHz, amplitude max. 2mm; X/Y/Z-axis each 2h; capacitor rigidly clamped by body to surface ▪ JIS-C-5101-1 (2010)	

For further information please contact sales@capxon.org

STANDARD RATINGS

V_R (V)	C_R (µF)	ø D (mm)	L (mm)	I_{LEAK} (µA, 5min)	tanδ +20°C ▪ 120Hz (%)	Max. ESR +20°C ▪ 100kHz (mΩ)	I_R ▪ Max. Ripple Current +125°C ▪ 100kHz (mA rms)	CapXon Part Number
25	1800	20	30	637	20	28	4100	HC182M025L300A□□□
	2200	20	35	704	20	22	4870	HC222M025L350A□□□
	3300	20	40	862	20	16	5500	HC332M025L400A□□□
35	1200	20	30	615	15	31	3900	HC122M035L300A□□□
	1500	20	35	687	15	26	5000	HC152M035L350A□□□
	2200	20	40	832	15	19	5900	HC222M035L400A□□□
50	1200	20	35	735	10	36	4200	HC122M050L350A□□□
	1500	20	40	822	10	33	4900	HC152M050L400A□□□
63	600	20	30	583	10	50	3740	HC601M063L300A□□□
	820	20	35	682	10	39	4300	HC821M063L350A□□□
	1000	20	40	753	10	31	5250	HC102M063L400A□□□

POSSIBLE CAN SIZES ▪ Please consult us to individual requirements

Size with ø D 20		Size with ø D 22		Size with ø D 25		Size with ø D 30		Size with ø D 35	
ø D (mm)	L (mm)	ø D (mm)	L (mm)	ø D (mm)	L (mm)	ø D (mm)	L (mm)	ø D (mm)	L (mm)
20	30	22	30	25	30	30	30	35	30
20	35	22	35	25	35	30	35	35	35
20	40	22	40	25	40	30	40	35	40
		22	45	25	45	30	45	35	45

□□□: Enter **P6** for standard type ▪ 6mm pin length
□□□: Enter **P6X** for standard type ▪ 6mm pin length ▪ AEC-Q200

□□□: Enter **Z6** for 3-pin type ▪ 6mm pin length
□□□: Enter **Z6X** for 3-pin type ▪ 6mm pin length ▪ AEC-Q200

□□□: Enter **Y6** for multi-pin type ▪ 6mm pin length
□□□: Enter **Y6X** for multi-pin type ▪ 6mm pin length ▪ AEC-Q200

□□□: Enter **P4** for standard type ▪ 4mm pin length
□□□: Enter **P4X** for standard type ▪ 4mm pin length ▪ AEC-Q200

□□□: Enter **Z4** for 3-pin type ▪ 4mm pin length
□□□: Enter **Z4X** for 3-pin type ▪ 4mm pin length ▪ AEC-Q200

□□□: Enter **Y4** for multi-pin type ▪ 4mm pin length
□□□: Enter **Y4X** for multi-pin type ▪ 4mm pin length ▪ AEC-Q200

DIMENSIONS ▪ All dimensions in mm

2-pin version ▪ Diameter ø D 20 mm to 25 mm ▪ Standard type

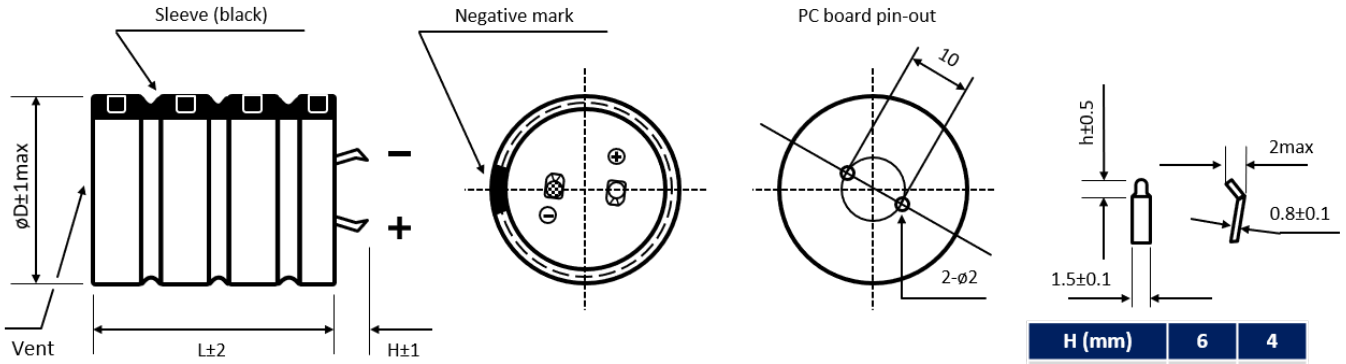

H (mm)	6	4
h (mm)	2.5	1.5

Standard: H = 6 ± 1mm. Also available H = 4 ± 1mm

For further information please contact sales@capxon.org

DIMENSIONS ▪ All dimensions in mm

3-pin version ▪ Polarity protection ▪ Diameter ø D 20 mm to 25 mm

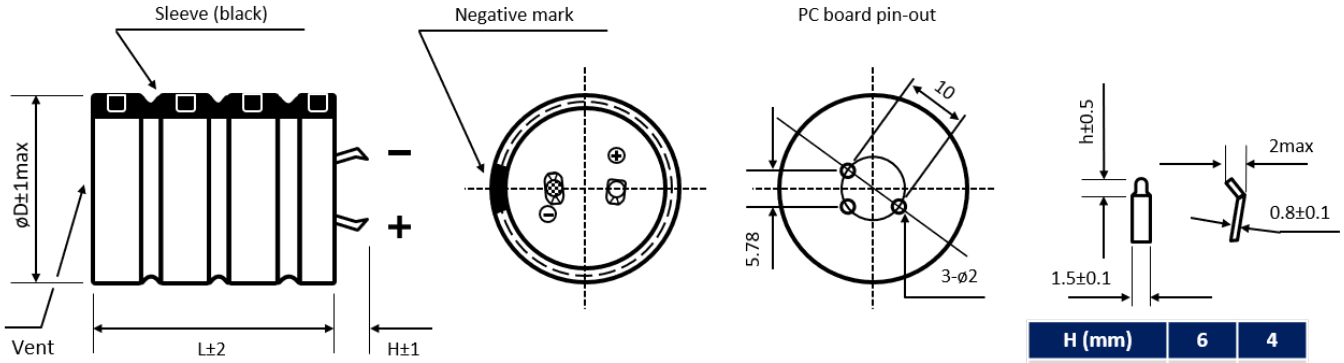

H (mm)	6	4
h (mm)	2.5	1.5

Standard: H = 6 ± 1mm. Also available H = 4 ± 1mm

Multipin version ▪ Diameter ø D ≥ 30 mm

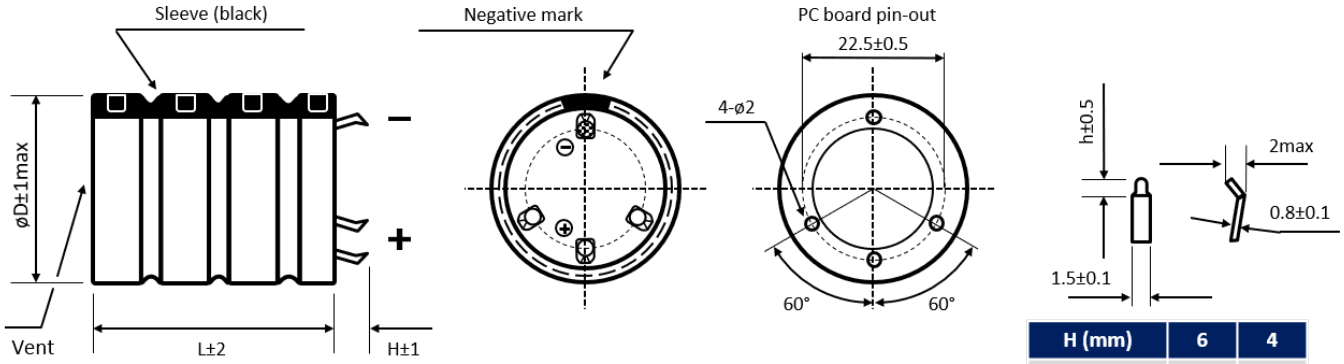

H (mm)	6	4
h (mm)	2.5	1.5

Standard: H = 6 ± 1mm. Also available H = 4 ± 1mm

Further possible terminal styles can be found in our packaging information liquid snap-in.

MULTIPLIER K_f for RIPPLE CURRENT vs. FREQUENCY

V_R (V) / Frequency (Hz)	50/60	100/120	300	1k	10k
$25 \le V_R \le 63$	0.56	0.7	0.83	0.92	1

PRECAUTIONS, GUIDELINES AND PACKAGING INFORMATON

Unless otherwise agreed in individual specifications, all products are subject to our “General Precautions and Guidelines” as well as our “Packaging Information”. Please refer to the following pages in the table.

General Precautions and Guidelines	Packaging Information Liquid Snap-In
Page 837	Page 579

For further information please contact sales@capxon.org

DISCLAIMER

All product related data (e.g. specification, statements and general information) are subject to change without any notice. It is necessary that the customer observes all product related technical / application information and handling instructions.

CapXon products are designed and manufactured according to severe quality and safety standards. Under no circumstance, CapXon warrants that any CapXon product is suitable for the purposes intended for your application, even CapXon knows the application. It is customer's duty and obligation to check and make sure that CapXon products are suitable for the purposes intended and select the correct and proper CapXon product. Customers are requested to perform a sufficient validation and reliability evaluation to assure needed safety level and reliability performance by suitable designs and to apply proper safeguards (e.g. redundancies, protective circuits).

Particular operating conditions (ambient temperature, ripple current, voltage, thermal resistance, etc.) as well as storage, production or assembly may affect the performance and the lifetime of the capacitor. Please consult CapXon for lifetime estimation, failure mode considerations or worst-case scenarios according to the product technology, product tolerances / deviations or change of the characteristics of the capacitor due to shipment, storage, handling, production and usage.

For aerospace or military application, life-saving, life-sustaining, safety critical applications or any application where failure may cause severe personal injury or death, please consult us before design-in the capacitor in your application.

Except for the written expressed warranties, CapXon does not impliedly, by assumption or whatever else, warrant, undertake, promise any other warranty or guaranty for any CapXon product.

For further information, please visit our website www.capxongroup.com or contact CapXon directly.

HH SERIES ▪ HIGH VOLTAGE, AUTOMOTIVE 125°C TYPE



KEY FEATURES

AEC-Q 200 · HIGH TEMPERATURE · HIGH VOLTAGE

- **HIGH TEMPERATURE** ▪ Snap-In type
- Useful life: 125°C ▪ 4 000 hours
- High reliability and high voltage applications
- Extremely stable dissipation factor and leakage current
- AEC-Q200 version available

HF Halogen Free · RoHS & REACH COMPLIANT

SPECIFICATIONS

Items		Performance Characteristics
Operating Temperature Range		-40 ~ +125°C
Rated Voltage Range	V_R	400 ~ 450V DC
Surge Voltage	V_S	$V_S = 1.10 \cdot V_R$
Capacitance Range	C_R	47 ~ 560µF
Cap. Tolerance	ΔC	±20% (120Hz ▪ 20°C)
Leakage Current (20°C ▪ V_R applied)	I_{LEAK}	≤ $0.02 \cdot C_R \cdot V_R$ ▪ After 5 minutes [I_{LEAK} (µA) ; C_R (µF) ; V_R (V)]
Dissipation Factor % (20°C ▪ 120Hz)	tanδ	Not to exceed the values shown in standard ratings
Self-Resistance (20°C ▪ 120Hz)	ESR	Not to exceed the values shown in standard ratings

Low Temperature Characteristics at 120Hz	Z ratio max.	V_R (V DC)	400	450
		Z-25°C/Z+20°C	6	6
		Z-40°C/Z+20°C	10	10

Lifetime Test		
Useful Life 125°C (V_R & I_R applied)	Test	**4 000 hours**
	△C/C_R	≤ ±30% of initial measured value
	tanδ	≤ 300% of initial specified value
	I_{Leak}	≤ the initial specified value
	Deviation Rate @ Useful Life: 10 000 FIT = 1%/1000h with 60% confidence level ▪ parts show higher drift as test criteria	
Endurance 125°C (V_R & I_R applied)	Test	**3 000 hours**
	△C/C_R	≤ ±20% of initial measured value
	tanδ	≤ 200% of initial specified value
	I_{Leak}	≤ the initial specified value
Shelf Life 125°C (V_R = 0)	Test	**1 000 hours**
	△C/C_R	≤ ±20% of initial measured value
	tanδ	≤ 200% of initial specified value
	I_{Leak}	≤ the initial specified value
	Before measurement: Restore capacitor to 20°C, apply V_R for 30 min according JIS-C-5101-4	
Vibration Resistance Test	Max. 10g force, f_{RANGE} 10Hz … 55Hz, amplitude 0.75mm; X/Y/Z-axis each 2h; capacitor rigidly clamped by body to surface ▪ IEC 60068-2-6	

For further information please contact sales@capxon.org

STANDARD RATINGS

V_R (V)	C_R (µF)	ø D (mm)	L (mm)	I_{LEAK} (µA, 5min)	tanδ +20°C ▪ 120Hz (%)	Max. ESR +20°C ▪ 120Hz (mΩ)	I_R ▪ Max. Ripple Current +125°C ▪ 120Hz (mA rms)	CapXon Part Number
400	47	22	25	376	20	4230	260	HH470M400M250A□□□
	68	22	30	544	20	2930	340	HH680M400M300A□□□
	82	22	30	656	20	2430	380	HH820M400M300A□□□
	100	22	35	800	20	1990	430	HH101M400M350A□□□
	120	22	35	960	20	1660	500	HH121M400M350A□□□
	150	22	40	1200	20	1330	550	HH151M400M400A□□□
	180	22	45	1440	20	1110	640	HH181M400M450A□□□
	220	25	45	1760	20	900	780	HH221M400N450A□□□
	270	25	50	2160	20	740	920	HH271M400N500A□□□
	330	30	45	2640	20	600	1020	HH331M400O450A□□□
	390	30	50	3120	20	510	1160	HH391M400O500A□□□
	470	35	45	3760	20	420	1340	HH471M400P450A□□□
	560	35	50	4480	20	360	1560	HH561M400P500A□□□
450	68	22	30	612	20	2930	380	HH680M450M300A□□□
	82	22	35	738	20	2430	440	HH820M450M350A□□□
	100	22	40	900	20	1990	460	HH101M450M400A□□□
	120	22	45	1080	20	1660	540	HH121M450M450A□□□
	150	22	50	1350	20	1330	620	HH151M450M500A□□□
	180	22	55	1620	20	1110	730	HH181M450M550A□□□
	220	25	50	1980	20	900	870	HH221M450N500A□□□
	270	30	45	2430	20	740	1120	HH271M450O450A□□□
	330	30	50	2970	20	600	1300	HH331M450O500A□□□
	390	35	45	3510	20	510	1480	HH391M450P450A□□□
	470	35	50	4230	20	420	1670	HH471M450P500A□□□

□□□: Enter **P6** for standard type ▪ 6mm pin length
□□□: Enter **P6X** for standard type ▪ 6mm pin length ▪ AEC-Q200

□□□: Enter **Z6** for 3-pin type ▪ 6mm pin length
□□□: Enter **Z6X** for 3-pin type ▪ 6mm pin length ▪ AEC-Q200

□□□: Enter **Y6** for multi-pin type ▪ 6mm pin length
□□□: Enter **Y6X** for multi-pin type ▪ 6mm pin length ▪ AEC-Q200

□□□: Enter **P4** for standard type ▪ 4mm pin length
□□□: Enter **P4X** for standard type ▪ 4mm pin length ▪ AEC-Q200

□□□: Enter **Z4** for 3-pin type ▪ 4mm pin length
□□□: Enter **Z4X** for 3-pin type ▪ 4mm pin length ▪ AEC-Q200

□□□: Enter **Y4** for multi-pin type ▪ 4mm pin length
□□□: Enter **Y4X** for multi-pin type ▪ 4mm pin length ▪ AEC-Q200

DIMENSIONS ▪ All dimensions in mm

2-pin version ▪ Diameter ø D 20 mm to 25 mm ▪ Standard type

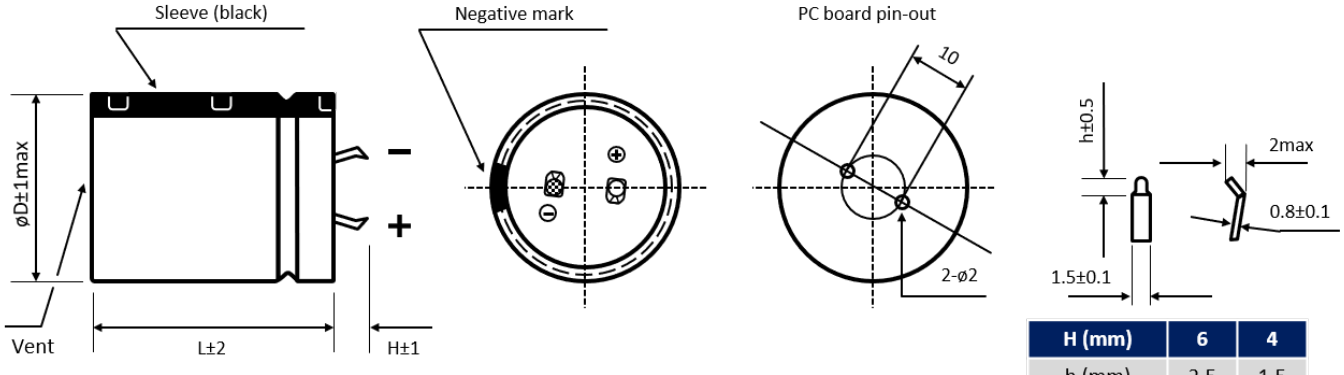

H (mm)	6	4
h (mm)	2.5	1.5

Standard: H = 6 ± 1mm. Also available H = 4 ± 1mm

For further information please contact sales@capxon.org

DIMENSIONS ▪ All dimensions in mm

3-pin version ▪ Polarity protection ▪ Diameter ø D 20 mm to 25 mm

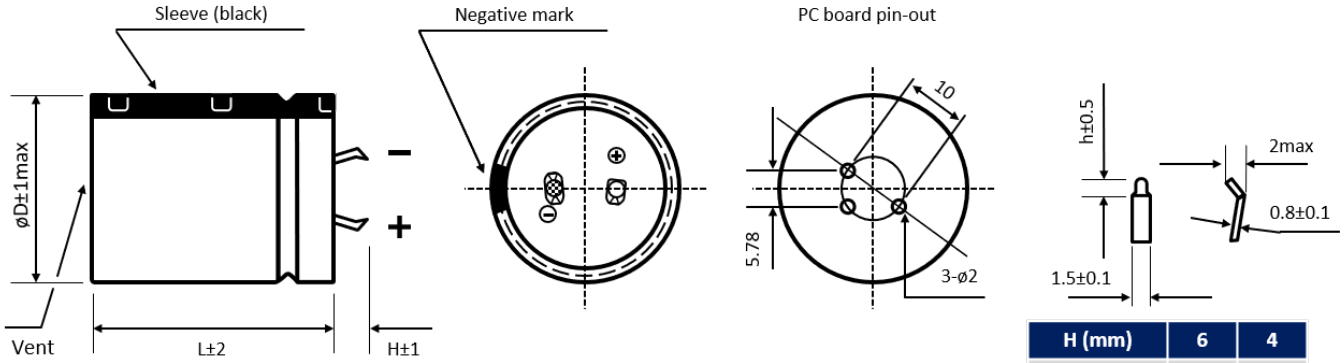

H (mm)	6	4
h (mm)	2.5	1.5

Standard: H = 6 ± 1mm. Also available H = 4 ± 1mm

Multipin version ▪ Diameter ø D ≥ 30 mm

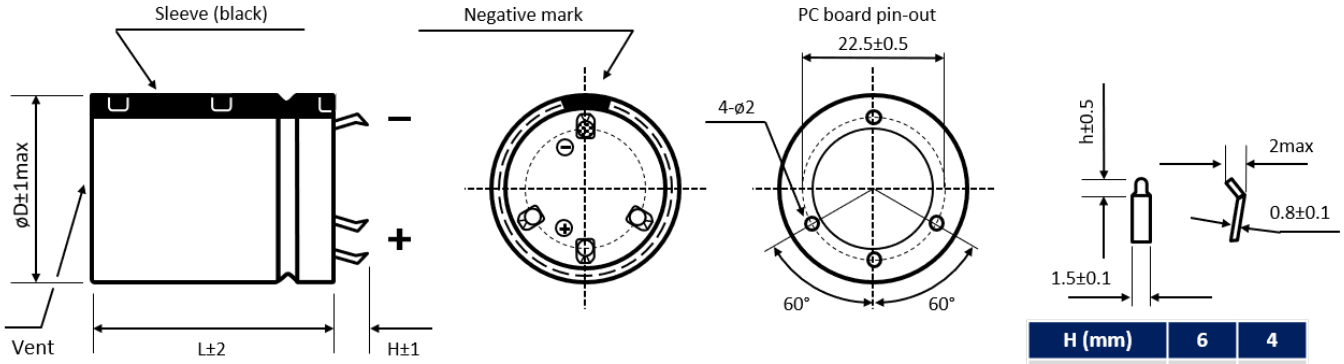

H (mm)	6	4
h (mm)	2.5	1.5

Standard: H = 6 ± 1mm. Also available H = 4 ± 1mm

Further possible terminal styles can be found in our packaging information liquid snap-in.

MULTIPLIER K_f for RIPPLE CURRENT vs. FREQUENCY

V_R (V) / Frequency (Hz)	50/60	100/120	300	1k	10k	50k
400 ≤ V_R ≤ 450	0.77	1	1.16	1.3	1.41	1.43

PRECAUTIONS, GUIDELINES AND PACKAGING INFORMATON

Unless otherwise agreed in individual specifications, all products are subject to our “General Precautions and Guidelines” as well as our “Packaging Information”. Please refer to the following pages in the table.

General Precautions and Guidelines	Packaging Information Liquid Snap-In
Page 837	Page 579

For further information please contact sales@capxon.org

DISCLAIMER

All product related data (e.g. specification, statements and general information) are subject to change without any notice. It is necessary that the customer observes all product related technical / application information and handling instructions.

CapXon products are designed and manufactured according to severe quality and safety standards. Under no circumstance, CapXon warrants that any CapXon product is suitable for the purposes intended for your application, even CapXon knows the application. It is customer's duty and obligation to check and make sure that CapXon products are suitable for the purposes intended and select the correct and proper CapXon product. Customers are requested to perform a sufficient validation and reliability evaluation to assure needed safety level and reliability performance by suitable designs and to apply proper safeguards (e.g. redundancies, protective circuits).

Particular operating conditions (ambient temperature, ripple current, voltage, thermal resistance, etc.) as well as storage, production or assembly may affect the performance and the lifetime of the capacitor. Please consult CapXon for lifetime estimation, failure mode considerations or worst-case scenarios according to the product technology, product tolerances / deviations or change of the characteristics of the capacitor due to shipment, storage, handling, production and usage.

For aerospace or military application, life-saving, life-sustaining, safety critical applications or any application where failure may cause severe personal injury or death, please consult us before design-in the capacitor in your application.

Except for the written expressed warranties, CapXon does not impliedly, by assumption or whatever else, warrant, undertake, promise any other warranty or guaranty for any CapXon product.

For further information, please visit our website www.capxongroup.com or contact CapXon directly.

PRODUCT CODE ▪ SNAP-IN ALUMINUM ELECTROLYTIC CAPACITORS

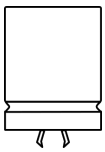

Snap-in type example:
UJ series ▪ 470µF ▪ 450V ▪ ±20% ▪ Ø 30mm ▪ L 45mm ▪ 2-pin ▪ 6mm pin length

1	2	3	4	5	6	7	8	9	10	11	12	13	14	15	16	17	18	19	20
U	J	4	7	1	M	4	5	0	O	4	5	0	A	P	6	-	-	-	-
Series		Capacitance			Capacitance tolerance	Voltage			Case Ø (mm)	Height (mm)			Type code	Terminals		Special requirement			

Code	µF
100	10
220	22
101	100
561	560
102	1000
472	4700
103	10000
683	68000
104	100000

Code	%
H	±5
K	±10
S	±15
M	±20
N	±30
D	±40
I	+5 to +20
B	0 to -20
G	0 to +10
Z	0 to +20
Y	0 to +30
X	0 to +40
A	0 to +50
J	-5 to +20
C	-5 to +30
E	-8 to +5
V	-10 to +20
Q	-10 to +30
T	-10 to +50
W	-20 to +10
P	-15 to +20
L	-25 to +20
U	-30 to 0
F	-35 to 0
O	-50 to 0

Code	Volt
6R3	6.3
010	10
016	16
025	25
035	35
050	50
063	63
080	80
100	100
160	160
180	180
200	200
220	220
250	250
315	315
350	350
385	385
400	400
420	420
450	450
500	500
550	550
575	575
600	600
630	630

Code	ØD
L	20
M	22
N	25
O	30
P	35
Q	40
U	42
V	45

Code	H
150	15
200	20
250	25
300	30
350	35
400	40
450	45
500	50
550	55
600	60
650	65
700	70
750	75
800	80
850	85
900	90
950	95
A00	100
A05	105

Code	Type
A	Without lead treatment
E	With lead treatment

See chapter terminals or lead treatment

Code	Special
X	AEC-Q200

See datasheet for reference

Please consult CapXon for further assistance

MARKING ▪ SNAP-IN ALUMINUM ELECTROLYTIC CAPACITORS

Aluminum Electrolytic Capacitor ▪ Snap-In type

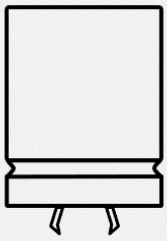

CapXon:	Manufacturer trademark
470µF:	Nominal capacitance
450V:	Rated voltage
	(-) polarity (Cathode indicate)
UJ:	Series
VENT:	Safety vent
105°C:	Maximum operating temperature
X:	AEC-Q200
191213:	Production datecode year/month/day (ex. 2019/December/13th)

Side view

Top view

Standard type	AEC-Q200 type
CapXon 470uF - 450V UJ VENT 105°C - NEG	CapXon 470uF - 450V UJ VENT-X 105°C - NEG
191213	191213

PACKAGING ▪ SNAP-IN ALUMINUM ELECTROLYTIC CAPACITORS

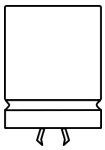

Ø D (mm)	Length L (mm)	Terminal length H (mm)	Inner box quantity (pcs)	Inner box size L x W x H (mm)	Outer box quantity (pcs)	Outer box size L x W x H (mm)	Country of origin	Tariff number
20	≤ 25		120	268 x 265 x 38	720	560 x 280 x 135	China	85322200
	27 to 35	< 6 (L=35)	120	268 x 265 x 48	720	560 x 275 x 167	China	85322200
	35	≥ 6	120	268 x 265 x 64	720	560 x 275 x 208	China	85322200
	40 to 51		120	268 x 265 x 64	720	560 x 275 x 208	China	85322200
22	≤ 25		100	268 x 265 x 38	600	560 x 280 x 135	China	85322200
	27 to 35	< 6 (L=35)	100	268 x 265 x 48	600	560 x 275 x 167	China	85322200
	35	≥ 6	100	268 x 265 x 64	600	560 x 275 x 208	China	85322200
	40 to 51		100	268 x 265 x 64	600	560 x 275 x 208	China	85322200
	52 to 61		100	268 x 265 x 72	400	560 x 275 x 167	China	85322200
	62 to 75		100	268 x 265 x 90	400	560 x 275 x 208	China	85322200
25	≤ 25		100	295 x 293 x 38	500	310 x 308 x 211	China	85322200
	26 to 35	< 6 (L=35)	100	295 x 293 x 48	500	315 x 313 x 258	China	85322200
	35	≥ 6	100	295 x 293 x 64	500	310 x 308 x 340	China	85322200
	40 to 51		100	295 x 293 x 64	500	310 x 308 x 340	China	85322200
	52 to 60		100	295 x 293 x 72	500	310 x 308 x 383	China	85322200
	61 to 75		100	295 x 293 x 90	400	310 x 308 x 383	China	85322200
30	≤ 25		50	173 x 344 x 38	400	375 x 361 x 175	China	85322200
	26 to 35	< 6 (L=35)	50	173 x 344 x 48	400	375 x 361 x 220	China	85322200
	35	≥ 6	50	173 x 344 x 64	300	375 x 361 x 200	China	85322200
	40 to 51		50	173 x 344 x 64	300	375 x 361 x 220	China	85322200
	52 to 65		50	182 x 350 x 80	300	375 x 361 x 260	China	85322200
	70 to 85		50	182 x 350 x 100	200	375 x 361 x 220	China	85322200
35	≤ 25		50	195 x 392 x 38	400	405 x 407 x 175	China	85322200
	26 to 35	< 6 (L=35)	50	195 x 392 x 48	300	405 x 407 x 164	China	85322200
	35	≥ 6	50	195 x 392 x 64	300	405 x 407 x 212	China	85322200
	36 to 44		50	195 x 392 x 64	300	405 x 407 x 212	China	85322200
	45 to 52		50	195 x 392 x 64	200	410 x 210 x 280	China	85322200
	56 to 65		50	195 x 392 x 80	200	405 x 407 x 175	China	85322200
	66 to 75		50	195 x 392 x 90	200	405 x 407 x 212	China	85322200
	80 to 85		50	195 x 392 x 100	200	405 x 407 x 220	China	85322200
	90 to 100		50	195 x 392 x 115	100	405 x 407 x 130	China	85322200
40	26 to 35	< 6 (L=35)	40	375 x 230 x 48	200	390 x 250 x 265	China	85322200
	35	≥ 6	40	375 x 230 x 64	160	390 x 250 x 280	China	85322200
	36 to 46		40	375 x 230 x 64	160	390 x 250 x 280	China	85322200
	47 to 62		40	375 x 230 x 80	120	390 x 250 x 265	China	85322200
	63 to 75		40	375 x 230 x 90	120	390 x 250 x 295	China	85322200
	80 to 105		40	375 x 230 x 120	80	390 x 250 x 265	China	85322200
45	35 to 50		35	360 x 260 x 64	140	550 x 380 x 150	China	85322200
	55 to 65		35	360 x 260 x 80	140	550 x 380 x 180	China	85322200
	70 to 80		35	360 x 260 x 95	70	550 x 380 x 115	China	85322200
	85 to 100		35	360 x 260 x 115	70	550 x 380 x 130	China	85322200
50	50 to 60		30	370 x 310 x 75	120	770 x 330 x 170	China	85322200
	65 to 75		30	370 x 310 x 90	60	770 x 330 x 110	China	85322200
	80 to 100		30	370 x 310 x 115	60	770 x 330 x 130	China	85322200

For further information please contact sales@capxon.org

AVAILABLE TERMINALS ▪ SNAP-IN ALUMINUM ELECTROLYTIC CAPACITORS

Snap-In type ▪ PP version ▪ 2-pin ▪ standard type ▪ ØD = 20 to 45mm

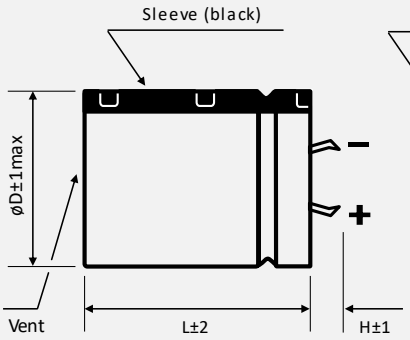

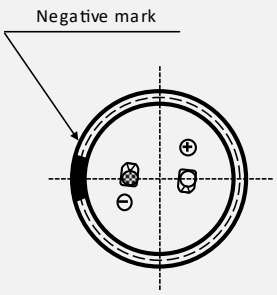

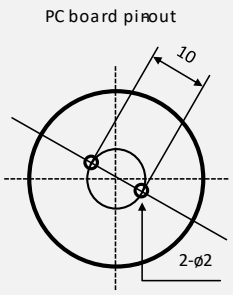

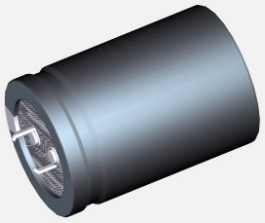

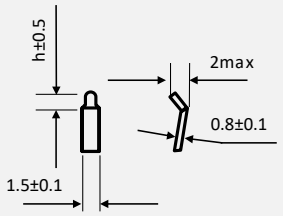

Standard: H = 6 mm. Also available H = 4 mm

H (mm)	6	4
h (mm)	2.5	1.5
Type / Terminal code	A P6	A P4

Example

U J	4 7 1	M	4 5 0	O	4 5 0	A	P 6	- -
Series	Capacitance	Tolerance	Voltage	ØD (mm)	Height (mm)	Type code	Terminals	Special requirement

Snap-In type ▪ ZP version ▪ 3-pin ▪ polarity protection ▪ ØD = 20 to 45mm

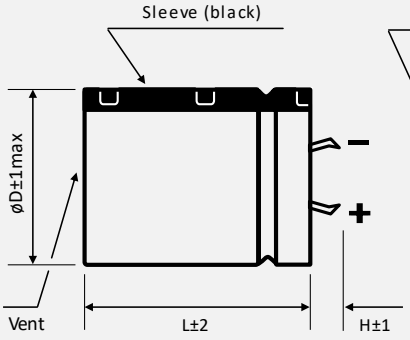

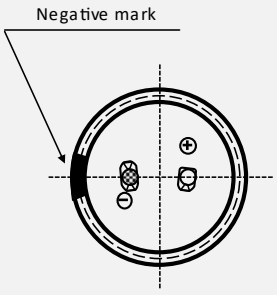

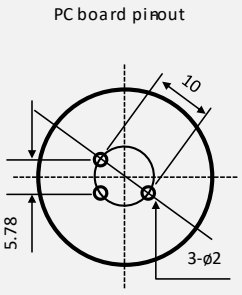



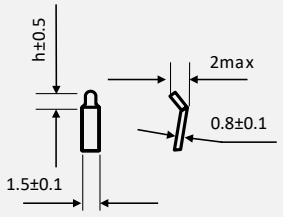

Standard: H = 4 mm. Also available H = 6 mm

H (mm)	6	4
h (mm)	2.5	1.5
Type / Terminal code	A Z6	A Z4

Example

U J	4 7 1	M	4 5 0	O	4 5 0	A	Z 4	- -
Series	Capacitance	Tolerance	Voltage	ØD (mm)	Height (mm)	Type code	Terminals	Special requirement

For further information please contact sales@capxon.org

AVAILABLE TERMINALS ▪ SNAP-IN ALUMINUM ELECTROLYTIC CAPACITORS

Snap-In type ▪ YP version ▪ Multi-pin ▪ polarity protection ▪ ØD = 30 to 45mm

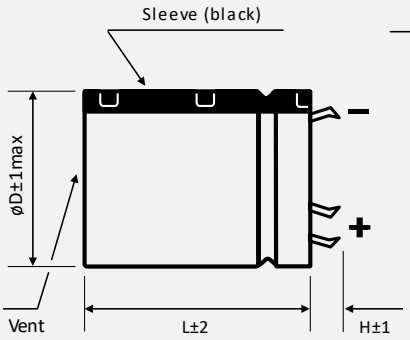

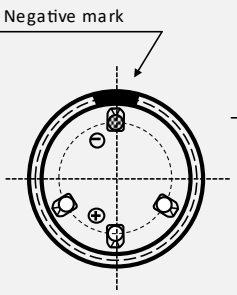

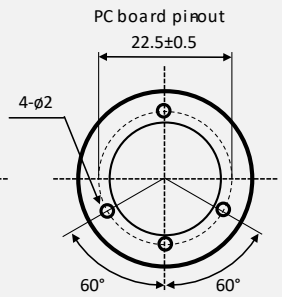



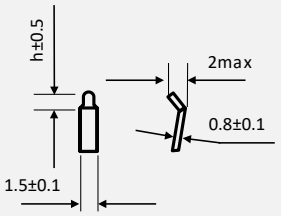

Standard: H = 6 mm. Also available H = 4 mm

H (mm)	6	4
h (mm)	2.5	1.5
Type / Terminal code	A Y6	A Y4

Example

U J	4 7 1	M	4 5 0	O	4 5 0	A	Y 6	- -
Series	Capacitance	Tolerance	Voltage	ØD (mm)	Height (mm)	Type code	Terminals	Special requirement

Snap-In type ▪ LP version ▪ slim terminal ▪ ØD = 20 to 45mm

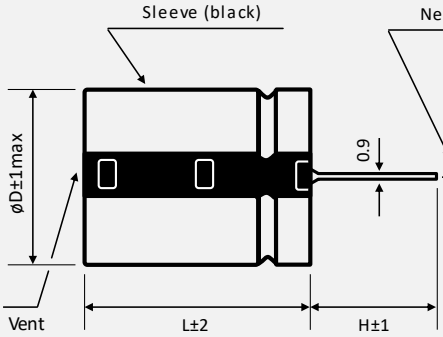

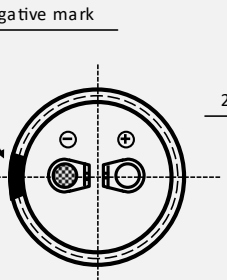

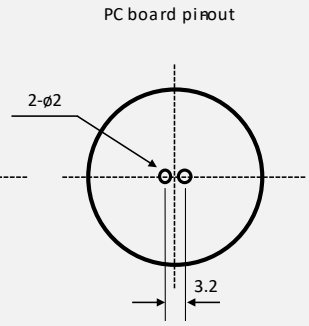



Standard: H = 9.5 mm. Also available H = 4 mm

H (mm)	9.5	4
Type / Terminal code	A L9	A L4

Example

U J	4 7 1	M	4 5 0	O	4 5 0	A	L 9	- -
Series	Capacitance	Tolerance	Voltage	ØD (mm)	Height (mm)	Type code	Terminals	Special requirement

AVAILABLE TERMINALS ▪ SNAP-IN ALUMINUM ELECTROLYTIC CAPACITORS

Snap-In type ▪ CP version ▪ lug type ▪ T type ▪ ØD = 30 to 45mm

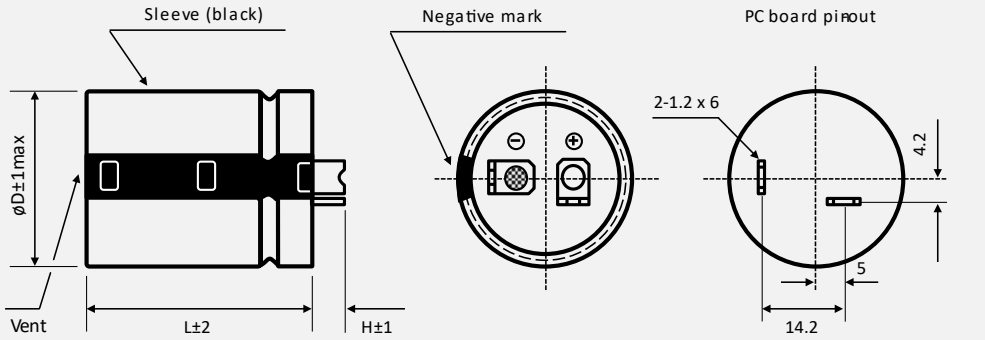



Standard: H = 4.5 mm. Also available H = 5.5 mm

H (mm)	5.5	4.5
Type / Terminal code	A C5	A C4

Example

U J	4 7 1	M	4 5 0	O	4 5 0	A	C 4	- -
Series	Capacitance	Tolerance	Voltage	ØD (mm)	Height (mm)	Type code	Terminals	Special requirement

Snap-In type ▪ HP version ▪ lug type ▪ U type ▪ ØD = 30 to 45mm

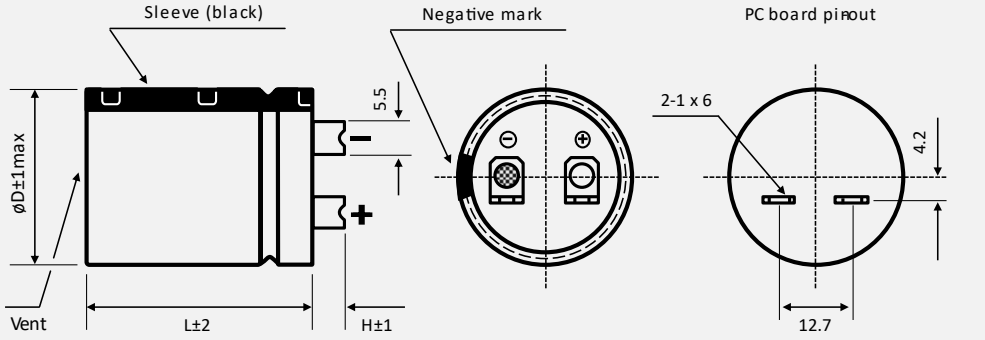



Standard: H = 6 mm

H (mm)	6
Type / Terminal code	A H6

Example

U J	4 7 1	M	4 5 0	O	4 5 0	A	H 6	- -
Series	Capacitance	Tolerance	Voltage	ØD (mm)	Height (mm)	Type code	Terminals	Special requirement

AVAILABLE TERMINALS ▪ SNAP-IN ALUMINUM ELECTROLYTIC CAPACITORS

Snap-In type ▪ TP version ▪ long terminal ▪ cathode right side ▪ ØD = 20 to 45mm

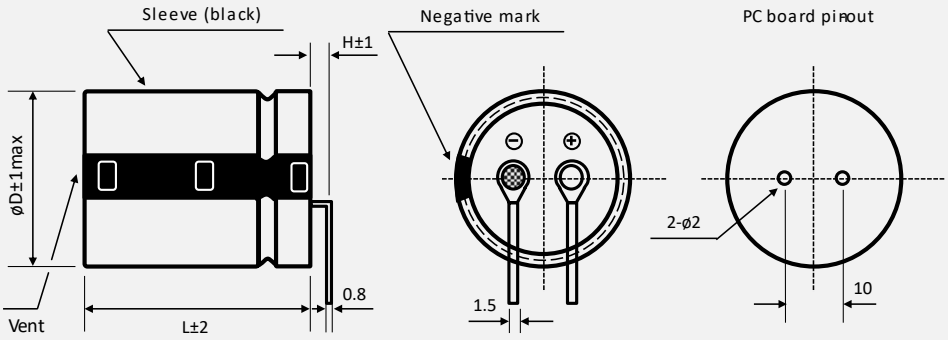



Standard: H = 2.5 mm

H (mm)	2.5
Type / Terminal code	E CR

Example

U J	4 7 1	M	4 5 0	O	4 5 0	E	C R	- -
Series	Capacitance	Tolerance	Voltage	ØD (mm)	Height (mm)	Type code	Terminals	Special requirement

Snap-In type ▪ TP version ▪ long terminal ▪ cathode left side ▪ ØD = 20 to 45mm

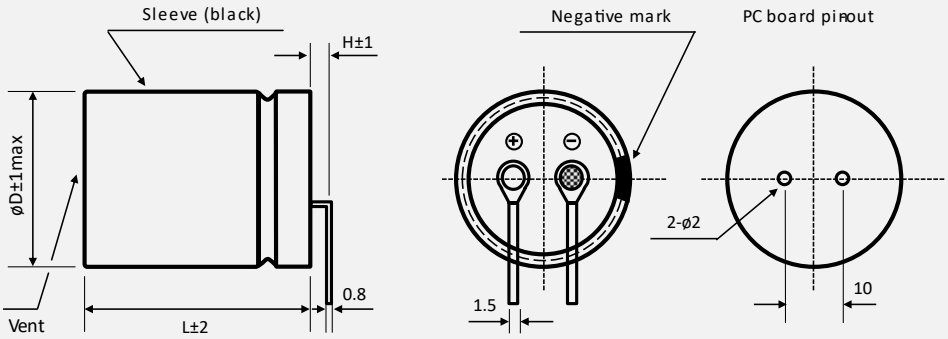



Standard: H = 2.5 mm

H (mm)	2.5
Type / Terminal code	E CL

Example

U J	4 7 1	M	4 5 0	O	4 5 0	E	C L	- -
Series	Capacitance	Tolerance	Voltage	ØD (mm)	Height (mm)	Type code	Terminals	Special requirement

AVAILABLE TERMINALS ▪ SNAP-IN ALUMINUM ELECTROLYTIC CAPACITORS

Snap-In type ▪ VP version ▪ lug type ▪ ØD = 20 to 45mm

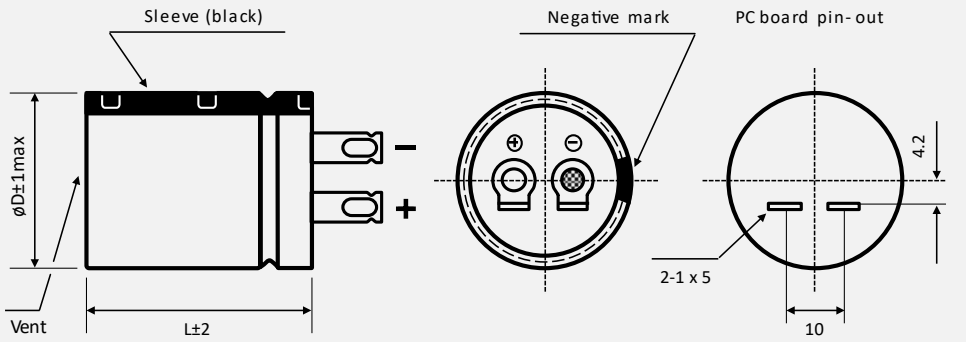



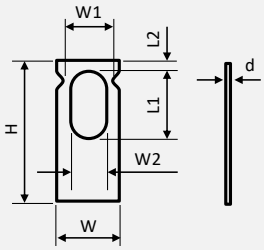

Standard: H = 8 mm.

H (mm)	8
Type / Terminal code	A V8

Consult CapXon for further lug heights.
If terminals of other legths are needed, the corresponding size parameters are also different

Example

U J	4 7 1	M	4 5 0	O	4 5 0	A	V 8	- -
Series	Capacitance	Tolerance	Voltage	ØD (mm)	Height (mm)	Type code	Terminals	Special requirement

H ± 0.5	ØD	L1 ± 0.1	L2 ± 0.2	W ± 0.2	W1 ± 0.2	W2 ± 0.2	d ± 0.1
8	25	3.5	1	4.6	3.7	2	0.8
	30	3.5	1	4.6	3.7	2	0.8
	35	3.5	1	4.6	3.7	2	0.8
	40	3.5	1	4.6	3.7	2	0.8
	45	3.5	1	4.6	3.7	2	0.8

For further information please contact sales@capxon.org

VIBRATION SPECIFICATION ▪ STANDARD AND VIBRATION PROOF DESIGN

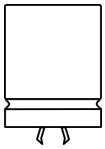

Package	Test Standard	Condition	Determinant Standard
Standard design all pin-styles	IEC 60384-1 IEC 60384-4 IEC 60068-2-6 MIL-STD 202 Method 204	1. Frequency range: 10Hz ~ 55Hz 2. Amplitude (single peak): 0.75 mm 3. Acceleration: 100m/s^2 (10g at 10 ~ 55Hz) 4. X, Y, Z directions, 2 hours per direction, total 6 hours	1. ΔC/C ≤ ±5% of initial value 2. DF ≤ stated limit 3. LC ≤ stated limit 4. No visible damage 5. No leakage of electrolyte
Vibration-proof design		1. Consult CapXon for test details	1. Consult CapXon for test details

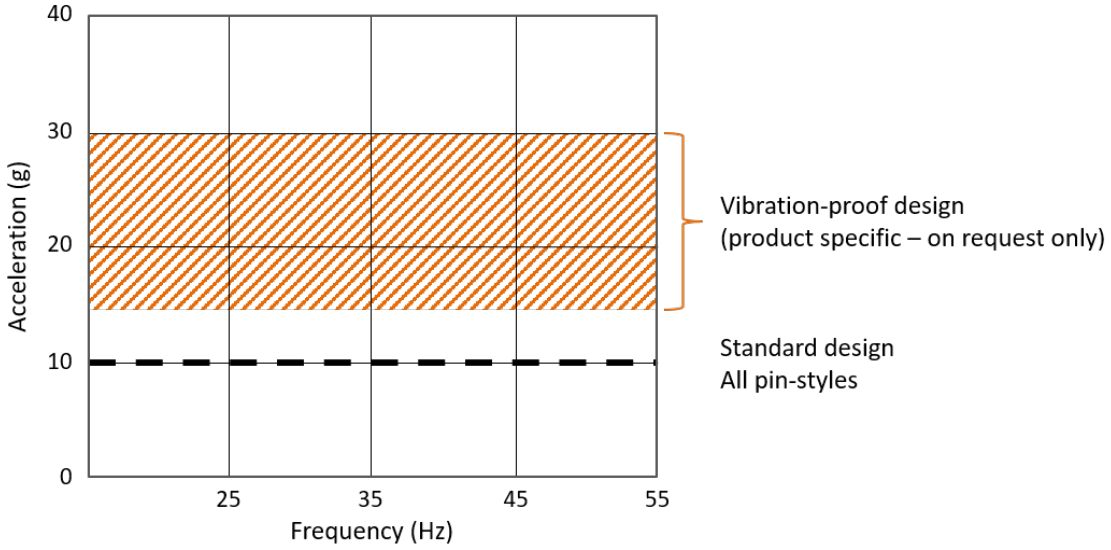

For further information please contact sales@capxon.org

Aluminum Electrolytic Capacitors

Screw Types



OVERVIEW ▪ SCREW TERMINAL ALUMINUM ELECTROLYTIC CAPACITORS

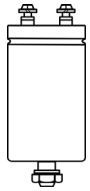

Features



Series	Page	High Ripple Current	Long Life	Standard	Ultra Long Life	With Stud	Temperature Range (°C)		Voltage Range (V)		Capacitance Range (µF)		Endurance (hours)	Useful Life (hours)
RS	589				●	●	-40	+85	10	100	1800	10mF	2000	12000
RG	601			●		●	-40	+85	160	450	390	39000	2000	6000
							-25		500	630	1000	10000		
RP	609		●			●	-40	+85	160	450	270	68000	2000	10000
							-25		500	630	100	10000		
RX	623				●	●	-40	+85	160	450	220	1mF	5000	20000
							-25		500	630	10000	15000		
RU	637	●			●	●	-40	+85	160	450	1000	33000	2000	12000
							-25		500		820	10000		
RK	644			●		●	-40	+105	10	100	1000	10mF	2000	4000
RM	654		●			●	-40	+105	160	450	180	68000	2000	6000
							-25		500		330	10000		
RH	664	●	●			●	-40	+105	160	450	220	47000	2000	8000
RL	671		●		●	●	-40	+105	160	450	220	22000	5000	10000

For further information please contact sales@capxon.org

RS SERIES ▪ LONG LIFE 85°C TYPE



KEY FEATURES

LONG LIFE

- **ALUMINUM ELECTROLYTIC CAPACITOR** ▪ Screw terminal type
- Useful life: 85°C ▪ 12 000 hours
- Wide capacitance range
- All-welded construction ensures highest reliability
- Bottom cooling possible due to the thermal construction

SPECIFICATIONS

Items		Performance Characteristics	
Operating Temperature Range		-40 ~ +85°C	
Rated Voltage Range	V_R	10 ~ 100V DC	
Surge Voltage	V_S	$V_S = 1.15 \cdot V_R$	
Capacitance Range	C_R	1800 ~ 1000000µF	
Cap. Tolerance	ΔC	±20% (120Hz ▪ 20°C)	
Leakage Current (20°C ▪ V_R applied)	I_{LEAK}	≤ $0.018 \cdot (C_R \cdot V_R)^{0.85} + 4$ (µA) or 5mA (whichever is smaller) ▪ After 5 minutes [I_{LEAK} (µA) ; C_R (µF) ; V_R (V)]	
Dissipation Factor % (20°C ▪ 120Hz)	tanδ	Not to exceed the values shown in standard ratings	
Low Temperature Characteristics at 120Hz	Z ratio max.	V_R (V DC)	10 ~ 100
		Z-25°C/Z+20°C	3
		Z-40°C/Z+20°C	12

Lifetime Test		
Useful Life 85°C (V_R & I_R applied)	Test	**12 000 hours**
	△C/C_R	≤ ±45% of initial measured value
	tanδ	≤ 300% of initial specified value
	I_{Leak}	≤ the initial specified value
	Deviation Rate @ Useful Life: 10 000 FIT = 1%/1000h with 60% confidence level ▪ parts show higher drift as test criteria	
Endurance 85°C (V_R & I_R applied)	Test	**2 000 hours**
	△C/C_R	≤ ±20% of initial measured value
	tanδ	≤ 200% of initial specified value
	I_{Leak}	≤ the initial specified value
Shelf Life 85°C (V_R = 0)	Test	**1 000 hours**
	△C/C_R	≤ ±20% of initial measured value
	tanδ	≤ 200% of initial specified value
	I_{Leak}	≤ the initial specified value
	Before measurement: Restore capacitor to 20°C, apply V_R for 30 min according JIS-C-5101-4	
Vibration Resistance Test	Max. 10g force, f_{RANGE} 10Hz … 55Hz, amplitude 0.75mm; X/Y/Z-axis each 2h; capacitor rigidly clamped by body to surface ▪ IEC 60068-2-6	

For further information please contact sales@capxon.org

STANDARD RATINGS

□□□ see terminal code at dimensions table

V_R (V)	C_R (µF)	ø D (mm)	L (mm)	tanδ % (+20°C) (120Hz)	Typ. ESR +20°C ▪ 120Hz (mΩ)	Max. ESR +20°C ▪ 120Hz (mΩ)	I_R ▪ Max. Ripple Current +85°C ▪ 120Hz (mA rms)	CapXon Part Number
10	33000	35	50	75	15	28	4500	RS333M010P500□□□
	39000	35	50	75	13	24	4750	RS393M010P500□□□
	47000	35	65	75	11	21	5400	RS473M010P650□□□
	56000	35	65	75	10	18	6000	RS563M010P650□□□
	68000	35	80	75	9	15	7600	RS683M010P800□□□
	82000	35	80	75	8	12	7700	RS823M010P800□□□
	100000	35	100	75	7	10	9300	RS104M010PA00□□□
	120000	35	120	75	6	10	9500	RS124M010PA20□□□
	150000	51	80	100	5	9	10100	RS154M010R800□□□
	180000	51	80	100	5	9	10800	RS184M010R800□□□
	220000	51	100	100	5	9	13000	RS224M010RA00□□□
	270000	51	120	100	4	8	14000	RS274M010RA20□□□
	330000	63.5	96	120	4	7	15600	RS334M010S960□□□
	390000	63.5	100	120	4	7	16200	RS394M010SA00□□□
	470000	63.5	120	120	3	6	18100	RS474M010SA20□□□
	560000	76.2	100	150	3	6	18400	RS564M010TA00□□□
	680000	76.2	120	150	3	6	19000	RS684M010TA20□□□
	820000	76.2	155	150	3	6	24000	RS824M010TA55□□□
16	22000	35	50	60	14	25	5000	RS223M016P500□□□
	27000	35	50	60	12	22	6300	RS273M016P500□□□
	33000	35	60	60	11	19	8500	RS333M016P600□□□
	33000	35	80	60	11	19	9500	RS333M016P800□□□
	47000	35	100	60	8	15	10000	RS473M016PA00□□□
	47000	35	80	60	8	15	9000	RS473M016P800□□□
	56000	35	80	60	7	13	9800	RS563M016P800□□□
	68000	35	100	60	7	13	10500	RS683M016PA00□□□
	68000	35	105	60	7	13	10800	RS683M016PA05□□□
	68000	51	80	70	7	13	12000	RS683M016R800□□□
	82000	35	100	60	6	11	12000	RS823M016PA00□□□
	100000	35	120	60	5	10	12500	RS104M016PA20□□□
	100000	51	100	70	5	10	14000	RS104M016RA00□□□
	100000	51	80	70	5	10	13000	RS104M016R800□□□
	120000	35	120	60	5	10	14200	RS124M016PA20□□□
	120000	51	80	70	5	10	14800	RS124M016R800□□□
	150000	51	100	70	5	9	16000	RS154M016RA00□□□
	150000	51	140	70	5	9	17200	RS154M016RA40□□□
	150000	51	80	70	5	9	15000	RS154M016R800□□□
	220000	51	120	70	4	8	14500	RS224M016RA20□□□
	220000	51	140	70	4	8	15600	RS224M016RA40□□□
	220000	63.5	105	80	4	8	17000	RS224M016SA05□□□
	220000	63.5	120	80	4	8	18000	RS224M016SA20□□□
	270000	63.5	100	80	4	7	18500	RS274M016SA00□□□
	270000	63.5	96	80	4	7	18200	RS274M016S960□□□
	330000	63.5	105	80	4	7	19000	RS334M016SA05□□□

For further information please contact sales@capxon.org

STANDARD RATINGS

□□□ see terminal code at dimensions table

V_R (V)	C_R (µF)	ø D (mm)	L (mm)	tanδ % (+20°C) (120Hz)	Typ. ESR +20°C ▪ 120Hz (mΩ)	Max. ESR +20°C ▪ 120Hz (mΩ)	I_R ▪ Max. Ripple Current +85°C ▪ 120Hz (mA rms)	CapXon Part Number
16	330000	63.5	120	80	4	7	20100	RS334M016SA20□□□
	330000	63.5	140	80	4	7	21500	RS334M016SA40□□□
	330000	76.2	120	120	4	7	22000	RS334M016TA20□□□
	390000	63.5	130	80	3	6	22500	RS394M016SA30□□□
	390000	76.2	100	120	3	6	22800	RS394M016TA00□□□
	390000	76.2	120	120	3	6	24700	RS394M016TA20□□□
	470000	76.2	115	120	3	6	25000	RS474M016TA15□□□
	470000	76.2	120	120	3	6	25500	RS474M016TA20□□□
	470000	76.2	140	120	3	6	27300	RS474M016TA40□□□
	560000	76.2	130	120	3	6	27600	RS564M016TA30□□□
	560000	76.2	140	120	3	6	28500	RS564M016TA40□□□
	680000	76.2	145	120	3	6	28700	RS684M016TA45□□□
	680000	76.2	160	120	3	6	30100	RS684M016TA60□□□
	820000	76.2	220	120	3	5	31000	RS824M016TB20□□□
	1000000	89	160	140	3	5	32000	RS105M016XA60□□□
	1000000	89	200	140	3	5	35300	RS105M016XB00□□□
25	15000	35	50	40	18	35	4000	RS153M025P500□□□
	18000	35	50	40	16	29	4500	RS183M025P500□□□
	22000	35	60	40	13	24	5500	RS223M025P600□□□
	27000	35	65	40	12	20	6900	RS273M025P650□□□
	33000	35	80	40	10	19	8200	RS333M025P800□□□
	39000	35	80	40	9	17	9000	RS393M025P800□□□
	47000	35	100	40	8	15	9500	RS473M025PA00□□□
	47000	35	105	40	8	15	9700	RS473M025PA05□□□
	47000	35	120	40	8	15	10300	RS473M025PA20□□□
	56000	35	100	40	7	13	10500	RS563M025PA00□□□
	56000	35	120	40	7	13	11400	RS563M025PA20□□□
	68000	35	120	40	6	11	12000	RS683M025PA20□□□
	68000	51	80	50	6	11	12300	RS683M025R800□□□
	82000	35	120	40	7	12	12500	RS823M025PA20□□□
	82000	51	80	50	7	12	12800	RS823M025R800□□□
	100000	51	100	50	5	10	13400	RS104M025RA00□□□
	100000	51	105	50	5	10	13700	RS104M025RA05□□□
	120000	51	115	50	5	9	14000	RS124M025RA15□□□
	120000	51	120	50	5	9	14300	RS124M025RA20□□□
	150000	51	120	50	4	8	15000	RS154M025RA20□□□
	150000	51	140	50	4	8	16100	RS154M025RA40□□□
	150000	63.5	105	70	4	8	16200	RS154M025SA05□□□
	180000	63.5	120	70	4	7	16800	RS184M025SA20□□□
	220000	63.5	105	70	4	7	17000	RS224M025SA05□□□
	220000	63.5	120	70	4	7	18000	RS224M025SA20□□□
	270000	63.5	130	70	3	6	18800	RS274M025SA30□□□
	270000	76.2	100	80	3	6	19300	RS274M025TA00□□□
	330000	76.2	120	80	3	6	21000	RS334M025TA20□□□

STANDARD RATINGS

□□□ see terminal code at dimensions table

V_R (V)	C_R (µF)	ø D (mm)	L (mm)	tanδ % (+20°C) (120Hz))	Typ. ESR +20°C ▪ 120Hz (mΩ)	Max. ESR +20°C ▪ 120Hz (mΩ)	I_R ▪ Max. Ripple Current +85°C ▪ 120Hz (mA rms)	CapXon Part Number
25	330000	76.2	140	80	3	6	22500	RS334M025TA40□□□
	390000	76.2	115	80	3	6	22800	RS394M025TA15□□□
	390000	76.2	140	80	3	6	24800	RS394M025TA40□□□
	470000	76.2	150	80	3	6	25300	RS474M025TA50□□□
	560000	89	130	130	3	6	26000	RS564M025XA30□□□
	560000	89	140	130	3	6	26800	RS564M025XA40□□□
	680000	89	160	130	3	6	27500	RS684M025XA60□□□
	820000	89	190	130	3	6	30000	RS824M025XA90□□□
	1000000	89	220	130	3	6	33000	RS105M025XB20□□□
35	10000	35	50	30	19	40	4000	RS103M035P500□□□
	12000	35	50	30	17	33	4300	RS123M035P500□□□
	15000	35	50	30	14	27	4500	RS153M035P500□□□
	15000	35	80	30	14	27	5500	RS153M035P800□□□
	18000	35	80	30	12	22	6000	RS183M035P800□□□
	22000	35	100	30	10	18	7000	RS223M035PA00□□□
	22000	35	80	30	10	18	6300	RS223M035P800□□□
	27000	35	100	30	9	17	8000	RS273M035PA00□□□
	27000	35	80	30	9	17	7200	RS273M035P800□□□
	33000	35	100	30	8	15	9300	RS333M035PA00□□□
	33000	35	80	30	8	15	8400	RS333M035P800□□□
	39000	35	100	30	7	13	10000	RS393M035PA00□□□
	39000	35	120	30	7	13	10900	RS393M035PA20□□□
	47000	35	120	30	6	11	11500	RS473M035PA20□□□
	47000	51	96	50	6	11	12800	RS473M035R960□□□
	56000	51	96	50	6	10	13300	RS563M035R960□□□
	68000	51	100	50	5	10	15400	RS683M035RA00□□□
	68000	51	80	50	5	10	14000	RS683M035R800□□□
	82000	51	100	50	5	9	16000	RS823M035RA00□□□
	82000	63.5	96	60	5	9	17700	RS823M035S960□□□
	100000	51	120	50	4	8	18500	RS104M035RA20□□□
	100000	63.5	100	60	4	8	19300	RS104M035SA00□□□
	100000	63.5	115	60	4	8	20500	RS104M035SA15□□□
	120000	51	120	50	4	7	21000	RS124M035RA20□□□
	120000	63.5	120	60	4	7	23000	RS124M035SA20□□□
	150000	63.5	100	60	3	6	23700	RS154M035SA00□□□
	150000	63.5	120	60	3	6	25700	RS154M035SA20□□□
	180000	63.5	120	60	3	6	26200	RS184M035SA20□□□
	180000	76.2	115	70	3	6	27000	RS184M035TA15□□□
	220000	76.2	100	70	3	6	27600	RS224M035TA00□□□
	220000	76.2	140	70	3	6	31900	RS224M035TA40□□□
	220000	76.2	145	70	3	6	32400	RS224M035TA45□□□
	270000	76.2	120	70	3	5	32700	RS274M035TA20□□□
	330000	76.2	140	70	3	5	33100	RS334M035TA40□□□
	330000	76.2	160	70	3	5	35100	RS334M035TA60□□□

For further information please contact sales@capxon.org

STANDARD RATINGS

□□□ see terminal code at dimensions table

V_R (V)	C_R (µF)	ø D (mm)	L (mm)	tanδ % (+20°C) (120Hz)	Typ. ESR +20°C ▪ 120Hz (mΩ)	Max. ESR +20°C ▪ 120Hz (mΩ)	I_R ▪ Max. Ripple Current +85°C ▪ 120Hz (mA rms)	CapXon Part Number
35	330000	89	130	90	3	5	35500	RS334M035XA30□□□
	390000	89	155	90	3	5	36000	RS394M035XA55□□□
	470000	89	140	90	3	5	37000	RS474M035XA40□□□
	470000	89	170	90	3	5	40300	RS474M035XA70□□□
	680000	89	220	90	3	5	43000	RS684M035XB20□□□
40	10000	35	55	30	19	37	6300	RS103M040P550□□□
	15000	35	80	30	14	27	9000	RS153M040P800□□□
	22000	35	80	30	10	18	11000	RS223M040P800□□□
	33000	35	105	30	8	15	12000	RS333M040PA05□□□
	47000	51	80	50	6	11	14200	RS473M040R800□□□
	68000	51	105	50	5	10	15500	RS683M040RA05□□□
	100000	63.5	105	60	4	8	17000	RS104M040SA05□□□
	150000	76.2	105	70	3	6	19000	RS154M040TA05□□□
	220000	76.2	140	70	3	6	21000	RS224M040TA40□□□
50	6800	35	50	25	22	42	3700	RS682M050P500□□□
	10000	35	50	25	16	30	6400	RS103M050P500□□□
	10000	35	60	25	16	30	6600	RS103M050P600□□□
	12000	35	65	25	13	25	6900	RS123M050P650□□□
	12000	35	80	25	13	25	7200	RS123M050P800□□□
	15000	35	80	25	11	21	8700	RS153M050P800□□□
	18000	35	100	25	10	18	8800	RS183M050PA00□□□
	18000	35	80	25	10	18	8500	RS183M050P800□□□
	22000	35	100	25	8	15	10000	RS223M050PA00□□□
	22000	35	120	25	8	15	10500	RS223M050PA20□□□
	27000	35	120	25	7	13	10000	RS273M050PA20□□□
	33000	51	100	30	6	11	11000	RS333M050RA00□□□
	33000	51	80	30	6	11	11800	RS333M050R800□□□
	39000	51	100	30	6	10	12500	RS393M050RA00□□□
	39000	51	80	30	6	10	12000	RS393M050R800□□□
	47000	51	100	30	5	10	12800	RS473M050RA00□□□
	47000	51	115	30	5	10	13000	RS473M050RA15□□□
	56000	51	100	30	4	8	13000	RS563M050RA00□□□
	56000	63.5	96	50	4	8	13500	RS563M050S960□□□
	68000	51	120	30	3	8	13000	RS683M050RA20□□□
	68000	51	140	30	3	8	13500	RS683M050RA40□□□
	68000	63.5	96	50	3	8	13500	RS683M050S960□□□
	82000	63.5	100	50	3	7	14000	RS823M050SA00□□□
	82000	63.5	115	50	3	7	14000	RS823M050SA15□□□
	100000	63.5	120	50	3	7	14500	RS104M050SA20□□□
	100000	63.5	140	50	3	7	15500	RS104M050SA40□□□
	100000	76.2	100	60	3	7	14000	RS104M050TA00□□□
	100000	76.2	115	60	3	7	15000	RS104M050TA15□□□
	120000	63.5	120	50	3	7	16000	RS124M050SA20□□□
	120000	63.5	145	50	3	7	17000	RS124M050SA45□□□

For further information please contact sales@capxon.org

STANDARD RATINGS

□□□ see terminal code at dimensions table

V_R (V)	C_R (µF)	ø D (mm)	L (mm)	tanδ % (+20°C) (120Hz)	Typ. ESR +20°C ▪ 120Hz (mΩ)	Max. ESR +20°C ▪ 120Hz (mΩ)	I_R ▪ Max. Ripple Current +85°C ▪ 120Hz (mA rms)	CapXon Part Number
50	120000	76.2	115	60	3	7	17000	RS124M050TA15□□□
	150000	76.2	120	60	3	6	18200	RS154M050TA20□□□
	150000	76.2	130	60	3	6	18800	RS154M050TA30□□□
	150000	76.2	140	60	3	6	19000	RS154M050TA40□□□
	180000	76.2	140	60	3	6	20000	RS184M050TA40□□□
	180000	76.2	145	60	3	6	21000	RS184M050TA45□□□
	180000	76.2	155	60	3	6	22000	RS184M050TA55□□□
	220000	76.2	160	60	3	6	21500	RS224M050TA60□□□
	220000	89	130	80	3	6	21500	RS224M050XA30□□□
	270000	89	140	80	3	5	24700	RS274M050XA40□□□
	270000	89	155	80	3	5	25500	RS274M050XA55□□□
	330000	89	160	80	3	5	26000	RS334M050XA60□□□
63	3900	35	50	20	42	68	2600	RS392M063P500□□□
	4700	35	50	20	30	56	4700	RS472M063P500□□□
	4700	35	55	20	30	56	4800	RS472M063P550□□□
	5600	35	50	20	24	47	5000	RS562M063P500□□□
	5600	35	55	20	24	47	5300	RS562M063P550□□□
	6800	35	50	20	22	39	5200	RS682M063P500□□□
	6800	35	55	20	22	39	5900	RS682M063P550□□□
	6800	35	65	20	22	39	6200	RS682M063P650□□□
	8200	35	65	20	18	32	6500	RS822M063P650□□□
	8200	35	80	20	18	32	6800	RS822M063P800□□□
	10000	35	60	20	16	27	6900	RS103M063P600□□□
	10000	35	80	20	16	27	7500	RS103M063P800□□□
	12000	35	100	20	14	22	8800	RS123M063PA00□□□
	12000	35	80	20	14	22	8000	RS123M063P800□□□
	15000	35	105	20	11	21	10000	RS153M063PA05□□□
	18000	35	100	20	10	19	10000	RS183M063PA00□□□
	18000	35	120	20	10	19	10500	RS183M063PA20□□□
	22000	51	80	25	8	15	11000	RS223M063R800□□□
	27000	51	80	25	7	13	11500	RS273M063R800□□□
	27000	51	96	25	7	13	12000	RS273M063R960□□□
	33000	51	100	25	6	11	13500	RS333M063RA00□□□
	33000	51	105	25	6	11	14000	RS333M063RA05□□□
	39000	51	100	25	6	10	14000	RS393M063RA00□□□
	39000	51	115	25	6	10	14500	RS393M063RA15□□□
	39000	51	120	25	6	10	15000	RS393M063RA20□□□
	47000	51	120	25	5	10	16500	RS473M063RA20□□□
	47000	51	130	25	5	10	17000	RS473M063RA30□□□
	47000	63.5	100	30	5	10	17000	RS473M063SA00□□□
	47000	63.5	105	30	5	10	19000	RS473M063SA05□□□
	56000	63.5	100	30	4	8	17000	RS563M063SA00□□□
	56000	63.5	115	30	4	8	18500	RS563M063SA15□□□
	68000	63.5	120	30	3	7	19000	RS683M063SA20□□□

For further information please contact sales@capxon.org

STANDARD RATINGS

□□□ see terminal code at dimensions table

V_R (V)	C_R (µF)	ø D (mm)	L (mm)	tanδ % (+20°C) (120Hz)	Typ. ESR +20°C ▪ 120Hz (mΩ)	Max. ESR +20°C ▪ 120Hz (mΩ)	I_R ▪ Max. Ripple Current +85°C ▪ 120Hz (mA rms)	CapXon Part Number
63	68000	63.5	145	30	3	7	20500	RS683M063SA45□□□
	68000	76.2	105	40	3	7	20200	RS683M063TA05□□□
	82000	63.5	130	30	3	7	20500	RS823M063SA30□□□
	82000	63.5	145	30	3	7	21000	RS823M063SA45□□□
	100000	76.2	115	40	3	7	22000	RS104M063TA15□□□
	100000	76.2	120	40	3	7	23000	RS104M063TA20□□□
	100000	76.2	130	40	3	7	24000	RS104M063TA30□□□
	100000	76.2	140	40	3	7	25000	RS104M063TA40□□□
	120000	76.2	130	40	3	7	26000	RS124M063TA30□□□
	120000	76.2	140	40	3	7	27000	RS124M063TA40□□□
	120000	76.2	145	40	3	7	27500	RS124M063TA45□□□
	150000	76.2	155	40	3	7	28500	RS154M063TA55□□□
	150000	76.2	220	40	3	7	31000	RS154M063TB20□□□
	150000	89	140	60	3	7	28500	RS154M063XA40□□□
	180000	89	130	60	3	6	29000	RS184M063XA30□□□
	220000	89	155	60	3	6	31000	RS224M063XA55□□□
	220000	89	160	60	3	6	31500	RS224M063XA60□□□
	270000	76.2	220	40	3	5	32000	RS274M063TB20□□□
	330000	89	220	60	3	5	34000	RS334M063XB20□□□
80	3300	35	50	20	50	80	2500	RS332M080P500□□□
	3900	35	50	20	36	68	2800	RS392M080P500□□□
	4700	35	60	20	25	46	5000	RS472M080P600□□□
	5600	35	65	20	22	40	5500	RS562M080P650□□□
	5600	35	80	20	22	40	6000	RS562M080P800□□□
	6800	35	60	20	19	35	6300	RS682M080P600□□□
	6800	35	80	20	19	35	6500	RS682M080P800□□□
	8200	35	80	20	17	32	7200	RS822M080P800□□□
	10000	35	100	20	13	23	8500	RS103M080PA00□□□
	10000	35	80	20	13	23	8000	RS103M080P800□□□
	12000	35	100	20	11	20	9200	RS123M080PA00□□□
	12000	35	120	20	11	20	9500	RS123M080PA20□□□
	15000	35	120	20	9	17	10500	RS153M080PA20□□□
	15000	51	80	20	9	17	10500	RS153M080R800□□□
	18000	35	120	20	8	15	11000	RS183M080PA20□□□
	18000	51	80	20	8	15	11000	RS183M080R800□□□
	22000	51	100	20	7	12	12000	RS223M080RA00□□□
	22000	51	96	20	7	12	11800	RS223M080R960□□□
	27000	51	96	20	7	11	13000	RS273M080R960□□□
	27000	63.5	100	25	7	11	15000	RS273M080SA00□□□
	33000	51	115	20	6	11	14800	RS333M080RA15□□□
	33000	51	120	20	6	11	15200	RS333M080RA20□□□
	33000	63.5	100	25	6	11	15200	RS333M080SA00□□□
	39000	51	130	20	6	11	16000	RS393M080RA30□□□
	39000	63.5	120	25	6	11	16500	RS393M080SA20□□□

For further information please contact sales@capxon.org

STANDARD RATINGS

□□□ see terminal code at dimensions table

V_R (V)	C_R (µF)	ø D (mm)	L (mm)	tanδ % (+20°C) (120Hz)	Typ. ESR +20°C ▪ 120Hz (mΩ)	Max. ESR +20°C ▪ 120Hz (mΩ)	I_R ▪ Max. Ripple Current +85°C ▪ 120Hz (mA rms)	CapXon Part Number
80	47000	63.5	115	25	6	10	20000	RS473M080SA15□□□
	47000	63.5	120	25	6	10	20500	RS473M080SA20□□□
	47000	63.5	145	25	6	10	21000	RS473M080SA45□□□
	56000	63.5	130	25	5	10	22000	RS563M080SA30□□□
	56000	63.5	145	25	5	10	23000	RS563M080SA45□□□
	68000	76.2	115	30	5	10	22000	RS683M080TA15□□□
	68000	76.2	120	30	5	10	23000	RS683M080TA20□□□
	68000	76.2	145	30	5	10	24000	RS683M080TA45□□□
	82000	76.2	130	30	5	9	24000	RS823M080TA30□□□
	82000	76.2	140	30	5	9	24500	RS823M080TA40□□□
	82000	76.2	145	30	5	9	25000	RS823M080TA45□□□
	100000	76.2	155	30	4	8	25500	RS104M080TA55□□□
	100000	76.2	160	30	4	8	26000	RS104M080TA60□□□
	100000	89	140	50	4	8	26000	RS104M080XA40□□□
	120000	89	130	50	4	7	23000	RS124M080XA30□□□
	150000	89	155	50	4	7	29000	RS154M080XA55□□□
	150000	89	160	50	4	7	30000	RS154M080XA60□□□
	220000	89	230	50	3	6	33000	RS224M080XB30□□□
100	1800	35	50	15	50	90	3500	RS182M100P500□□□
	2200	35	50	15	40	75	4300	RS222M100P500□□□
	2700	35	50	15	35	65	4500	RS272M100P500□□□
	3300	35	65	15	28	53	4800	RS332M100P650□□□
	3300	35	80	15	28	53	5300	RS332M100P800□□□
	3900	35	80	15	24	42	5600	RS392M100P800□□□
	4700	35	80	15	20	36	6700	RS472M100P800□□□
	5600	35	100	15	18	29	7200	RS562M100PA00□□□
	6800	35	100	15	15	24	7500	RS682M100PA00□□□
	6800	35	105	15	15	24	8700	RS682M100PA05□□□
	6800	35	80	15	15	24	8000	RS682M100P800□□□
	8200	35	120	15	12	20	9500	RS822M100PA20□□□
	8200	51	80	20	12	20	9500	RS822M100R800□□□
	10000	35	120	15	12	18	10000	RS103M100PA20□□□
	10000	51	80	20	9	18	10000	RS103M100R800□□□
	12000	51	80	20	9	16	10500	RS123M100R800□□□
	15000	51	100	20	8	15	12400	RS153M100RA00□□□
	15000	51	105	20	8	15	13000	RS153M100RA05□□□
	15000	51	80	20	8	15	11000	RS153M100R800□□□
	15000	51	96	20	8	15	11500	RS153M100R960□□□
	18000	51	100	20	7	14	12600	RS183M100RA00□□□
	18000	51	115	20	7	14	14000	RS183M100RA15□□□
	18000	51	120	20	7	14	14500	RS183M100RA20□□□
	18000	63.5	100	25	7	14	15000	RS183M100SA00□□□
	22000	51	100	20	6	11	13300	RS223M100RA00□□□
	22000	51	120	20	6	11	15500	RS223M100RA20□□□

For further information please contact sales@capxon.org

STANDARD RATINGS

□□□ see terminal code at dimensions table

V_R (V)	C_R (µF)	ø D (mm)	L (mm)	tanδ % (+20°C) (120Hz))	Typ. ESR +20°C ▪ 120Hz (mΩ)	Max. ESR +20°C ▪ 120Hz (mΩ)	I_R ▪ Max. Ripple Current +85°C ▪ 120Hz (mA rms)	CapXon Part Number
100	22000	51	130	20	6	11	16000	RS223M100RA30□□□
	22000	63.5	100	25	6	11	16500	RS223M100SA00□□□
	22000	63.5	105	25	6	11	17000	RS223M100SA05□□□
	27000	63.5	115	25	6	10	18000	RS273M100SA15□□□
	27000	63.5	120	25	6	10	18500	RS273M100SA20□□□
	33000	51	140	20	5	9	18500	RS333M100RA40□□□
	33000	63.5	130	25	5	9	18800	RS333M100SA30□□□
	33000	63.5	145	25	5	9	19000	RS333M100SA45□□□
	33000	76.2	100	30	5	9	18800	RS333M100TA00□□□
	33000	76.2	105	30	5	9	19000	RS333M100TA05□□□
	39000	76.2	115	30	5	9	20200	RS393M100TA15□□□
	39000	76.2	120	30	5	9	20500	RS393M100TA20□□□
	39000	76.2	145	30	5	9	21000	RS393M100TA45□□□
	47000	63.5	140	25	5	9	22000	RS473M100SA40□□□
	47000	76.2	130	30	5	9	24000	RS473M100TA30□□□
	47000	76.2	140	30	5	9	25000	RS473M100TA40□□□
	47000	76.2	145	30	5	9	25200	RS473M100TA45□□□
	56000	76.2	155	30	4	8	26000	RS563M100TA55□□□
	68000	76.2	140	30	4	8	26400	RS683M100TA40□□□
	68000	89	130	30	4	8	26500	RS683M100XA30□□□
	68000	89	140	30	4	8	26700	RS683M100XA40□□□
	82000	89	155	30	4	7	27000	RS823M100XA55□□□
	100000	89	160	30	4	7	27200	RS104M100XA60□□□
	100000	89	170	30	4	7	27500	RS104M100XA70□□□
	150000	89	230	30	3	6	31000	RS154M100XB30□□□

MULTIPLIER K_f for RIPPLE CURRENT vs. FREQUENCY

V_R (V)	ØD (mm)	Frequency (Hz)				
		50/60	100/120	1k	10k	≥ 50k
10 ~ 50	35 ~ 89	0.95	1	1.05	1.09	1.12
63 ~ 80	35	0.9	1	1.1	1.18	1.22
	50 ~ 89	0.95	1	1.05	1.09	1.12
100	35	0.8	1	1.22	1.3	1.33
	50	0.9	1	1.1	1.18	1.22
	63.5 ~ 89	0.95	1	1.05	1.09	1.12

For further information please contact sales@capxon.org

DIMENSIONS ▪ Ring clamp mounting ▪ All dimensions in mm

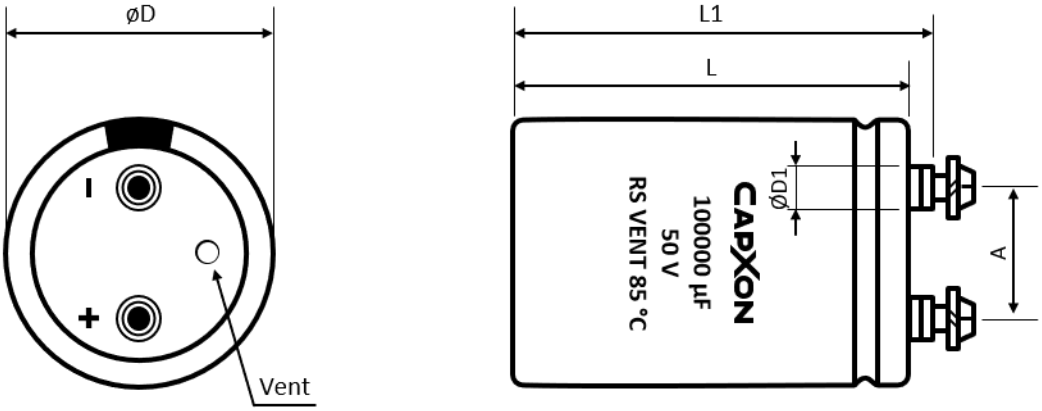

Terminal	Dimensions (mm) with insulating sleeve					Min. Full Thread (mm)	Max. Torque (Nm)	Terminal code
	D ± 2	L ± 3	L1 ± 3	D1 max.	A ± 0.5			
M5	35	50 ~ 120	56.5 ~ 126.5	8.3	12.7	8	2	A50
M5	51	50 ~ 140	56.5 ~ 146.5	10.3	22	8	2	A50
M5	63.5	80 ~ 140	86.5 ~ 146.5	10.3	28.6	8	2	A50
M5	63.5	80 ~ 140	86.5 ~ 146.5	13	28.6	8	2	A53
M5	76.2	100 ~ 240	106.5 ~ 246.5	10.3	31.8	12	2.5	A50
M5	76.2	100 ~ 240	106.5 ~ 246.5	13	31.8	12	2.5	A53
M6	76.2	100 ~ 240	106.5 ~ 246.5	13	31.8	12	2.5	A63
M6	76.2	100 ~ 240	106.5 ~ 246.5	17.5	31.8	12	2.5	A67
M6	89	100 ~ 240	106.5 ~ 246.5	13	31.8	12	2.5	A63
M6	89	100 ~ 240	106.5 ~ 246.5	17.5	31.8	12	2.5	A67

DIMENSIONS ▪ Threaded stud mounting ▪ All dimensions in mm

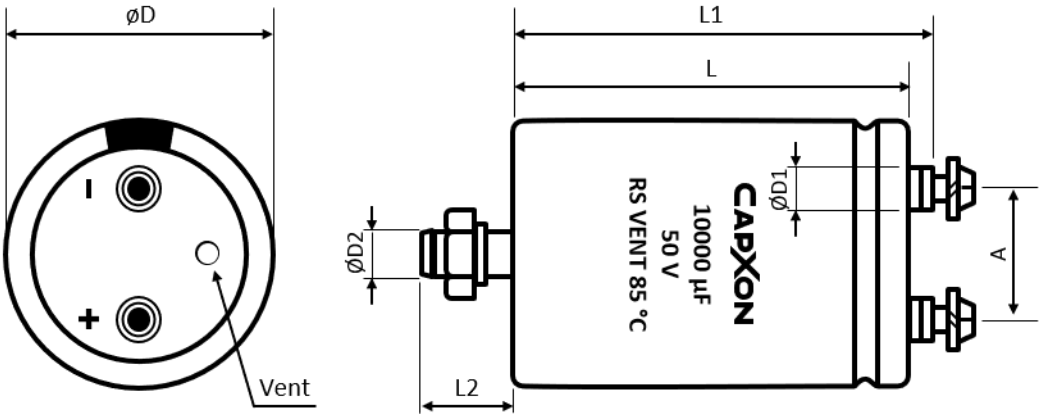

For further information please contact sales@capxon.org

DIMENSIONS ▪ Threaded stud mounting ▪ All dimensions in mm

Terminal	Dimensions (mm) with insulating sleeve							Min. Full Thread (mm)	Max. Torque (Nm)	Terminal code
	D ± 2	L ± 3	L1 ± 3	L2 ± 1	D1 max.	D2	A ± 0.5			
M5	35	50 ~ 120	56.5 ~ 126.5	12	8.3	M8	12.7	8	2	E50
M5	51	50 ~ 140	56.5 ~ 146.5	16	10.3	M12	22	8	2	E50
M5	63.5	80 ~ 140	86.5 ~ 146.5	16	10.3	M12	28.6	8	2	E50
M5	63.5	80 ~ 140	86.5 ~ 146.5	16	13	M12	28.6	8	2	E53
M5	76.2	100 ~ 240	106.5 ~ 246.5	16	10.3	M12	31.8	12	2.5	E50
M5	76.2	100 ~ 240	106.5 ~ 246.5	16	13	M12	31.8	12	2.5	E53
M6	76.2	100 ~ 240	106.5 ~ 246.5	16	13	M12	31.8	12	2.5	E63
M6	76.2	100 ~ 240	106.5 ~ 246.5	16	17.5	M12	31.8	12	2.5	E67
M6	89	100 ~ 240	106.5 ~ 246.5	16	13	M12	31.8	12	2.5	E63
M6	89	100 ~ 240	106.5 ~ 246.5	16	17.5	M12	31.8	12	2.5	E67

ACCESSORIES

- The capacitors are supplied with suitable screws, serrated washers and plain washers. Accessories are not fastened to the capacitor.
- Suitable ring clamps and further assembly material see additional information “Accessories”.

PRECAUTIONS, GUIDELINES AND PACKAGING INFORMATON

Unless otherwise agreed in individual specifications, all products are subject to our “General Precautions and Guidelines” as well as our “Packaging Information”. Please refer to the following pages in the table.

	
General Precautions and Guidelines	Packaging Information Liquid Screw
Page 837	Page 681

For further information please contact sales@capxon.org

USEFUL LIFE

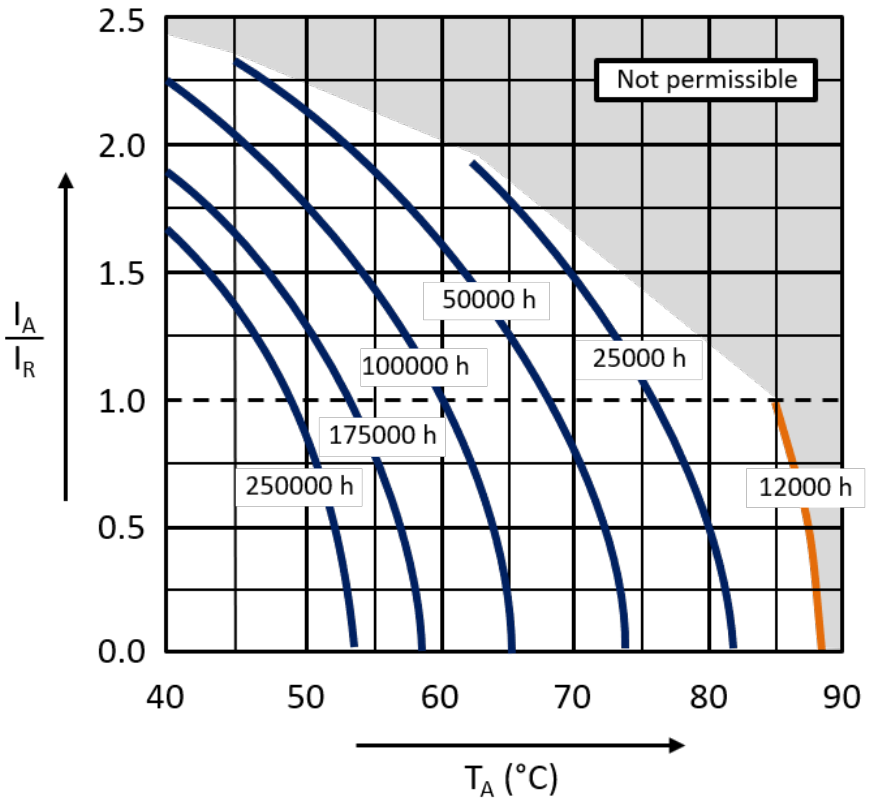

With: I_A: Actual application current
I_R: Maximum permissible rated ripple current (A RMS)
T_A: Ambient temperature of the capacitor

DISCLAIMER
All product related data (e.g. specification, statements and general information) are subject to change without any notice. It is necessary that the customer observes all product related technical / application information and handling instructions.

CapXon products are designed and manufactured according to severe quality and safety standards. Under no circumstance, CapXon warrants that any CapXon product is suitable for the purposes intended for your application, even CapXon knows the application. It is customer's duty and obligation to check and make sure that CapXon products are suitable for the purposes intended and select the correct and proper CapXon product. Customers are requested to perform a sufficient validation and reliability evaluation to assure needed safety level and reliability performance by suitable designs and to apply proper safeguards (e.g. redundancies, protective circuits).

Particular operating conditions (ambient temperature, ripple current, voltage, thermal resistance, etc.) as well as storage, production or assembly may affect the performance and the lifetime of the capacitor. Please consult CapXon for lifetime estimation, failure mode considerations or worst-case scenarios according to the product technology, product tolerances / deviations or change of the characteristics of the capacitor due to shipment, storage, handling, production and usage.

For aerospace or military application, life-saving, life-sustaining, safety critical applications or any application where failure may cause severe personal injury or death, please consult us before design-in the capacitor in your application.

Except for the written expressed warranties, CapXon does not impliedly, by assumption or whatever else, warrant, undertake, promise any other warranty or guaranty for any CapXon product.

For further information, please visit our website www.capxongroup.com or contact CapXon directly.

RG SERIES ▪ STANDARD 85°C TYPE



Key FEATURES

HIGH VOLTAGE

- **ALUMINUM ELECTROLYTIC CAPACITOR** ▪ Screw terminal type
- Useful life: 85°C ▪ 6 000 hours
- Wide capacitance range
- All-welded construction ensures highest reliability
- Bottom cooling possible due to the thermal construction

SPECIFICATIONS

Items		Performance Characteristics			
Operating Temperature Range		-40 ~ +85°C		-25 ~ +85°C	
Rated Voltage Range	V_R	160 ~ 450V DC		500 ~ 630V DC	
Surge Voltage	V_S	($V_R \le 315V$): $V_S = 1.15 \cdot V_R$		($V_R > 315V$): $V_S = 1.10 \cdot V_R$	
Capacitance Range	C_R	390 ~ 39000µF		1000 ~ 10000µF	
Cap. Tolerance	ΔC	±20% (120Hz ▪ 20°C)			
Leakage Current (20°C ▪ V_R applied)	I_{LEAK}	$\le 0.018 \cdot (C_R \cdot V_R)^{0.85} + 4$ (µA) or 5mA (whichever is smaller) ▪ After 5 minutes [I_{LEAK} (µA) ; C_R (µF) ; V_R (V)]			
Dissipation Factor % (20°C ▪ 120Hz)	tanδ	V_R (V DC)	160 ~ 450	500 ~ 550	≥ 600
		tanδ	15	20	25
Low Temperature Characteristics at 120Hz	Z ratio max.	V_R (V DC)	160 ~ 450	≥ 500	
		Z-25°C/Z+20°C	4	4	
		Z-40°C/Z+20°C	10	-	

Lifetime Test		
Useful Life 85°C (V_R & I_R applied)	Test	**6 000 hours**
	$\triangle C/C_R$	≤ ±15% of initial measured value
	tanδ	≤ 175% of initial specified value
	I_{Leak}	≤ the initial specified value
	Deviation Rate @ Useful Life: 10 000 FIT = 1%/1000h with 60% confidence level ▪ parts show higher drift as test criteria	
Endurance 85°C (V_R & I_R applied)	Test	**2 000 hours**
	$\triangle C/C_R$	≤ ±10% of initial measured value
	tanδ	≤ 130% of initial specified value
	I_{Leak}	≤ the initial specified value
Shelf Life 85°C (V_R = 0)	Test	**1 000 hours**
	$\triangle C/C_R$	≤ ±10% of initial measured value
	tanδ	≤ 130% of initial specified value
	I_{Leak}	≤ the initial specified value
	Before measurement: Restore capacitor to 20°C, apply V_R for 30 min according JIS-C-5101-4	
Vibration Resistance Test	Max. 10g force, f_{RANGE} 10Hz … 55Hz, amplitude 0.75mm; X/Y/Z-axis each 2h; capacitor rigidly clamped by body to surface ▪ IEC 60068-2-6	

For further information please contact sales@capxon.org

STANDARD RATINGS

□□□ see terminal code at dimensions table

V_R (V)	C_R (µF)	ø D (mm)	L (mm)	Typ. ESR +20°C ▪ 120Hz (mΩ)	Max. ESR +20°C ▪ 120Hz (mΩ)	I_R ▪ Max. Ripple Current +85°C ▪ 120Hz (mA rms)	CapXon Part Number
160	1000	35	60	120	200	2800	RG102M160P600□□□
	1500	35	60	76	130	3000	RG152M160P600□□□
	2200	35	100	53	90	4000	RG222M160PA00□□□
	3300	35	100	35	60	4700	RG332M160PA00□□□
	3900	51	75	30	51	5300	RG392M160R750□□□
	4700	51	75	25	42	6000	RG472M160R750□□□
	5600	51	96	21	36	7000	RG562M160R960□□□
	6800	51	96	17	29	8500	RG682M160R960□□□
	8200	51	115	14	24	9200	RG822M160RA15□□□
	10000	51	120	12	20	10500	RG103M160RA20□□□
	10000	63.5	96	12	20	10500	RG103M160S960□□□
	12000	51	120	10	17	11500	RG123M160RA20□□□
	12000	63.5	100	10	17	11700	RG123M160SA00□□□
	15000	63.5	120	8	13	14300	RG153M160SA20□□□
	18000	63.5	130	7	11	15600	RG183M160SA30□□□
	22000	76.2	120	5	9	16700	RG223M160TA20□□□
	27000	76.2	130	4	7	20200	RG273M160TA30□□□
	33000	89	130	4	6	23800	RG333M160XA30□□□
	39000	89	157	3	5	27900	RG393M160XA57□□□
200	1000	35	60	120	200	3000	RG102M200P600□□□
	1500	35	80	76	130	3300	RG152M200P800□□□
	2200	35	100	53	90	4200	RG222M200PA00□□□
	2700	35	120	43	74	4700	RG272M200PA20□□□
	3300	35	120	35	60	4800	RG332M200PA20□□□
	3300	51	80	35	60	4900	RG332M200R800□□□
	3900	51	75	30	51	5500	RG392M200R750□□□
	4700	51	96	25	42	6400	RG472M200R960□□□
	5600	51	115	21	36	7600	RG562M200RA15□□□
	6800	51	130	17	29	8800	RG682M200RA30□□□
	8200	63.5	96	14	24	9400	RG822M200S960□□□
	10000	63.5	120	12	20	11200	RG103M200SA20□□□
	10000	63.5	96	12	20	10400	RG103M200S960□□□
	15000	76.2	96	8	13	14400	RG153M200T960□□□
	18000	76.2	130	7	11	16500	RG183M200TA30□□□
	22000	76.2	155	5	9	19600	RG223M200TA55□□□
	22000	89	120	5	9	19200	RG223M200XA20□□□
	27000	89	130	4	7	21500	RG273M200XA30□□□
	33000	89	157	4	6	25300	RG333M200XA57□□□
250	680	35	60	170	290	1800	RG681M250P600□□□
	1000	35	80	120	200	3300	RG102M250P800□□□
	1500	35	80	76	130	3500	RG152M250P800□□□
	1800	35	100	65	110	3500	RG182M250PA00□□□
	2200	35	120	53	90	3800	RG222M250PA20□□□
	2200	51	75	53	90	4000	RG222M250R750□□□

STANDARD RATINGS

□□□ see terminal code at dimensions table

V_R (V)	C_R (µF)	ø D (mm)	L (mm)	Typ. ESR +20°C ▪ 120Hz (mΩ)	Max. ESR +20°C ▪ 120Hz (mΩ)	I_R ▪ Max. Ripple Current +85°C ▪ 120Hz (mA rms)	CapXon Part Number
250	2700	51	75	43	74	4400	RG272M250R750□□□
	3300	51	96	35	60	5400	RG332M250R960□□□
	3900	51	115	30	51	6300	RG392M250RA15□□□
	4700	51	120	25	42	7000	RG472M250RA20□□□
	4700	63.5	96	25	42	7300	RG472M250S960□□□
	5600	63.5	96	21	36	7800	RG562M250S960□□□
	6800	51	140	17	29	8500	RG682M250RA40□□□
	6800	63.5	115	17	29	9100	RG682M250SA15□□□
	6800	76.2	100	17	29	9500	RG682M250TA00□□□
	8200	63.5	115	14	24	10000	RG822M250SA15□□□
	10000	63.5	130	12	20	11700	RG103M250SA30□□□
	10000	76.2	115	12	20	12200	RG103M250TA15□□□
	12000	76.2	115	10	17	12900	RG123M250TA15□□□
	15000	76.2	130	8	13	15100	RG153M250TA30□□□
	15000	89	120	8	13	15900	RG153M250XA20□□□
	18000	76.2	155	7	11	17700	RG183M250TA55□□□
	22000	89	157	5	9	20900	RG223M250XA57□□□
350	390	35	50	300	510	1700	RG391M350P500□□□
	470	35	80	250	420	2200	RG471M350P800□□□
	560	35	80	210	360	2400	RG561M350P800□□□
	680	35	80	170	290	2600	RG681M350P800□□□
	820	35	100	140	240	3100	RG821M350PA00□□□
	1000	35	100	120	200	3500	RG102M350PA00□□□
	1200	51	75	100	170	3800	RG122M350R750□□□
	1500	51	75	76	130	4300	RG152M350R750□□□
	1800	51	80	65	110	6980	RG182M350R800□□□
	2200	51	96	53	90	8000	RG222M350R960□□□
	2700	51	105	43	74	9100	RG272M350RA05□□□
	2700	63.5	80	43	74	9200	RG272M350S800□□□
	3300	51	115	35	60	10300	RG332M350RA15□□□
	3300	63.5	96	35	60	10900	RG332M350S960□□□
	3900	51	130	30	51	11500	RG392M350RA30□□□
	3900	63.5	100	30	51	11700	RG392M350SA00□□□
	4700	63.5	100	25	42	15100	RG472M350SA00□□□
	5600	63.5	115	21	36	17500	RG562M350SA15□□□
	5600	76.2	96	21	36	18200	RG562M350T960□□□
	6800	63.5	140	17	29	20500	RG682M350SA40□□□
	6800	76.2	100	17	29	20100	RG682M350TA00□□□
	8200	76.2	115	14	24	23400	RG822M350TA15□□□
	10000	76.2	135	12	20	27700	RG103M350TA35□□□
	10000	89	120	12	20	28700	RG103M350XA20□□□
	12000	76.2	168	10	17	30100	RG123M350TA68□□□
	12000	89	125	10	17	28900	RG123M350XA25□□□
	15000	89	150	8	13	34900	RG153M350XA50□□□

For further information please contact sales@capxon.org

STANDARD RATINGS

□□□ see terminal code at dimensions table

V_R (V)	CR (µF)	ø D (mm)	L (mm)	Typ. ESR +20°C ▪ 120Hz (mΩ)	Max. ESR +20°C ▪ 120Hz (mΩ)	I_R ▪ Max. Ripple Current +85°C ▪ 120Hz (mA rms)	CapXon Part Number
400	1000	51	75	120	200	3500	RG102M400R750□□□
	1200	51	75	100	170	3850	RG122M400R750□□□
	1500	51	80	76	130	6590	RG152M400R800□□□
	1800	51	96	65	110	7490	RG182M400R960□□□
	2200	51	105	53	90	8500	RG222M400RA05□□□
	2200	63.5	80	53	90	8000	RG222M400S800□□□
	2700	51	118	43	74	9730	RG272M400RA18□□□
	2700	63.5	96	43	74	10000	RG272M400S960□□□
	3300	63.5	96	35	60	12600	RG332M400S960□□□
	3900	63.5	100	30	51	13700	RG392M400SA00□□□
	4700	63.5	115	25	42	16000	RG472M400SA15□□□
	4700	76.2	96	25	42	16700	RG472M400T960□□□
	5600	63.5	130	21	36	18400	RG562M400SA30□□□
	5600	76.2	105	21	36	18600	RG562M400TA05□□□
	6800	76.2	110	17	29	20900	RG682M400TA10□□□
	8200	76.2	130	14	24	24700	RG822M400TA30□□□
	10000	76.2	160	12	20	26900	RG103M400TA60□□□
	10000	89	125	12	20	26400	RG103M400XA25□□□
	12000	76.2	190	10	17	31800	RG123M400TA90□□□
	12000	89	145	10	17	30800	RG123M400XA45□□□
	15000	89	236	8	13	38200	RG153M400XB36□□□
450	1000	51	75	120	200	3500	RG102M450R750□□□
	1200	51	80	100	170	5360	RG122M450R800□□□
	1500	51	96	76	130	6220	RG152M450R960□□□
	1500	63.5	80	76	130	6250	RG152M450S800□□□
	1800	51	96	65	110	7910	RG182M450R960□□□
	2200	51	118	53	90	8000	RG222M450RA18□□□
	2200	63.5	96	53	90	8260	RG222M450S960□□□
	2700	63.5	100	43	74	11400	RG272M450SA00□□□
	3300	63.5	105	35	60	12900	RG332M450SA05□□□
	3900	63.5	115	30	51	14600	RG392M450SA15□□□
	3900	76.2	100	30	51	15200	RG392M450TA00□□□
	4700	63.5	135	25	42	17200	RG472M450SA35□□□
	4700	76.2	105	25	42	17000	RG472M450TA05□□□
	5600	76.2	115	21	36	19300	RG562M450TA15□□□
	6800	76.2	135	17	29	22800	RG682M450TA35□□□
	10000	76.2	190	12	20	29000	RG103M450TA90□□□
	10000	89	150	12	20	28500	RG103M450XA50□□□
	12000	89	236	10	17	33000	RG123M450XB36□□□
500	1000	51	115	160	270	4600	RG102M500RA15□□□
	1000	51	85	160	270	4020	RG102M500R850□□□
	1200	51	96	130	220	4220	RG122M500R960□□□
	1500	51	115	110	180	5140	RG152M500RA15□□□
	1500	63.5	96	110	180	5420	RG152M500S960□□□
	1800	51	130	88	150	5940	RG182M500RA30□□□

STANDARD RATINGS

□□□ see terminal code at dimensions table

V_R (V)	C_R (µF)	ø D (mm)	L (mm)	Typ. ESR +20°C ▪ 120Hz (mΩ)	Max. ESR +20°C ▪ 120Hz (mΩ)	I_R ▪ Max. Ripple Current +85°C ▪ 120Hz (mA rms)	CapXon Part Number
500	1800	63.5	96	88	150	5950	RG182M500S960□□□
	2200	63.5	115	71	120	7100	RG222M500SA15□□□
	2200	76.2	96	71	120	7300	RG222M500T960□□□
	2700	63.5	130	58	98	8310	RG272M500SA30□□□
	3300	76.2	115	47	80	9650	RG332M500TA15□□□
	3900	76.2	130	40	68	11100	RG392M500TA30□□□
	4700	76.2	155	33	56	13100	RG472M500TA55□□□
	5600	89	145	28	47	13800	RG562M500XA45□□□
	6800	89	155	23	39	15900	RG682M500XA55□□□
	8200	89	180	19	32	17200	RG822M500XA80□□□
	10000	89	236	16	27	22100	RG103M500XB36□□□
550	1200	51	115	130	220	4600	RG122M550RA15□□□
	1500	63.5	96	110	180	5420	RG152M550S960□□□
	1800	76.2	80	88	150	6120	RG182M550T800□□□
	2200	76.2	96	71	120	7300	RG222M550T960□□□
	2700	76.2	115	58	98	8730	RG272M550TA15□□□
	3300	76.2	130	47	80	10200	RG332M550TA30□□□
	3900	76.2	155	40	68	12100	RG392M550TA55□□□
	4700	76.2	180	33	56	15100	RG472M550TA80□□□
	5600	89	155	28	47	14500	RG562M550XA55□□□
600	1200	63.5	96	160	280	7700	RG122M600S960□□□
	1500	63.5	115	130	220	8300	RG152M600SA15□□□
	1500	76.2	96	130	220	8500	RG152M600T960□□□
	1800	63.5	130	110	180	10300	RG182M600SA30□□□
	1800	76.2	96	110	180	10100	RG182M600T960□□□
	2200	76.2	115	88	150	12000	RG222M600TA15□□□
	2700	76.2	130	71	120	12100	RG272M600TA30□□□
	3000	76.2	155	65	110	15600	RG302M600TA55□□□
	3300	76.2	155	59	100	16400	RG332M600TA55□□□
	3300	89	130	59	100	16570	RG332M600XA30□□□
	3900	76.2	190	50	85	17700	RG392M600TA90□□□
	3900	89	145	50	85	17400	RG392M600XA45□□□
	4700	89	157	41	71	21000	RG472M600XA57□□□
	5600	89	190	35	59	22800	RG562M600XA90□□□
	6800	89	220	29	49	24400	RG682M600XB20□□□
630	1000	63.5	130	190	330	6000	RG102M630SA30□□□
	1200	76.2	115	160	280	6700	RG122M630TA15□□□
	1500	76.2	130	130	220	8100	RG152M630TA30□□□
	1800	76.2	155	110	180	9800	RG182M630TA55□□□
	2200	89	130	88	150	10700	RG222M630XA30□□□
	2700	89	157	71	120	12800	RG272M630XA57□□□
	3300	89	171	59	100	14700	RG332M630XA71□□□
	3900	89	196	50	85	17900	RG392M630XA96□□□
	4700	100	220	41	71	21600	RG472M630DB20□□□
	5600	100	250	35	59	24900	RG562M630DB50□□□

DIMENSIONS ▪ Ring clamp mounting ▪ All dimensions in mm

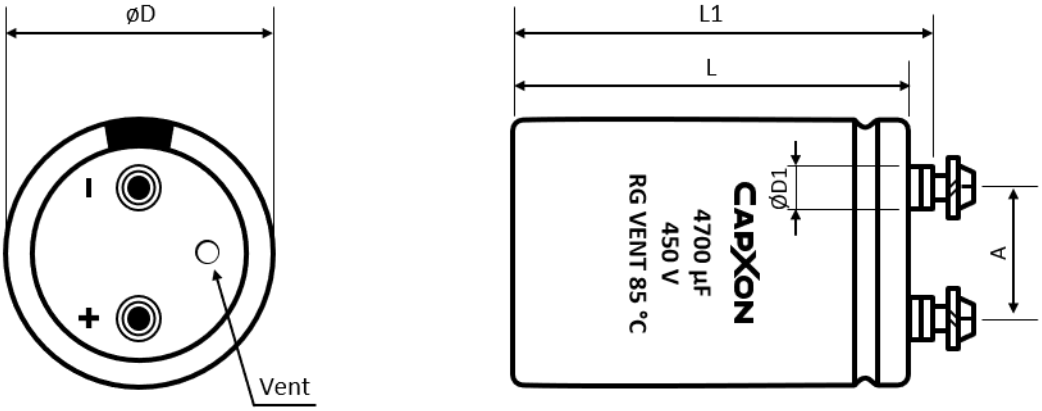

Terminal	Dimensions (mm) with insulating sleeve					Min. Full Thread (mm)	Max. Torque (Nm)	Terminal code
	D ± 2	L ± 3	L1 ± 3	D1 max.	A ± 0.5			
M5	35	50 ~ 120	56.5 ~ 126.5	8.3	12.7	8	2	A50
M5	51	50 ~ 140	56.5 ~ 146.5	10.3	22	8	2	A50
M5	63.5	80 ~ 140	86.5 ~ 146.5	10.3	28.6	8	2	A50
M5	63.5	80 ~ 140	86.5 ~ 146.5	13	28.6	8	2	A53
M5	76.2	100 ~ 240	106.5 ~ 246.5	10.3	31.8	12	2.5	A50
M5	76.2	100 ~ 240	106.5 ~ 246.5	13	31.8	12	2.5	A53
M6	76.2	100 ~ 240	106.5 ~ 246.5	13	31.8	12	2.5	A63
M6	76.2	100 ~ 240	106.5 ~ 246.5	17.5	31.8	12	2.5	A67
M6	89	100 ~ 240	106.5 ~ 246.5	13	31.8	12	2.5	A63
M6	89	100 ~ 240	106.5 ~ 246.5	17.5	31.8	12	2.5	A67
M8	100	100 ~ 240	110 ~ 250	17.5	41.5	16	5	A87

DIMENSIONS ▪ Threaded stud mounting ▪ All dimensions in

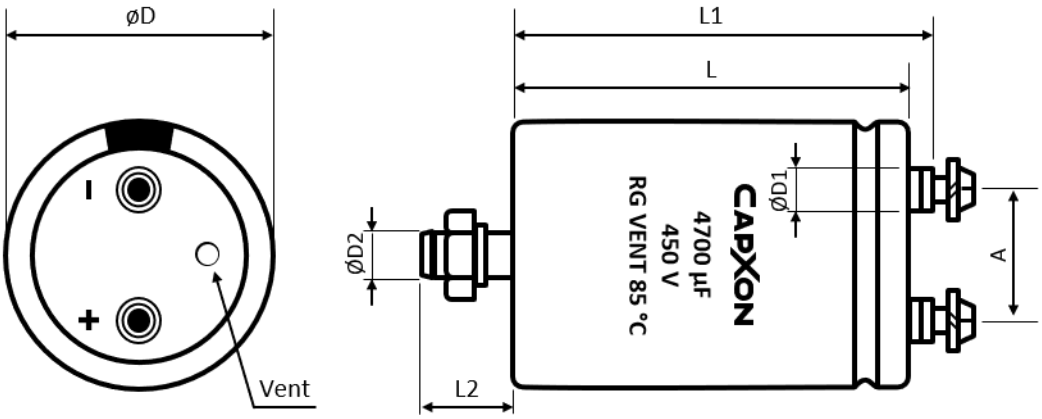

For further information please contact sales@capxon.org

DIMENSIONS ▪ Threaded stud mounting ▪ All dimensions in mm

Terminal	Dimensions (mm) with insulating sleeve							Min. Full Thread (mm)	Max. Torque (Nm)	Terminal code
	D ± 2	L ± 3	L1 ± 3	L2 ± 1	D1 max.	D2	A ± 0.5			
M5	35	50 ~ 120	56.5 ~ 126.5	12	8.3	M8	12.7	8	2	E50
M5	51	50 ~ 140	56.5 ~ 146.5	16	10.3	M12	22	8	2	E50
M5	63.5	80 ~ 140	86.5 ~ 146.5	16	10.3	M12	28.6	8	2	E50
M5	63.5	80 ~ 140	86.5 ~ 146.5	16	13	M12	28.6	8	2	E53
M5	76.2	100 ~ 240	106.5 ~ 246.5	16	10.3	M12	31.8	12	2.5	E50
M5	76.2	100 ~ 240	106.5 ~ 246.5	16	13	M12	31.8	12	2.5	E53
M6	76.2	100 ~ 240	106.5 ~ 246.5	16	13	M12	31.8	12	2.5	E63
M6	76.2	100 ~ 240	106.5 ~ 246.5	16	17.5	M12	31.8	12	2.5	E67
M6	89	100 ~ 240	106.5 ~ 246.5	16	13	M12	31.8	12	2.5	E63
M6	89	100 ~ 240	106.5 ~ 246.5	16	17.5	M12	31.8	12	2.5	E67
M8	100	100 ~ 240	110 ~ 250	16	17.5	M12	41.5	16	5	E87

ACCESSORIES

- The capacitors are supplied with suitable screws, serrated washers and plain washers. Accessories are not fastened to the capacitor.
- Suitable ring clamps and further assembly material see additional information “Accessories”.

MULTIPLIER K_f for RIPPLE CURRENT vs. FREQUENCY

Frequency (Hz)	50/60	100/120	300	1k	≥ 3k
K_f	0.8	1	1.2	1.3	1.4

PRECAUTIONS, GUIDELINES AND PACKAGING INFORMATON

Unless otherwise agreed in individual specifications, all products are subject to our “General Precautions and Guidelines” as well as our “Packaging Information”. Please refer to the following pages in the table.

General Precautions and Guidelines	Packaging Information Liquid Screw
Page 837	Page 681

For further information please contact sales@capxon.org

USEFUL LIFE

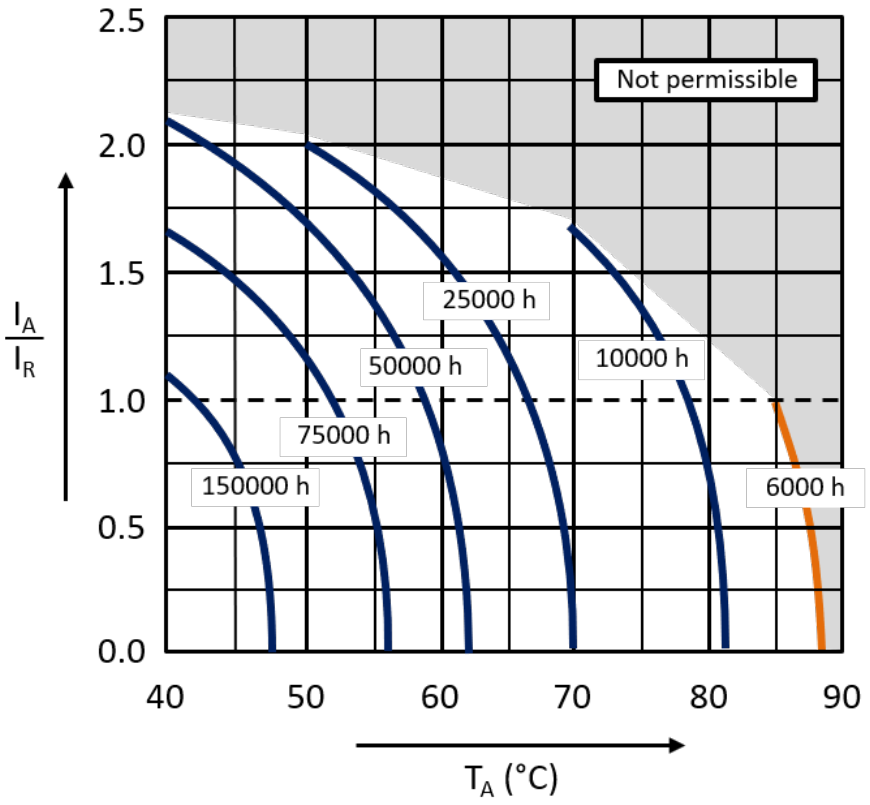

With: I_A: Actual application current
I_R: Maximum permissible rated ripple current (A RMS)
T_A: Ambient temperature of the capacitor

DISCLAIMER

All product related data (e.g. specification, statements and general information) are subject to change without any notice. It is necessary that the customer observes all product related technical / application information and handling instructions.

CapXon products are designed and manufactured according to severe quality and safety standards. Under no circumstance, CapXon warrants that any CapXon product is suitable for the purposes intended for your application, even CapXon knows the application. It is customer's duty and obligation to check and make sure that CapXon products are suitable for the purposes intended and select the correct and proper CapXon product. Customers are requested to perform a sufficient validation and reliability evaluation to assure needed safety level and reliability performance by suitable designs and to apply proper safeguards (e.g. redundancies, protective circuits).

Particular operating conditions (ambient temperature, ripple current, voltage, thermal resistance, etc.) as well as storage, production or assembly may affect the performance and the lifetime of the capacitor. Please consult CapXon for lifetime estimation, failure mode considerations or worst-case scenarios according to the product technology, product tolerances / deviations or change of the characteristics of the capacitor due to shipment, storage, handling, production and usage.

For aerospace or military application, life-saving, life-sustaining, safety critical applications or any application where failure may cause severe personal injury or death, please consult us before design-in the capacitor in your application.

Except for the written expressed warranties, CapXon does not impliedly, by assumption or whatever else, warrant, undertake, promise any other warranty or guaranty for any CapXon product.

For further information, please visit our website www.capxongroup.com or contact CapXon directly.

RP SERIES ▪ LONG LIFE 85°C TYPE

KEY FEATURES

HIGH VOLTAGE LONG LIFE



- **ALUMINUM ELECTROLYTIC CAPACITOR** ▪ Screw terminal type
- Useful life: 85°C ▪ 10000 hours
- Wide capacitance range
- All-welded construction ensures highest reliability
- Bottom cooling possible due to the thermal construction

HF Halogen Free · RoHS & REACH COMPLIANT

SPECIFICATIONS

Items		Performance Characteristics			
Operating Temperature Range		-40 ~ +85°C		-25 ~ +85°C	
Rated Voltage Range	V_R	160 ~ 450V DC		500 ~ 630V DC	
Surge Voltage	V_S	($V_R \le 315V$): $V_S = 1.15 \cdot V_R$		($V_R > 315V$): $V_S = 1.10 \cdot V_R$	
Capacitance Range	C_R	270 ~ 68000µF		100 ~ 10000µF	
Cap. Tolerance	ΔC	±20% (120Hz ▪ 20°C)			
Leakage Current (20°C ▪ V_R applied)	I_{LEAK}	$\le 0.018 \cdot (C_R \cdot V_R)^{0.85} + 4$ (µA) or 5mA (whichever is smaller) ▪ After 5 minutes [I_{LEAK} (µA) ; C_R (µF) ; V_R (V)]			
Dissipation Factor % (20°C ▪ 120Hz)	tanδ	V_R (V DC)	160 ~ 450	≥ 500 ~ 550	≥ 600
		tanδ	15	20	25
Low Temperature Characteristics at 120Hz	Z ratio max.	V_R (V DC)	160 ~ 450	≥ 500	
		Z-25°C/Z+20°C	4	4	
		Z-40°C/Z+20°C	10	-	

Lifetime Test		
Useful Life 85°C (V_R & I_R applied)	Test	**10000 hours**
	△C/C_R	≤ ±15% of initial measured value
	tanδ	≤ 175% of initial specified value
	I_{Leak}	≤ the initial specified value
	Deviation Rate @ Useful Life: 10 000 FIT = 1%/1000h with 60% confidence level ▪ parts show higher drift as test criteria	
Endurance 85°C (V_R & I_R applied)	Test	**2000 hours**
	△C/C_R	≤ ±10% of initial measured value
	tanδ	≤ 130% of initial specified value
	I_{Leak}	≤ the initial specified value
Shelf Life 85°C (V_R = 0)	Test	**1000 hours**
	△C/C_R	≤ ±10% of initial measured value
	tanδ	≤ 130% of initial specified value
	I_{Leak}	≤ the initial specified value
	Before measurement: Restore capacitor to 20°C, apply V_R for 30 min according JIS-C-5101-4	
Vibration Resistance Test	Max. 10g force, f_{RANGE} 10Hz … 55Hz, amplitude 0.75mm; X/Y/Z-axis each 2h; capacitor rigidly clamped by body to surface ▪ IEC 60068-2-6	

For further information please contact sales@capxon.org

STANDARD RATINGS

□□□ see terminal code at dimensions table

V_R (V)	C_R (µF)	ø D (mm)	L (mm)	Typ. ESR +20°C ▪ 120Hz (mΩ)	Max. ESR +20°C ▪ 120Hz (mΩ)	I_R ▪ Max. Ripple Current +85°C ▪ 120Hz (mA rms)	CapXon Part Number
160	1000	35	60	110	200	2800	RP102M160P600□□□
	1500	35	60	74	130	3100	RP152M160P600□□□
	2200	35	80	52	90	4200	RP222M160P800□□□
	2200	35	100	52	90	4700	RP222M160PA00□□□
	3300	35	100	34	60	5300	RP332M160PA00□□□
	3300	35	120	34	60	5800	RP332M160PA20□□□
	3900	51	75	29	51	5500	RP392M160R750□□□
	3900	51	80	29	51	5650	RP392M160R800□□□
	4700	51	75	24	42	5900	RP472M160R750□□□
	4700	51	80	24	42	6100	RP472M160R800□□□
	5600	51	96	20	36	7200	RP562M160R960□□□
	6800	51	96	17	29	8000	RP682M160R960□□□
	6800	51	100	17	29	8100	RP682M160RA00□□□
	6800	51	120	17	29	8800	RP682M160RA20□□□
	8200	51	115	14	24	9300	RP822M160RA15□□□
	8200	51	120	14	24	9500	RP822M160RA20□□□
	10000	51	140	11	20	10900	RP103M160RA40□□□
	10000	63.5	96	11	20	10500	RP103M160S960□□□
	10000	63.5	100	11	20	10700	RP103M160SA00□□□
	12000	63.5	96	10	17	11500	RP123M160S960□□□
	15000	63.5	120	8	13	14000	RP153M160SA20□□□
	15000	63.5	130	8	13	14500	RP153M160SA30□□□
	15000	76.2	100	8	13	14600	RP153M160TA00□□□
	18000	63.5	130	6	11	15700	RP183M160SA30□□□
	22000	76.2	120	5	9	17600	RP223M160TA20□□□
	22000	76.2	130	5	9	18300	RP223M160TA30□□□
	27000	76.2	130	4	7	20300	RP273M160TA30□□□
	33000	76.2	160	3	6	22000	RP333M160TA60□□□
	33000	89	130	3	6	23800	RP333M160XA30□□□
	33000	89	140	3	6	24600	RP333M160XA40□□□
	39000	89	157	3	6	28000	RP393M160XA57□□□
	47000	89	170	3	6	28200	RP473M160XA70□□□
	68000	89	230	3	5	28500	RP683M160XB30□□□
200	1000	35	60	110	200	3000	RP102M200P600□□□
	1500	35	80	74	130	3500	RP152M200P800□□□
	2200	35	100	52	90	4800	RP222M200PA00□□□
	2700	35	120	42	74	5500	RP272M200PA20□□□
	3300	35	120	34	60	5900	RP332M200PA20□□□
	3300	51	75	34	60	6000	RP332M200R750□□□
	3900	51	75	29	51	6200	RP392M200R750□□□
	4700	51	96	24	42	6400	RP472M200R960□□□
	4700	51	100	24	42	6500	RP472M200RA00□□□
	5600	51	115	20	36	7600	RP562M200RA15□□□
	6800	51	120	17	29	8700	RP682M200RA20□□□

For further information please contact sales@capxon.org

STANDARD RATINGS

□□□ see terminal code at dimensions table

V_R (V)	C_R (µF)	ø D (mm)	L (mm)	Typ. ESR +20°C ▪ 120Hz (mΩ)	Max. ESR +20°C ▪ 120Hz (mΩ)	I_R ▪ Max. Ripple Current +85°C ▪ 120Hz (mA rms)	CapXon Part Number
200	6800	51	130	17	29	9000	RP682M200RA30□□□
	8200	63.5	96	14	24	9500	RP822M200S960□□□
	8200	63.5	100	14	24	9700	RP822M200SA00□□□
	10000	63.5	96	11	20	10400	RP103M200S960□□□
	10000	63.5	120	11	20	11500	RP103M200SA20□□□
	12000	76.2	96	10	17	12100	RP123M200T960□□□
	15000	76.2	96	8	13	14600	RP153M200T960□□□
	15000	76.2	120	8	13	16000	RP153M200TA20□□□
	18000	76.2	130	6	11	16600	RP183M200TA30□□□
	22000	76.2	155	5	9	19800	RP223M200TA55□□□
	22000	89	120	5	9	19300	RP223M200XA20□□□
	27000	89	130	4	7	21500	RP273M200XA30□□□
	33000	89	157	3	6	25600	RP333M200XA57□□□
	47000	89	220	3	5	28300	RP473M200XB20□□□
250	680	35	60	170	290	2500	RP681M250P600□□□
	1000	35	80	110	200	3100	RP102M250P800□□□
	1500	35	80	74	130	3800	RP152M250P800□□□
	1800	35	100	63	110	3900	RP182M250PA00□□□
	2200	35	120	52	90	4900	RP222M250PA20□□□
	2200	51	75	52	90	4800	RP222M250R750□□□
	2700	51	75	42	74	4900	RP272M250R750□□□
	3300	51	96	34	60	6100	RP332M250R960□□□
	3300	51	100	34	60	6200	RP332M250RA00□□□
	3900	51	115	29	51	6500	RP392M250RA15□□□
	4700	51	120	24	42	8400	RP472M250RA20□□□
	4700	51	140	24	42	9100	RP472M250RA40□□□
	4700	63.5	96	24	42	8650	RP472M250S960□□□
	5600	63.5	96	20	36	9300	RP562M250S960□□□
	6800	51	140	17	29	9900	RP682M250RA40□□□
	6800	63.5	115	17	29	10200	RP682M250SA15□□□
	6800	76.2	100	17	29	10600	RP682M250TA00□□□
	8200	63.5	115	14	24	10900	RP822M250SA15□□□
	10000	63.5	130	11	20	11700	RP103M250SA30□□□
	10000	76.2	120	11	20	12500	RP103M250TA20□□□
	10000	76.2	140	11	20	13300	RP103M250TA40□□□
	12000	76.2	115	10	17	12800	RP123M250TA15□□□
	15000	76.2	130	8	13	15200	RP153M250TA30□□□
	15000	76.2	150	8	13	16200	RP153M250TA50□□□
	15000	89	120	8	13	16000	RP153M250XA20□□□
	18000	76.2	155	6	11	17800	RP183M250TA55□□□
	22000	89	157	5	9	21000	RP223M250XA57□□□
	33000	89	220	3	6	25700	RP333M250XB20□□□
	47000	100	240	3	5	28400	RP473M250DB40□□□

For further information please contact sales@capxon.org

STANDARD RATINGS

□□□ see terminal code at dimensions table

V_R (V)	C_R (µF)	ø D (mm)	L (mm)	Typ. ESR +20°C ▪ 120Hz (mΩ)	Max. ESR +20°C ▪ 120Hz (mΩ)	I_R ▪ Max. Ripple Current +85°C ▪ 120Hz (mA rms)	CapXon Part Number
350	390	35	50	290	510	1900	RP391M350P500□□□
	470	35	60	240	420	2100	RP471M350P600□□□
	470	35	65	240	420	2200	RP471M350P650□□□
	560	35	70	210	360	2300	RP561M350P700□□□
	680	35	80	170	290	2800	RP681M350P800□□□
	820	35	90	140	240	3000	RP821M350P900□□□
	1000	35	100	110	200	3600	RP102M350PA00□□□
	1000	51	65	110	200	3700	RP102M350R650□□□
	1200	35	120	97	170	3900	RP122M350PA20□□□
	1200	51	75	97	170	3900	RP122M350R750□□□
	1500	51	60	74	130	4400	RP152M350R600□□□
	1500	51	65	74	130	4500	RP152M350R650□□□
	1500	51	75	74	130	4800	RP152M350R750□□□
	1800	51	70	63	110	5800	RP182M350R700□□□
	1800	51	75	63	110	6000	RP182M350R750□□□
	1800	51	80	63	110	6100	RP182M350R800□□□
	1800	51	85	63	110	6300	RP182M350R850□□□
	2200	51	80	52	90	6700	RP222M350R800□□□
	2200	51	96	52	90	7300	RP222M350R960□□□
	2200	51	105	52	90	7600	RP222M350RA05□□□
	2200	51	120	52	90	8000	RP222M350RA20□□□
	2700	51	90	42	74	7800	RP272M350R900□□□
	2700	51	105	42	74	8400	RP272M350RA05□□□
	2700	51	115	42	74	8700	RP272M350RA15□□□
	2700	63.5	65	42	74	7700	RP272M350S650□□□
	2700	63.5	80	42	74	8400	RP272M350S800□□□
	2700	63.5	96	42	74	9100	RP272M350S960□□□
	3300	51	105	34	60	8500	RP332M350RA05□□□
	3300	51	120	34	60	9100	RP332M350RA20□□□
	3300	51	130	34	60	9400	RP332M350RA30□□□
	3300	63.5	75	34	60	8400	RP332M350S750□□□
	3300	63.5	85	34	60	8800	RP332M350S850□□□
	3300	63.5	96	34	60	9300	RP332M350S960□□□
	3300	63.5	115	34	60	10000	RP332M350SA15□□□
	3900	51	130	29	51	11300	RP392M350RA30□□□
	3900	63.5	80	29	51	10300	RP392M350S800□□□
	3900	63.5	96	29	51	11100	RP392M350S960□□□
	3900	63.5	105	29	51	11600	RP392M350SA05□□□
	3900	63.5	115	29	51	12000	RP392M350SA15□□□
	3900	76.2	100	29	51	12600	RP392M350TA00□□□
	4700	51	140	24	42	12900	RP472M350RA40□□□
	4700	63.5	90	24	42	12000	RP472M350S900□□□
	4700	63.5	115	24	42	13300	RP472M350SA15□□□
	4700	63.5	130	24	42	14000	RP472M350SA30□□□

For further information please contact sales@capxon.org

STANDARD RATINGS

□□□ see terminal code at dimensions table

V_R (V)	C_R (µF)	ø D (mm)	L (mm)	Typ. ESR +20°C ▪ 120Hz (mΩ)	Max. ESR +20°C ▪ 120Hz (mΩ)	I_R ▪ Max. Ripple Current +85°C ▪ 120Hz (mA rms)	CapXon Part Number
350	4700	76.2	70	24	42	12000	RP472M350T700□□□
	4700	76.2	96	24	42	13700	RP472M350T960□□□
	4700	76.2	100	24	42	13800	RP472M350TA00□□□
	5600	63.5	100	20	36	13500	RP562M350SA00□□□
	5600	63.5	130	20	36	15200	RP562M350SA30□□□
	5600	76.2	85	20	36	14100	RP562M350T850□□□
	5600	76.2	96	20	36	14800	RP562M350T960□□□
	5600	76.2	115	20	36	16000	RP562M350TA15□□□
	5600	76.2	125	20	36	16500	RP562M350TA25□□□
	5600	89	105	20	36	16800	RP562M350XA05□□□
	6800	63.5	125	17	29	15900	RP682M350SA25□□□
	6800	63.5	143	17	29	16900	RP682M350SA43□□□
	6800	76.2	95	17	29	15700	RP682M350T950□□□
	6800	76.2	115	17	29	17000	RP682M350TA15□□□
	6800	76.2	130	17	29	17900	RP682M350TA30□□□
	6800	76.2	140	17	29	18500	RP682M350TA40□□□
	6800	89	100	17	29	17500	RP682M350XA00□□□
	8200	63.5	145	14	24	18600	RP822M350SA45□□□
	8200	76.2	105	14	24	17900	RP822M350TA05□□□
	8200	76.2	130	14	24	19600	RP822M350TA30□□□
	8200	76.2	143	14	24	20400	RP822M350TA43□□□
	8200	76.2	155	14	24	21200	RP822M350TA55□□□
	10000	63.5	165	11	20	21800	RP103M350SA65□□□
	10000	76.2	125	11	20	21300	RP103M350TA25□□□
	10000	76.2	155	11	20	23400	RP103M350TA55□□□
	10000	76.2	170	11	20	24400	RP103M350TA70□□□
	10000	76.2	190	11	20	25600	RP103M350TA90□□□
	10000	89	95	11	20	20800	RP103M350X950□□□
	10000	89	120	11	20	22900	RP103M350XA20□□□
	10000	89	130	11	20	23700	RP103M350XA30□□□
	10000	89	157	11	20	25700	RP103M350XA57□□□
	12000	76.2	150	10	17	23500	RP123M350TA50□□□
	12000	76.2	180	10	17	25500	RP123M350TA80□□□
	12000	76.2	220	10	17	27900	RP123M350TB20□□□
	12000	89	110	10	17	22500	RP123M350XA10□□□
	12000	89	130	10	17	24100	RP123M350XA30□□□
	12000	89	145	10	17	25300	RP123M350XA45□□□
	12000	89	155	10	17	26000	RP123M350XA55□□□
	15000	76.2	190	8	13	29200	RP153M350TA90□□□
	15000	89	140	8	13	27800	RP153M350XA40□□□
	15000	89	155	8	13	29100	RP153M350XA55□□□
	15000	89	190	8	13	31800	RP153M350XA90□□□
	15000	89	219	8	13	34000	RP153M350XB19□□□
	18000	76.2	210	6	11	31000	RP183M350TB10□□□

For further information please contact sales@capxon.org

STANDARD RATINGS

□□□ see terminal code at dimensions table

V_R (V)	C_R (µF)	ø D (mm)	L (mm)	Typ. ESR +20°C ▪ 120Hz (mΩ)	Max. ESR +20°C ▪ 120Hz (mΩ)	I_R ▪ Max. Ripple Current +85°C ▪ 120Hz (mA rms)	CapXon Part Number
350	18000	89	155	6	11	29500	RP183M350XA55□□□
	18000	89	220	6	11	34500	RP183M350XB20□□□
	22000	89	190	5	9	32100	RP223M350XA90□□□
	22000	89	230	5	9	35400	RP223M350XB30□□□
	39000	100	240	3	5	42000	RP393M350DB40□□□
400	330	35	50	340	600	1800	RP331M400P500□□□
	390	35	60	290	510	2000	RP391M400P600□□□
	390	35	65	290	510	2100	RP391M400P650□□□
	470	35	70	240	420	2200	RP471M400P700□□□
	560	35	80	210	360	2800	RP561M400P800□□□
	680	35	90	170	290	2900	RP681M400P900□□□
	820	35	100	140	240	3500	RP821M400PA00□□□
	1000	35	120	110	200	4000	RP102M400PA20□□□
	1000	51	60	110	200	3600	RP102M400R600□□□
	1000	51	65	110	200	3800	RP102M400R650□□□
	1000	51	75	110	200	4000	RP102M400R750□□□
	1200	51	65	97	170	4600	RP122M400R650□□□
	1200	51	75	97	170	4900	RP122M400R750□□□
	1500	51	75	74	130	5400	RP152M400R750□□□
	1500	51	80	74	130	5600	RP152M400R800□□□
	1500	51	85	74	130	5700	RP152M400R850□□□
	1500	51	100	74	130	6100	RP152M400RA00□□□
	1500	51	105	74	130	6300	RP152M400RA05□□□
	1800	51	85	63	110	6300	RP182M400R850□□□
	1800	51	96	63	110	6600	RP182M400R960□□□
	1800	63.5	65	63	110	6400	RP182M400S650□□□
	2200	51	96	52	90	7400	RP222M400R960□□□
	2200	51	105	52	90	7700	RP222M400RA05□□□
	2200	51	120	52	90	8200	RP222M400RA20□□□
	2200	51	130	52	90	8500	RP222M400RA30□□□
	2200	63.5	75	52	90	7500	RP222M400S750□□□
	2200	63.5	96	52	90	8400	RP222M400S960□□□
	2700	51	115	42	74	8800	RP272M400RA15□□□
	2700	63.5	85	42	74	8700	RP272M400S850□□□
	2700	63.5	96	42	74	9200	RP272M400S960□□□
	2700	63.5	105	42	74	9600	RP272M400SA05□□□
	3300	51	130	34	60	10400	RP332M400RA30□□□
	3300	51	145	34	60	10900	RP332M400RA45□□□
	3300	63.5	95	34	60	10200	RP332M400S950□□□
	3300	63.5	100	34	60	10400	RP332M400SA00□□□
	3300	63.5	115	34	60	11100	RP332M400SA15□□□
	3300	63.5	120	34	60	11300	RP332M400SA20□□□
	3300	76.2	100	34	60	11600	RP332M400TA00□□□
	3900	51	170	29	51	12800	RP392M400RA70□□□

For further information please contact sales@capxon.org

STANDARD RATINGS

□□□ see terminal code at dimensions table

V_R (V)	C_R (µF)	ø D (mm)	L (mm)	Typ. ESR +20°C ▪ 120Hz (mΩ)	Max. ESR +20°C ▪ 120Hz (mΩ)	I_R ▪ Max. Ripple Current +85°C ▪ 120Hz (mA rms)	CapXon Part Number
400	3900	63.5	105	29	51	11600	RP392M400SA05□□□
	3900	63.5	115	29	51	12100	RP392M400SA15□□□
	3900	63.5	130	29	51	12800	RP392M400SA30□□□
	3900	76.2	85	29	51	11800	RP392M400T850□□□
	3900	76.2	96	29	51	12400	RP392M400T960□□□
	3900	76.2	105	29	51	12900	RP392M400TA05□□□
	4700	63.5	125	24	42	13900	RP472M400SA25□□□
	4700	63.5	130	24	42	14100	RP472M400SA30□□□
	4700	76.2	95	24	42	13700	RP472M400T950□□□
	4700	76.2	100	24	42	14000	RP472M400TA00□□□
	4700	76.2	105	24	42	14200	RP472M400TA05□□□
	4700	76.2	115	24	42	14800	RP472M400TA15□□□
	4700	76.2	120	24	42	15100	RP472M400TA20□□□
	5600	63.5	140	20	36	15800	RP562M400SA40□□□
	5600	63.5	155	20	36	16500	RP562M400SA55□□□
	5600	76.2	105	20	36	16700	RP562M400TA05□□□
	5600	76.2	130	20	36	18300	RP562M400TA30□□□
	6800	63.5	165	17	29	17500	RP682M400SA65□□□
	6800	76.2	115	17	29	17100	RP682M400TA15□□□
	6800	76.2	130	17	29	17400	RP682M400TA30□□□
	6800	76.2	140	17	29	18000	RP682M400TA40□□□
	6800	76.2	155	17	29	18800	RP682M400TA55□□□
	6800	89	157	17	29	20600	RP682M400XA57□□□
	8200	63.5	210	14	24	22200	RP822M400SB10□□□
	8200	76.2	150	14	24	21000	RP822M400TA50□□□
	8200	76.2	155	14	24	21300	RP822M400TA55□□□
	8200	89	120	14	24	20800	RP822M400XA20□□□
	8200	89	130	14	24	21500	RP822M400XA30□□□
	8200	89	157	14	24	23400	RP822M400XA57□□□
	10000	76.2	160	11	20	23900	RP103M400TA60□□□
	10000	76.2	170	11	20	24500	RP103M400TA70□□□
	10000	76.2	190	11	20	25800	RP103M400TA90□□□
	10000	89	130	11	20	23800	RP103M400XA30□□□
	10000	89	155	11	20	25700	RP103M400XA55□□□
	12000	76.2	220	10	17	28000	RP123M400TB20□□□
	12000	89	155	10	17	26100	RP123M400XA55□□□
	12000	89	190	10	17	28600	RP123M400XA90□□□
	12000	89	219	10	17	30500	RP123M400XB19□□□
	15000	76.2	230	8	13	31900	RP153M400TB30□□□
	15000	89	180	8	13	31100	RP153M400XA80□□□
	15000	89	220	8	13	34000	RP153M400XB20□□□
	18000	89	230	6	11	34600	RP183M400XB30□□□
	22000	100	240	5	9	36000	RP223M400DB40□□□

For further information please contact sales@capxon.org

STANDARD RATINGS

□□□ see terminal code at dimensions table

V_R (V)	C_R (µF)	ø D (mm)	L (mm)	Typ. ESR +20°C ▪ 120Hz (mΩ)	Max. ESR +20°C ▪ 120Hz (mΩ)	I_R ▪ Max. Ripple Current +85°C ▪ 120Hz (mA rms)	CapXon Part Number
450	270	35	50	420	740	1700	RP271M450P500□□□
	330	35	60	340	600	1800	RP331M450P600□□□
	330	35	65	340	600	1900	RP331M450P650□□□
	390	35	70	290	510	2100	RP391M450P700□□□
	390	35	80	290	510	2200	RP391M450P800□□□
	470	35	80	240	420	2400	RP471M450P800□□□
	560	35	90	210	360	2900	RP561M450P900□□□
	680	35	100	170	290	3100	RP681M450PA00□□□
	820	35	120	140	240	3600	RP821M450PA20□□□
	820	51	60	140	240	3300	RP821M450R600□□□
	820	51	75	140	240	3600	RP821M450R750□□□
	1000	51	70	110	200	4340	RP102M450R700□□□
	1000	51	75	110	200	4470	RP102M450R750□□□
	1000	51	80	110	200	4600	RP102M450R800□□□
	1200	51	75	97	170	5000	RP122M450R750□□□
	1200	51	96	97	170	5600	RP122M450R960□□□
	1500	51	85	74	130	5800	RP152M450R850□□□
	1500	51	105	74	130	6400	RP152M450RA05□□□
	1500	51	115	74	130	6700	RP152M450RA15□□□
	1500	51	120	74	130	6800	RP152M450RA20□□□
	1500	63.5	65	74	130	5900	RP152M450S650□□□
	1500	63.5	80	74	130	6400	RP152M450S800□□□
	1800	51	95	63	110	6600	RP182M450R950□□□
	1800	51	118	63	110	7300	RP182M450RA18□□□
	1800	51	130	63	110	7600	RP182M450RA30□□□
	1800	63.5	75	63	110	6800	RP182M450S750□□□
	1800	63.5	96	63	110	7500	RP182M450S960□□□
	2200	51	125	52	90	8400	RP222M450RA25□□□
	2200	51	130	52	90	8600	RP222M450RA30□□□
	2200	63.5	85	52	90	8100	RP222M450S850□□□
	2200	63.5	96	52	90	8500	RP222M450S960□□□
	2200	63.5	100	52	90	8600	RP222M450SA00□□□
	2200	63.5	120	52	90	9400	RP222M450SA20□□□
	2700	51	145	42	74	9900	RP272M450RA45□□□
	2700	63.5	90	42	74	9000	RP272M450S900□□□
	2700	63.5	96	42	74	9300	RP272M450S960□□□
	2700	63.5	115	42	74	10100	RP272M450SA15□□□
	2700	76.2	96	42	74	10300	RP272M450T960□□□
	3300	51	170	34	60	11900	RP332M450RA70□□□
	3300	63.5	105	34	60	10800	RP332M450SA05□□□
	3300	63.5	115	34	60	11200	RP332M450SA15□□□
	3300	63.5	130	34	60	11800	RP332M450SA30□□□
	3300	76.2	85	34	60	10900	RP332M450T850□□□
	3300	76.2	96	34	60	11500	RP332M450T960□□□

For further information please contact sales@capxon.org

STANDARD RATINGS

□□□ see terminal code at dimensions table

V_R (V)	C_R (µF)	ø D (mm)	L (mm)	Typ. ESR +20°C ▪ 120Hz (mΩ)	Max. ESR +20°C ▪ 120Hz (mΩ)	I_R ▪ Max. Ripple Current +85°C ▪ 120Hz (mA rms)	CapXon Part Number
450	3300	76.2	100	34	60	11700	RP332M450TA00□□□
	3300	76.2	120	34	60	12600	RP332M450TA20□□□
	3900	63.5	125	29	51	12700	RP392M450SA25□□□
	3900	63.5	130	29	51	12900	RP392M450SA30□□□
	3900	76.2	95	29	51	12500	RP392M450T950□□□
	3900	76.2	100	29	51	12800	RP392M450TA00□□□
	3900	76.2	115	29	51	13500	RP392M450TA15□□□
	4700	63.5	145	24	42	14900	RP472M450SA45□□□
	4700	63.5	155	24	42	15400	RP472M450SA55□□□
	4700	76.2	105	24	42	14400	RP472M450TA05□□□
	4700	76.2	115	24	42	14900	RP472M450TA15□□□
	4700	76.2	120	24	42	15200	RP472M450TA20□□□
	4700	76.2	130	24	42	15700	RP472M450TA30□□□
	4700	76.2	160	24	42	17200	RP472M450TA60□□□
	4700	89	119	24	42	16600	RP472M450XA19□□□
	5600	63.5	165	20	36	18500	RP562M450SA65□□□
	5600	76.2	125	20	36	18100	RP562M450TA25□□□
	5600	76.2	130	20	36	18400	RP562M450TA30□□□
	5600	76.2	155	20	36	19900	RP562M450TA55□□□
	5600	89	134	20	36	20400	RP562M450XA34□□□
	6800	63.5	210	17	29	19600	RP682M450SB10□□□
	6800	76.2	140	17	29	18000	RP682M450TA40□□□
	6800	76.2	150	17	29	18600	RP682M450TA50□□□
	6800	89	120	17	29	18400	RP682M450XA20□□□
	6800	89	130	17	29	19100	RP682M450XA30□□□
	6800	89	157	17	29	20700	RP682M450XA57□□□
	8200	76.2	170	13	24	22300	RP822M450TA70□□□
	8200	76.2	220	13	24	25000	RP822M450TB20□□□
	8200	89	130	13	24	21600	RP822M450XA30□□□
	8200	89	155	13	24	23400	RP822M450XA55□□□
	10000	76.2	210	11	20	27100	RP103M450TB10□□□
	10000	76.2	215	11	20	27400	RP103M450TB15□□□
	10000	76.2	220	11	20	27700	RP103M450TB20□□□
	10000	89	155	11	20	25800	RP103M450XA55□□□
	10000	89	170	11	20	26900	RP103M450XA70□□□
	12000	89	190	10	17	28700	RP123M450XA90□□□
	12000	89	220	10	17	30600	RP123M450XB20□□□
	15000	89	220	8	13	34100	RP153M450XB20□□□
500	120	35	50	1260	2210	800	RP121M500P500□□□
	270	35	80	560	980	1300	RP271M500P800□□□
	330	35	100	460	800	1500	RP331M500PA00□□□
	390	35	120	390	680	1800	RP391M500PA20□□□
	470	51	60	320	560	2200	RP471M500R600□□□
	470	51	75	320	560	2400	RP471M500R750□□□

For further information please contact sales@capxon.org

STANDARD RATINGS

□□□ see terminal code at dimensions table

V_R (V)	C_R (µF)	ø D (mm)	L (mm)	Typ. ESR +20°C ▪ 120Hz (mΩ)	Max. ESR +20°C ▪ 120Hz (mΩ)	I_R ▪ Max. Ripple Current +85°C ▪ 120Hz (mA rms)	CapXon Part Number
500	680	51	65	220	390	2800	RP681M500R650□□□
	680	51	96	220	390	3300	RP681M500R960□□□
	820	51	75	180	320	3200	RP821M500R750□□□
	820	51	115	180	320	3900	RP821M500RA15□□□
	1000	51	85	150	270	3700	RP102M500R850□□□
	1000	51	130	150	270	4500	RP102M500RA30□□□
	1000	63.5	96	150	270	4400	RP102M500S960□□□
	1200	51	96	130	220	4300	RP122M500R960□□□
	1500	51	115	100	180	5200	RP152M500RA15□□□
	1500	63.5	96	100	180	5400	RP152M500S960□□□
	1500	63.5	115	100	180	5900	RP152M500SA15□□□
	1500	76.2	96	100	180	6000	RP152M500T960□□□
	1800	51	130	86	150	6000	RP182M500RA30□□□
	1800	63.5	96	86	150	5900	RP182M500S960□□□
	1800	63.5	130	86	150	6800	RP182M500SA30□□□
	2200	63.5	115	69	120	7100	RP222M500SA15□□□
	2200	76.2	96	69	120	7300	RP222M500T960□□□
	2200	76.2	115	69	120	7900	RP222M500TA15□□□
	2700	63.5	130	56	98	8600	RP272M500SA30□□□
	2700	76.2	155	56	98	10300	RP272M500TA55□□□
	3300	76.2	115	46	80	10100	RP332M500TA15□□□
	3900	76.2	130	39	68	11500	RP392M500TA30□□□
	3900	89	155	39	68	13600	RP392M500XA55□□□
	4700	76.2	155	32	56	13400	RP472M500TA55□□□
	5600	89	157	27	47	14800	RP562M500XA57□□□
	6800	89	155	22	39	16000	RP682M500XA55□□□
	8200	89	196	18	32	18200	RP822M500XA96□□□
	10000	89	220	15	27	22300	RP103M500XB20□□□
550	100	35	50	1510	2650	700	RP101M550P500□□□
	180	35	80	840	1470	1100	RP181M550P800□□□
	270	35	100	560	980	1400	RP271M550PA00□□□
	330	35	120	460	800	1700	RP331M550PA20□□□
	390	51	60	390	680	2000	RP391M550R600□□□
	390	51	75	390	680	2200	RP391M550R750□□□
	560	51	65	270	470	2500	RP561M550R650□□□
	560	51	96	270	470	3000	RP561M550R960□□□
	560	63.5	96	270	470	3300	RP561M550S960□□□
	680	51	75	220	390	2900	RP681M550R750□□□
	680	51	96	220	390	3300	RP681M550R960□□□
	680	51	115	220	390	3600	RP681M550RA15□□□
	680	63.5	115	220	390	4000	RP681M550SA15□□□
	820	51	80	180	320	3400	RP821M550R800□□□
	820	51	85	180	320	3500	RP821M550R850□□□
	820	51	96	180	320	3700	RP821M550R960□□□

For further information please contact sales@capxon.org

STANDARD RATINGS

□□□ see terminal code at dimensions table

V_R (V)	C_R (µF)	ø D (mm)	L (mm)	Typ. ESR +20°C ▪ 120Hz (mΩ)	Max. ESR +20°C ▪ 120Hz (mΩ)	I_R ▪ Max. Ripple Current +85°C ▪ 120Hz (mA rms)	CapXon Part Number
550	820	51	130	180	320	4200	RP821M550RA30□□□
	820	63.5	130	180	320	4800	RP821M550SA30□□□
	1000	51	96	150	270	4900	RP102M550R960□□□
	1000	51	105	150	270	5100	RP102M550RA05□□□
	1200	51	105	130	220	5800	RP122M550RA05□□□
	1200	51	115	130	220	6000	RP122M550RA15□□□
	1200	63.5	80	130	220	5800	RP122M550S800□□□
	1200	76.2	96	130	220	7000	RP122M550T960□□□
	1500	51	130	100	180	7400	RP152M550RA30□□□
	1500	63.5	96	100	180	7300	RP152M550S960□□□
	1500	76.2	115	100	180	8800	RP152M550TA15□□□
	1800	63.5	96	86	150	8300	RP182M550S960□□□
	1800	63.5	118	86	150	9100	RP182M550SA18□□□
	1800	76.2	80	86	150	8600	RP182M550T800□□□
	1800	76.2	96	86	150	9200	RP182M550T960□□□
	1800	76.2	130	86	150	10500	RP182M550TA30□□□
	2200	63.5	118	69	120	9400	RP222M550SA18□□□
	2200	63.5	130	69	120	9800	RP222M550SA30□□□
	2200	76.2	96	69	120	9500	RP222M550T960□□□
	2200	76.2	105	69	120	9900	RP222M550TA05□□□
	2200	76.2	155	69	120	11700	RP222M550TA55□□□
	2700	63.5	130	56	98	10800	RP272M550SA30□□□
	2700	76.2	105	56	98	10900	RP272M550TA05□□□
	2700	76.2	115	56	98	11300	RP272M550TA15□□□
	2700	76.2	130	56	98	12000	RP272M550TA30□□□
	3300	76.2	118	46	80	12100	RP332M550TA18□□□
	3300	76.2	130	46	80	12600	RP332M550TA30□□□
	3300	76.2	143	46	80	13200	RP332M550TA43□□□
	3900	76.2	143	39	68	14200	RP392M550TA43□□□
	3900	89	120	39	68	14400	RP392M550XA20□□□
	4700	76.2	155	32	56	16200	RP472M550TA55□□□
	4700	89	145	32	56	17200	RP472M550XA45□□□
	4700	89	157	32	56	17800	RP472M550XA57□□□
	5600	76.2	190	27	47	18800	RP562M550TA90□□□
	5600	89	145	27	47	18200	RP562M550XA45□□□
	5600	89	155	27	47	18700	RP562M550XA55□□□
	6800	76.2	220	22	39	21800	RP682M550TB20□□□
	6800	89	170	22	39	21100	RP682M550XA70□□□
	8200	89	197	18	32	25300	RP822M550XA97□□□

For further information please contact sales@capxon.org

STANDARD RATINGS

□□□ see terminal code at dimensions table

V_R (V)	C_R (µF)	ø D (mm)	L (mm)	Typ. ESR +20°C ▪ 120Hz (mΩ)	Max. ESR +20°C ▪ 120Hz (mΩ)	Max. Ripple Current +85°C ▪ 120Hz (mA rms)	CapXon Part Number
630	1000	63.5	130	190	330	6000	RP102M630SA30□□□
	1200	76.2	110	160	280	6800	RP122M630TA10□□□
	1500	76.2	130	130	220	8200	RP152M630TA30□□□
	1800	76.2	150	100	180	9700	RP182M630TA50□□□
	2200	89	130	86	150	10800	RP222M630XA30□□□
	2700	89	150	69	120	12700	RP272M630XA50□□□
	3300	89	170	57	100	14800	RP332M630XA70□□□
	3900	89	190	49	85	17400	RP392M630XA90□□□
	4700	100	220	40	71	21500	RP472M630DB20□□□
	5600	100	240	34	59	24800	RP562M630DB40□□□

DIMENSIONS ▪ Ring clamp mounting ▪ All dimensions in mm

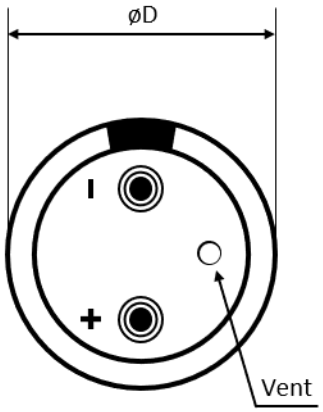

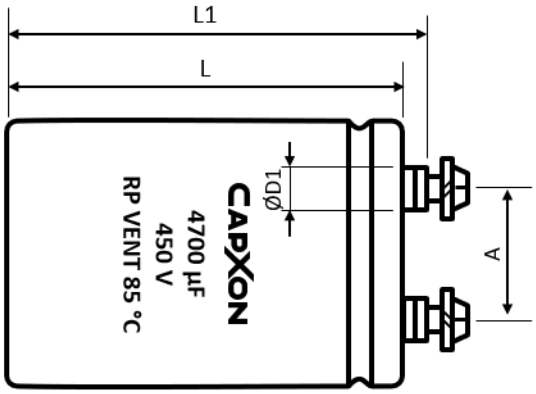

Terminal	Dimensions (mm) with insulating sleeve					Min. Full Thread (mm)	Max. Torque (Nm)	Terminal code
	D ± 2	L ± 3	L1 ± 3	D1 max.	A ± 0.5			
M5	35	50 ~ 120	56.5 ~ 126.5	8.3	12.7	8	2	A50
M5	51	50 ~ 140	56.5 ~ 146.5	10.3	22	8	2	A50
M5	63.5	80 ~ 140	86.5 ~ 146.5	10.3	28.6	8	2	A50
M5	63.5	80 ~ 140	86.5 ~ 146.5	13	28.6	8	2	A53
M5	76.2	100 ~ 240	106.5 ~ 246.5	10.3	31.8	12	2.5	A50
M5	76.2	100 ~ 240	106.5 ~ 246.5	13	31.8	12	2.5	A53
M6	76.2	100 ~ 240	106.5 ~ 246.5	13	31.8	12	2.5	A63
M6	76.2	100 ~ 240	106.5 ~ 246.5	17.5	31.8	12	2.5	A67
M6	89	100 ~ 240	106.5 ~ 246.5	13	31.8	12	2.5	A63
M6	89	100 ~ 240	106.5 ~ 246.5	17.5	31.8	12	2.5	A67
M8	100	100 ~ 240	110 ~ 250	17.5	41.5	16	5	A87

For further information please contact sales@capxon.org

DIMENSIONS ▪ Threaded stud mounting ▪ All dimensions in mm

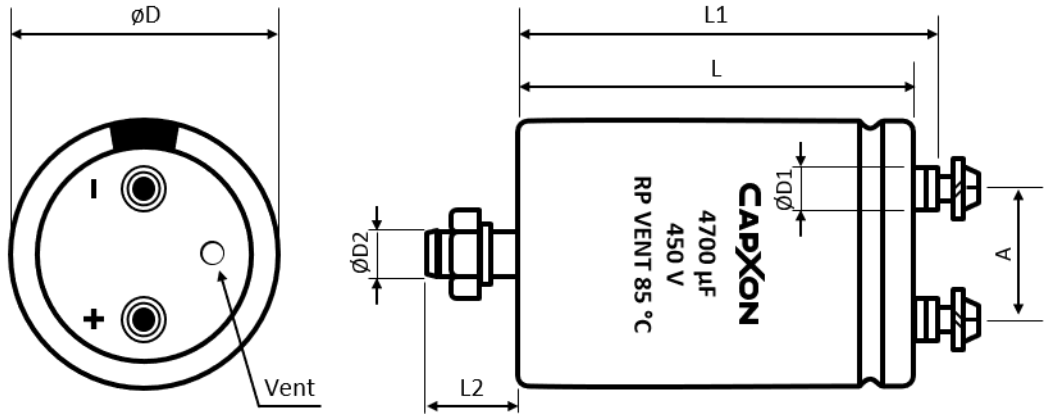

Terminal	Dimensions (mm) with insulating sleeve							Min. Full Thread (mm)	Max. Torque (Nm)	Terminal code
	D ± 2	L ± 3	L1 ± 3	L2 ± 1	D1 max.	D2	A ± 0.5			
M5	35	50 ~ 120	56.5 ~ 126.5	12	8.3	M8	12.7	8	2	E50
M5	51	50 ~ 140	56.5 ~ 146.5	16	10.3	M12	22	8	2	E50
M5	63.5	80 ~ 140	86.5 ~ 146.5	16	10.3	M12	28.6	8	2	E50
M5	63.5	80 ~ 140	86.5 ~ 146.5	16	13	M12	28.6	8	2	E53
M5	76.2	100 ~ 240	106.5 ~ 246.5	16	10.3	M12	31.8	12	2.5	E50
M5	76.2	100 ~ 240	106.5 ~ 246.5	16	13	M12	31.8	12	2.5	E53
M6	76.2	100 ~ 240	106.5 ~ 246.5	16	13	M12	31.8	12	2.5	E63
M6	76.2	100 ~ 240	106.5 ~ 246.5	16	17.5	M12	31.8	12	2.5	E67
M6	89	100 ~ 240	106.5 ~ 246.5	16	13	M12	31.8	12	2.5	E63
M6	89	100 ~ 240	106.5 ~ 246.5	16	17.5	M12	31.8	12	2.5	E67
M8	100	100 ~ 240	110 ~ 250	16	17.5	M12	41.5	16	5	E87

ACCESSORIES

- The capacitors are supplied with suitable screws, serrated washers and plain washers. Accessories are not fastened to the capacitor.
- Suitable ring clamps and further assembly material see additional information “Accessories”.

MULTIPLIER K_f for RIPPLE CURRENT vs. FREQUENCY

Frequency (Hz)	50/60	100/120	300	1k	≥ 3k
K_f	0.8	1	1.2	1.3	1.4

For further information please contact sales@capxon.org

PRECAUTIONS, GUIDELINES AND PACKAGING INFORMATON

Unless otherwise agreed in individual specifications, all products are subject to our “General Precautions and Guidelines” as well as our “Packaging Information”. Please refer to the following pages in the table.

General Precautions and Guidelines	Packaging Information Liquid Screw
Page 837	Page 681

USEFUL LIFE

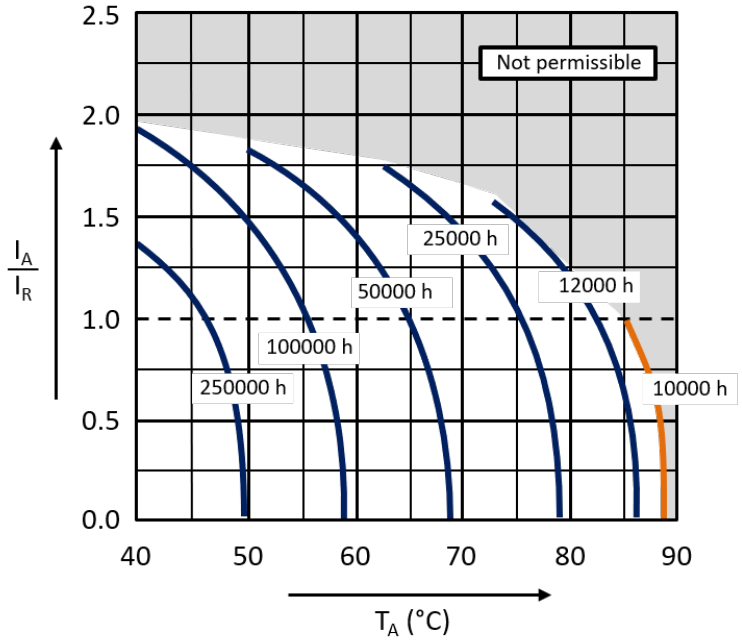

With: I_A: Actual application current
I_R: Maximum permissible rated ripple current (A RMS)
T_A: Ambient temperature of the capacitor

DISCLAIMER
All product related data (e.g. specification, statements and general information) are subject to change without any notice. It is necessary that the customer observes all product related technical / application information and handling instructions.

CapXon products are designed and manufactured according to severe quality and safety standards. Under no circumstance, CapXon warrants that any CapXon product is suitable for the purposes intended for your application, even CapXon knows the application. It is customer's duty and obligation to check and make sure that CapXon products are suitable for the purposes intended and select the correct and proper CapXon product. Customers are requested to perform a sufficient validation and reliability evaluation to assure needed safety level and reliability performance by suitable designs and to apply proper safeguards (e.g. redundancies, protective circuits).

Particular operating conditions (ambient temperature, ripple current, voltage, thermal resistance, etc.) as well as storage, production or assembly may affect the performance and the lifetime of the capacitor. Please consult CapXon for lifetime estimation, failure mode considerations or worst-case scenarios according to the product technology, product tolerances / deviations or change of the characteristics of the capacitor due to shipment, storage, handling, production and usage.

For aerospace or military application, life-saving, life-sustaining, safety critical applications or any application where failure may cause severe personal injury or death, please consult us before design-in the capacitor in your application.

Except for the written expressed warranties, CapXon does not impliedly, by assumption or whatever else, warrant, undertake, promise any other warranty or guaranty for any CapXon product.

For further information, please visit our website www.capxongroup.com or contact CapXon directly.

RX SERIES ▪ ULTRA LONG LIFE 85°C TYPE



KEY FEATURES

HIGH VOLTAGE LONG LIFE

- **ALUMINUM ELECTROLYTIC CAPACITOR** ▪ Screw terminal type
- Useful life: 85°C ▪ 20000 hours
- Wide capacitance range
- All-welded construction ensures highest reliability
- Bottom cooling possible due to the thermal construction

SPECIFICATIONS

Items		Performance Characteristics			
Operating Temperature Range		-40 ~ +85°C		-25 ~ +85°C	
Rated Voltage Range	V_R	160 ~ 450V DC		500 ~ 650V DC	
Surge Voltage	V_S	($V_R \le 315V$): $V_S = 1.15 \cdot V_R$		($V_R > 315V$): $V_S = 1.10 \cdot V_R$	
Capacitance Range	C_R	220 ~ 100000µF		1000 ~ 15000µF	
Cap. Tolerance	ΔC	±20% (120Hz ▪ 20°C)			
Leakage Current (20°C ▪ V_R applied)	I_{LEAK}	$\le 0.018 \cdot (C_R \cdot V_R)^{0.85} + 4$ (µA) or 5mA (whichever is smaller) ▪ After 5 minutes [I_{LEAK} (µA) ; C_R (µF) ; V_R (V)]			
Dissipation Factor % (20°C ▪ 120Hz)	tanδ	V_R (V DC)	160 ~ 450	500 ~ 550	≥ 600
		tanδ	15	20	25
Low Temperature Characteristics at 120Hz	Z ratio max.	V_R (V DC)	160 ~ 450	≥ 500	
		Z-25°C/Z+20°C	4	4	
		Z-40°C/Z+20°C	10	-	

Lifetime Test		
Useful Life 85°C (V_R & I_R applied)	Test	**20000 hours**
	$\triangle C/C_R$	≤ ±15% of initial measured value
	tanδ	≤ 175% of initial specified value
	I_{Leak}	≤ the initial specified value
	Deviation Rate @ Useful Life: 10 000 FIT = 1%/1000h with 60% confidence level ▪ parts show higher drift as test criteria	
Endurance 85°C (V_R & I_R applied)	Test	**5000 hours**
	$\triangle C/C_R$	≤ ±10% of initial measured value
	tanδ	≤ 150% of initial specified value
	I_{Leak}	≤ the initial specified value
Shelf Life 85°C (V_R = 0)	Test	**1000 hours**
	$\triangle C/C_R$	≤ ±10% of initial measured value
	tanδ	≤ 150% of initial specified value
	I_{Leak}	≤ the initial specified value
	Before measurement: Restore capacitor to 20°C, apply V_R for 30 min according JIS-C-5101-4	
Vibration Resistance Test	Max. 10g force, f_{RANGE} 10Hz … 55Hz, amplitude 0.75mm; X/Y/Z-axis each 2h; capacitor rigidly clamped by body to surface ▪ IEC 60068-2-6	

For further information please contact sales@capxon.org

STANDARD RATINGS

□□□ see terminal code at dimensions table

V_R (V)	C_R (µF)	ø D (mm)	L (mm)	Typ. ESR +20°C ▪ 120Hz (mΩ)	Max. ESR +20°C ▪ 120Hz (mΩ)	I_R ▪ Max. Ripple Current +85°C ▪ 120Hz (mA rms)	CapXon Part Number
160	1000	35	60	110	200	2500	RX102M160P600□□□
	1500	35	80	68	130	3300	RX152M160P800□□□
	2200	35	80	48	90	3450	RX222M160P800□□□
	2200	35	100	48	90	3500	RX222M160PA00□□□
	3300	35	120	32	60	4720	RX332M160PA20□□□
	3300	51	80	32	60	4800	RX332M160R800□□□
	4700	51	80	22	42	5100	RX472M160R800□□□
	4700	51	100	22	42	6000	RX472M160RA00□□□
	6800	51	100	15	29	6400	RX682M160RA00□□□
	6800	51	140	15	29	7000	RX682M160RA40□□□
	6800	63.5	100	15	29	7000	RX682M160SA00□□□
	10000	63.5	100	10	20	9110	RX103M160SA00□□□
	10000	63.5	120	10	20	10000	RX103M160SA20□□□
	15000	76.2	100	7	13	12100	RX153M160TA00□□□
	15000	76.2	120	7	13	13000	RX153M160TA20□□□
	22000	76.2	140	6	11	17000	RX223M160TA40□□□
	22000	89	130	6	11	18000	RX223M160XA30□□□
	33000	89	140	5	9	19300	RX333M160XA40□□□
	47000	89	170	4	7	20700	RX473M160XA70□□□
	47000	89	220	4	7	23000	RX473M160XB20□□□
	68000	89	220	4	6	23200	RX683M160XB20□□□
	100000	100	250	3	5	24500	RX104M160DB50□□□
200	680	35	50	150	290	1900	RX681M200P500□□□
	1000	35	60	110	200	2600	RX102M200P600□□□
	1500	35	80	68	130	3400	RX152M200P800□□□
	2200	35	100	48	90	3600	RX222M200PA00□□□
	2200	35	120	48	90	4000	RX222M200PA20□□□
	2200	51	80	48	90	4000	RX222M200R800□□□
	3300	51	80	32	60	4820	RX332M200R800□□□
	3300	51	100	32	60	5000	RX332M200RA00□□□
	4700	51	140	22	42	6500	RX472M200RA40□□□
	4700	63.5	100	22	42	6480	RX472M200SA00□□□
	6800	51	140	15	29	7400	RX682M200RA40□□□
	6800	63.5	120	15	29	8000	RX682M200SA20□□□
	10000	63.5	120	10	20	10300	RX103M200SA20□□□
	10000	76.2	120	10	20	13100	RX103M200TA20□□□
	15000	76.2	120	7	13	13400	RX153M200TA20□□□
	15000	76.2	140	7	13	15000	RX153M200TA40□□□
	15000	76.2	160	7	13	16100	RX153M200TA60□□□
	22000	76.2	160	6	9	17400	RX223M200TA60□□□
	22000	89	140	6	9	17800	RX223M200XA40□□□
	33000	89	170	4	7	19550	RX333M200XA70□□□
	47000	89	220	3	6	21000	RX473M200XB20□□□
	68000	100	250	3	5	22700	RX683M200DB50□□□

For further information please contact sales@capxon.org

STANDARD RATINGS

□□□ see terminal code at dimensions table

V_R (V)	C_R (µF)	ø D (mm)	L (mm)	Typ. ESR +20°C ▪ 120Hz (mΩ)	Max. ESR +20°C ▪ 120Hz (mΩ)	I_R ▪ Max. Ripple Current +85°C ▪ 120Hz (mA rms)	CapXon Part Number
250	470	35	60	220	420	2700	RX471M250P600□□□
	680	35	80	150	290	2800	RX681M250P800□□□
	1000	35	80	110	200	2980	RX102M250P800□□□
	1000	35	100	110	200	3300	RX102M250PA00□□□
	1500	35	100	68	130	3600	RX152M250PA00□□□
	1500	51	80	68	130	3700	RX152M250R800□□□
	2200	51	80	48	90	4100	RX222M250R800□□□
	2200	51	100	48	90	5500	RX222M250RA00□□□
	3300	51	100	32	60	5500	RX332M250RA00□□□
	3300	51	140	32	60	6000	RX332M250RA40□□□
	3300	63.5	100	32	60	6000	RX332M250SA00□□□
	4700	63.5	100	22	42	7350	RX472M250SA00□□□
	4700	63.5	120	22	42	8000	RX472M250SA20□□□
	6800	63.5	120	15	29	8950	RX682M250SA20□□□
	6800	76.2	120	15	29	10000	RX682M250TA20□□□
	10000	76.2	120	10	20	13300	RX103M250TA20□□□
	10000	76.2	160	10	20	14000	RX103M250TA60□□□
	10000	89	140	10	20	14000	RX103M250XA40□□□
	15000	89	140	7	13	16500	RX153M250XA40□□□
	15000	89	170	7	13	18000	RX153M250XA70□□□
	22000	89	170	5	9	18300	RX223M250XA70□□□
	22000	89	220	5	9	22400	RX223M250XB20□□□
	33000	89	220	3	6	22500	RX333M250XB20□□□
	47000	100	250	3	5	28500	RX473M250DB50□□□
350	330	35	60	320	600	2100	RX331M350P600□□□
	470	35	80	220	420	3000	RX471M350P800□□□
	680	35	100	150	290	3800	RX681M350PA00□□□
	820	35	80	130	240	4100	RX821M350P800□□□
	1000	35	100	110	200	4500	RX102M350PA00□□□
	1000	51	60	110	200	4000	RX102M350R600□□□
	1000	51	80	110	200	5700	RX102M350R800□□□
	1200	51	60	89	170	4950	RX122M350R600□□□
	1200	51	83	89	170	5800	RX122M350R830□□□
	1500	51	75	68	130	6000	RX152M350R750□□□
	1500	51	100	68	130	7000	RX152M350RA00□□□
	1800	51	75	58	110	6800	RX182M350R750□□□
	1800	51	90	58	110	7350	RX182M350R900□□□
	1800	63.5	96	58	110	8500	RX182M350S960□□□
	2200	51	105	48	90	8500	RX222M350RA05□□□
	2200	51	120	48	90	9000	RX222M350RA20□□□
	2700	51	105	39	74	9400	RX272M350RA05□□□
	2700	51	115	39	74	10600	RX272M350RA15□□□
	2700	63.5	80	39	74	9800	RX272M350S800□□□
	2700	63.5	85	39	74	10100	RX272M350S850□□□

STANDARD RATINGS

□□□ see terminal code at dimensions table

V_R (V)	C_R (µF)	ø D (mm)	L (mm)	Typ. ESR +20°C ▪ 120Hz (mΩ)	Max. ESR +20°C ▪ 120Hz (mΩ)	I_R ▪ Max. Ripple Current +85°C ▪ 120Hz (mA rms)	CapXon Part Number
350	3300	51	115	32	60	10800	RX332M350RA15□□□
	3300	51	130	32	60	12500	RX332M350RA30□□□
	3300	63.5	90	32	60	12000	RX332M350S900□□□
	3300	63.5	100	32	60	12500	RX332M350SA00□□□
	3900	63.5	100	27	51	13000	RX392M350SA00□□□
	3900	63.5	115	27	51	13900	RX392M350SA15□□□
	3900	76.2	80	27	51	13000	RX392M350T800□□□
	4700	63.5	105	22	42	14000	RX472M350SA05□□□
	4700	63.5	115	22	42	14500	RX472M350SA15□□□
	4700	76.2	90	22	42	14000	RX472M350T900□□□
	4700	76.2	120	22	42	16000	RX472M350TA20□□□
	5600	63.5	130	19	36	17400	RX562M350SA30□□□
	5600	63.5	150	19	36	19000	RX562M350SA50□□□
	5600	76.2	100	19	36	16800	RX562M350TA00□□□
	5600	76.2	115	19	36	18000	RX562M350TA15□□□
	6800	63.5	140	15	29	19000	RX682M350SA40□□□
	6800	63.5	155	15	29	19600	RX682M350SA55□□□
	6800	76.2	105	15	29	19000	RX682M350TA05□□□
	6800	76.2	115	15	29	20000	RX682M350TA15□□□
	6800	89	100	15	29	20000	RX682M350XA00□□□
	8200	63.5	170	13	24	20700	RX822M350SA70□□□
	8200	63.5	190	13	24	22000	RX822M350SA90□□□
	8200	76.2	120	13	24	20000	RX822M350TA20□□□
	8200	76.2	143	13	24	21000	RX822M350TA43□□□
	8200	76.2	155	13	24	22500	RX822M350TA55□□□
	8200	89	105	13	24	20000	RX822M350XA05□□□
	8200	89	120	13	24	22000	RX822M350XA20□□□
	10000	76.2	140	10	20	24000	RX103M350TA40□□□
	10000	76.2	155	10	20	25000	RX103M350TA55□□□
	10000	89	130	10	20	27000	RX103M350XA30□□□
	10000	89	155	10	20	29000	RX103M350XA55□□□
	12000	76.2	170	9	17	27600	RX123M350TA70□□□
	12000	89	130	9	17	27500	RX123M350XA30□□□
	12000	89	155	9	17	29500	RX123M350XA55□□□
	12000	89	170	9	17	31000	RX123M350XA70□□□
	15000	76.2	220	7	13	35400	RX153M350TB20□□□
	15000	89	155	7	13	33800	RX153M350XA55□□□
	15000	89	170	7	13	35100	RX153M350XA70□□□
	15000	89	190	7	13	36000	RX153M350XA90□□□
	18000	89	180	6	11	43800	RX183M350XA80□□□
	18000	89	220	6	11	44600	RX183M350XB20□□□
	18000	100	190	6	11	48000	RX183M350DA90□□□
	22000	89	220	5	9	46700	RX223M350XB20□□□
	22000	100	250	5	9	48000	RX223M350DB50□□□

For further information please contact sales@capxon.org

STANDARD RATINGS

□□□ see terminal code at dimensions table

V_R (V)	C_R (µF)	ø D (mm)	L (mm)	Typ. ESR +20°C ▪ 120Hz (mΩ)	Max. ESR +20°C ▪ 120Hz (mΩ)	I_R ▪ Max. Ripple Current +85°C ▪ 120Hz (mA rms)	CapXon Part Number
400	220	35	50	470	900	1900	RX221M400P500□□□
	330	35	60	320	600	2300	RX331M400P600□□□
	470	35	80	220	420	4400	RX471M400P800□□□
	680	35	80	150	290	4500	RX681M400P800□□□
	680	35	120	150	290	5000	RX681M400PA20□□□
	680	51	80	150	290	6000	RX681M400R800□□□
	820	35	100	130	240	4700	RX821M400PA00□□□
	1000	51	60	110	200	4800	RX102M400R600□□□
	1000	51	80	110	200	6200	RX102M400R800□□□
	1200	51	70	89	170	5000	RX122M400R700□□□
	1200	51	83	89	170	6500	RX122M400R830□□□
	1500	51	80	68	130	6400	RX152M400R800□□□
	1500	51	95	68	130	7000	RX152M400R950□□□
	1500	63.5	95	68	130	8000	RX152M400S950□□□
	1800	51	85	58	110	7000	RX182M400R850□□□
	1800	51	95	58	110	7400	RX182M400R950□□□
	2200	51	105	48	90	8800	RX222M400RA05□□□
	2200	51	115	48	90	10000	RX222M400RA15□□□
	2200	63.5	85	48	90	10100	RX222M400S850□□□
	2200	63.5	100	48	90	11500	RX222M400SA00□□□
	2200	76.2	105	48	90	12500	RX222M400TA05□□□
	2700	51	115	39	74	10800	RX272M400RA15□□□
	2700	51	130	39	74	11000	RX272M400RA30□□□
	2700	63.5	90	39	74	11000	RX272M400S900□□□
	2700	63.5	105	39	74	12000	RX272M400SA05□□□
	2700	76.2	75	39	74	11600	RX272M400T750□□□
	3300	51	130	32	60	12800	RX332M400RA30□□□
	3300	51	150	32	60	14000	RX332M400RA50□□□
	3300	63.5	95	32	60	13000	RX332M400S950□□□
	3300	63.5	115	32	60	14000	RX332M400SA15□□□
	3300	76.2	90	32	60	14000	RX332M400T900□□□
	3300	76.2	105	32	60	14300	RX332M400TA05□□□
	3300	76.2	120	32	60	15000	RX332M400TA20□□□
	3900	63.5	100	27	51	14200	RX392M400SA00□□□
	3900	63.5	115	27	51	15200	RX392M400SA15□□□
	3900	76.2	90	27	51	15100	RX392M400T900□□□
	3900	76.2	120	27	51	16500	RX392M400TA20□□□
	4700	63.5	120	22	42	16000	RX472M400SA20□□□
	4700	63.5	155	22	42	17500	RX472M400SA55□□□
	4700	76.2	105	22	42	15500	RX472M400TA05□□□
	5600	63.5	145	19	36	18000	RX562M400SA45□□□
	5600	63.5	155	19	36	18200	RX562M400SA55□□□
	5600	63.5	170	19	36	19000	RX562M400SA70□□□
	5600	76.2	105	19	36	17000	RX562M400TA05□□□

STANDARD RATINGS

□□□ see terminal code at dimensions table

V_R (V)	C_R (µF)	ø D (mm)	L (mm)	Typ. ESR +20°C ▪ 120Hz (mΩ)	Max. ESR +20°C ▪ 120Hz (mΩ)	I_R ▪ Max. Ripple Current +85°C ▪ 120Hz (mA rms)	CapXon Part Number
400	5600	76.2	130	19	36	19000	RX562M400TA30□□□
	5600	89	92	19	36	18000	RX562M400X920□□□
	6800	63.5	160	15	29	23500	RX682M400SA60□□□
	6800	63.5	190	15	29	24200	RX682M400SA90□□□
	6800	76.2	130	15	29	19200	RX682M400TA30□□□
	6800	76.2	150	15	29	21500	RX682M400TA50□□□
	6800	89	105	15	29	21200	RX682M400XA05□□□
	6800	89	120	15	29	22300	RX682M400XA20□□□
	8200	76.2	135	13	24	24000	RX822M400TA35□□□
	8200	76.2	155	13	24	25000	RX822M400TA55□□□
	8200	76.2	170	13	24	26200	RX822M400TA70□□□
	8200	89	120	13	24	25000	RX822M400XA20□□□
	8200	89	140	13	24	26000	RX822M400XA40□□□
	10000	76.2	160	10	20	31600	RX103M400TA60□□□
	10000	76.2	180	10	20	33000	RX103M400TA80□□□
	10000	89	130	10	20	31000	RX103M400XA30□□□
	10000	89	155	10	20	34000	RX103M400XA55□□□
	12000	76.2	220	9	17	34000	RX123M400TB20□□□
	12000	89	155	9	17	30000	RX123M400XA55□□□
	12000	89	170	9	17	31300	RX123M400XA70□□□
	15000	89	180	7	13	39900	RX153M400XA80□□□
	15000	89	200	7	13	40700	RX153M400XB00□□□
	18000	89	210	6	11	43000	RX183M400XB10□□□
	18000	89	240	6	11	45000	RX183M400XB40□□□
	22000	100	240	5	9	47000	RX223M400DB40□□□
420	820	51	60	130	240	3800	RX821M420R600□□□
	1000	51	70	110	200	5100	RX102M420R700□□□
	1200	51	80	89	170	6600	RX122M420R800□□□
	1800	51	95	58	110	7600	RX182M420R950□□□
	1800	51	105	58	110	8000	RX182M420RA05□□□
	2200	51	115	48	90	10100	RX222M420RA15□□□
	2700	51	120	39	74	11000	RX272M420RA20□□□
	2700	63.5	90	39	74	11000	RX272M420S900□□□
	3300	51	130	32	60	13000	RX332M420RA30□□□
	3300	63.5	105	32	60	13500	RX332M420SA05□□□
	3300	76.2	105	32	60	14600	RX332M420TA05□□□
	3900	63.5	115	27	51	15800	RX392M420SA15□□□
	3900	63.5	130	27	51	16400	RX392M420SA30□□□
	3900	76.2	90	27	51	15500	RX392M420T900□□□
	4700	63.5	143	22	42	17000	RX472M420SA43□□□
	4700	63.5	155	22	42	17800	RX472M420SA55□□□
	4700	76.2	105	22	42	15700	RX472M420TA05□□□
	4700	76.2	143	22	42	17500	RX472M420TA43□□□
	5600	63.5	170	19	36	19200	RX562M420SA70□□□

For further information please contact sales@capxon.org

STANDARD RATINGS

□□□ see terminal code at dimensions table

V_R (V)	C_R (µF)	ø D (mm)	L (mm)	Typ. ESR +20°C ▪ 120Hz (mΩ)	Max. ESR +20°C ▪ 120Hz (mΩ)	I_R ▪ Max. Ripple Current +85°C ▪ 120Hz (mA rms)	CapXon Part Number
420	5600	76.2	115	76.2	115	17500	RX562M420TA15□□□
	5600	76.2	130	76.2	130	19200	RX562M420TA30□□□
	5600	89	90	89	90	18100	RX562M420X900□□□
	6800	76.2	143	76.2	143	21100	RX682M420TA43□□□
	6800	76.2	155	76.2	155	22000	RX682M420TA55□□□
	6800	89	105	89	105	19900	RX682M420XA05□□□
	6800	89	115	89	115	20500	RX682M420XA15□□□
	8200	76.2	170	76.2	170	27100	RX822M420TA70□□□
	8200	89	115	89	115	25000	RX822M420XA15□□□
	8200	89	130	89	130	26200	RX822M420XA30□□□
	10000	76.2	180	76.2	180	34000	RX103M420TA80□□□
	10000	76.2	220	76.2	220	37000	RX103M420TB20□□□
	10000	89	143	89	143	33000	RX103M420XA43□□□
	10000	89	155	89	155	35000	RX103M420XA55□□□
	12000	76.2	220	76.2	220	35000	RX123M420TB20□□□
	12000	89	155	89	155	31100	RX123M420XA55□□□
	12000	89	170	89	170	31700	RX123M420XA70□□□
	15000	89	190	89	190	40100	RX153M420XA90□□□
	18000	89	220	89	220	43300	RX183M420XB20□□□
450	220	35	50	35	50	2000	RX221M450P500□□□
	330	35	60	35	60	2500	RX331M450P600□□□
	470	35	80	35	80	4500	RX471M450P800□□□
	470	51	75	51	75	4500	RX471M450R750□□□
	680	35	100	35	100	4600	RX681M450PA00□□□
	680	35	120	35	120	5200	RX681M450PA20□□□
	680	51	80	51	80	6200	RX681M450R800□□□
	820	35	110	35	110	6400	RX821M450PA10□□□
	820	51	60	51	60	6000	RX821M450R600□□□
	1000	51	70	51	70	6300	RX102M450R700□□□
	1000	51	80	51	80	6500	RX102M450R800□□□
	1200	51	80	51	80	7000	RX122M450R800□□□
	1200	51	95	51	95	7300	RX122M450R950□□□
	1200	63.5	95	63.5	95	8300	RX122M450S950□□□
	1500	51	95	51	95	7500	RX152M450R950□□□
	1500	51	115	51	115	7800	RX152M450RA15□□□
	1800	51	105	51	105	8200	RX182M450RA05□□□
	1800	51	115	51	115	8400	RX182M450RA15□□□
	1800	63.5	80	63.5	80	8000	RX182M450S800□□□
	1800	63.5	105	63.5	105	8500	RX182M450SA05□□□
	2200	51	115	51	115	10200	RX222M450RA15□□□
	2200	51	130	51	130	11000	RX222M450RA30□□□
	2200	63.5	90	63.5	90	10000	RX222M450S900□□□
	2200	63.5	120	63.5	120	12100	RX222M450SA20□□□
	2200	76.2	85	76.2	85	11000	RX222M450T850□□□

For further information please contact sales@capxon.org

STANDARD RATINGS

□□□ see terminal code at dimensions table

V_R (V)	C_R (µF)	ø D (mm)	L (mm)	Typ. ESR +20°C ▪ 120Hz (mΩ)	Max. ESR +20°C ▪ 120Hz (mΩ)	I_R ▪ Max. Ripple Current +85°C ▪ 120Hz (mA rms)	CapXon Part Number
450	2700	51	115	39	74	11200	RX272M450RA15□□□
	2700	51	130	39	74	12000	RX272M450RA30□□□
	2700	63.5	95	39	74	12000	RX272M450S950□□□
	2700	63.5	115	39	74	13000	RX272M450SA15□□□
	2700	76.2	80	39	74	12000	RX272M450T800□□□
	2700	76.2	130	39	74	14800	RX272M450TA30□□□
	3300	63.5	105	32	60	13600	RX332M450SA05□□□
	3300	63.5	115	32	60	14000	RX332M450SA15□□□
	3300	76.2	100	32	60	15500	RX332M450TA00□□□
	3300	76.2	120	32	60	16000	RX332M450TA20□□□
	3900	63.5	125	27	51	16000	RX392M450SA25□□□
	3900	63.5	150	27	51	16600	RX392M450SA50□□□
	3900	76.2	90	27	51	15000	RX392M450T900□□□
	3900	76.2	115	27	51	17000	RX392M450TA15□□□
	3900	89	90	27	51	17000	RX392M450X900□□□
	4700	63.5	145	22	42	18700	RX472M450SA45□□□
	4700	63.5	170	22	42	20000	RX472M450SA70□□□
	4700	76.2	105	22	42	18000	RX472M450TA05□□□
	4700	76.2	130	22	42	20000	RX472M450TA30□□□
	4700	89	110	22	42	20000	RX472M450XA10□□□
	5600	63.5	165	19	36	21700	RX562M450SA65□□□
	5600	63.5	190	19	36	23200	RX562M450SA90□□□
	5600	76.2	115	19	36	20500	RX562M450TA15□□□
	5600	76.2	130	19	36	21600	RX562M450TA30□□□
	5600	89	90	19	36	20200	RX562M450X900□□□
	5600	89	120	19	36	22800	RX562M450XA20□□□
	6800	89	105	15	29	22800	RX682M450XA05□□□
	6800	89	130	15	29	25000	RX682M450XA30□□□
	8200	76.2	165	13	24	27000	RX822M450TA65□□□
	8200	76.2	180	13	24	30000	RX822M450TA80□□□
	8200	89	130	13	24	29000	RX822M450XA30□□□
	8200	89	155	13	24	31000	RX822M450XA55□□□
	10000	76.2	220	10	20	37500	RX103M450TB20□□□
	10000	89	155	10	20	36100	RX103M450XA55□□□
	10000	89	170	10	20	37600	RX103M450XA70□□□
	12000	76.2	220	9	17	39100	RX123M450TB20□□□
	12000	89	155	9	17	36400	RX123M450XA55□□□
	12000	89	190	9	17	39900	RX123M450XA90□□□
	12000	100	190	9	17	42500	RX123M450DA90□□□
	15000	89	220	7	13	43500	RX153M450XB20□□□
	15000	89	240	7	13	45300	RX153M450XB40□□□
	15000	100	195	7	13	43900	RX153M450DA95□□□
	18000	100	237	6	11	48000	RX183M450DB37□□□
	22000	89	236	5	9	48000	RX223M450XB36□□□

For further information please contact sales@capxon.org

STANDARD RATINGS

□□□ see terminal code at dimensions table

V_R (V)	C_R (µF)	ø D (mm)	L (mm)	Typ. ESR +20°C ▪ 120Hz (mΩ)	Max. ESR +20°C ▪ 120Hz (mΩ)	I_R ▪ Max. Ripple Current +85°C ▪ 120Hz (mA rms)	CapXon Part Number
500	1000	51	95	140	270	5600	RX102M500R950□□□
	1000	51	110	140	270	6000	RX102M500RA10□□□
	1000	63.5	80	140	270	6000	RX102M500S800□□□
	1200	51	95	120	220	7100	RX122M500R950□□□
	1200	51	115	120	220	8000	RX122M500RA15□□□
	1200	63.5	85	120	220	8100	RX122M500S850□□□
	1500	51	100	95	180	7200	RX152M500RA00□□□
	1500	51	115	95	180	7500	RX152M500RA15□□□
	1500	63.5	90	95	180	7500	RX152M500S900□□□
	1500	63.5	105	95	180	7800	RX152M500SA05□□□
	1800	51	130	79	150	8300	RX182M500RA30□□□
	1800	63.5	90	79	150	8200	RX182M500S900□□□
	1800	63.5	115	79	150	8600	RX182M500SA15□□□
	2200	51	143	63	120	12100	RX222M500RA43□□□
	2200	51	150	63	120	12500	RX222M500RA50□□□
	2200	63.5	105	63	120	11500	RX222M500SA05□□□
	2200	63.5	115	63	120	12200	RX222M500SA15□□□
	2700	63.5	115	52	98	13200	RX272M500SA15□□□
	2700	63.5	143	52	98	13800	RX272M500SA43□□□
	2700	76.2	90	52	98	12200	RX272M500T900□□□
	2700	76.2	110	52	98	13100	RX272M500TA10□□□
	3300	63.5	130	42	80	14300	RX332M500SA30□□□
	3300	63.5	150	42	80	15100	RX332M500SA50□□□
	3300	76.2	105	42	80	15100	RX332M500TA05□□□
	3300	76.2	115	42	80	16000	RX332M500TA15□□□
	3900	63.5	170	36	68	17200	RX392M500SA70□□□
	3900	76.2	115	36	68	17500	RX392M500TA15□□□
	3900	76.2	130	36	68	18200	RX392M500TA30□□□
	3900	89	90	36	68	17800	RX392M500X900□□□
	3900	89	120	36	68	19500	RX392M500XA20□□□
	4700	76.2	135	30	56	20500	RX472M500TA35□□□
	4700	76.2	150	30	56	21800	RX472M500TA50□□□
	4700	89	105	30	56	20000	RX472M500XA05□□□
	4700	89	130	30	56	22000	RX472M500XA30□□□
	5600	76.2	143	25	47	20000	RX562M500TA43□□□
	5600	76.2	170	25	47	20800	RX562M500TA70□□□
	5600	89	115	25	47	18200	RX562M500XA15□□□
	5600	89	130	25	47	19500	RX562M500XA30□□□
	6800	76.2	180	21	39	31000	RX682M500TA80□□□
	6800	76.2	190	21	39	31500	RX682M500TA90□□□
	6800	89	143	21	39	30600	RX682M500XA43□□□
	6800	89	170	21	39	31800	RX682M500XA70□□□
	8200	76.2	220	17	32	31800	RX822M500TB20□□□
	8200	89	155	17	32	32000	RX822M500XA55□□□

STANDARD RATINGS

□□□ see terminal code at dimensions table

V_R (V)	C_R (µF)	ø D (mm)	L (mm)	Typ. ESR +20°C ▪ 120Hz (mΩ)	Max. ESR +20°C ▪ 120Hz (mΩ)	I_R ▪ Max. Ripple Current +85°C ▪ 120Hz (mA rms)	CapXon Part Number
500	8200	89	175	17	32	33000	RX822M500XA75□□□
	8200	100	175	17	32	34100	RX822M500DA75□□□
	10000	89	190	14	27	38300	RX103M500XA90□□□
	10000	89	220	14	27	39500	RX103M500XB20□□□
	10000	100	190	14	27	41500	RX103M500DA90□□□
	12000	89	220	12	22	39100	RX123M500XB20□□□
	12000	89	240	12	22	40500	RX123M500XB40□□□
	12000	100	210	12	22	41600	RX123M500DB10□□□
	12000	100	240	12	22	42400	RX123M500DB40□□□
	15000	100	250	9	18	43500	RX153M500DB50□□□
550	1200	51	110	120	220	6400	RX122M550RA10□□□
	1200	63.5	110	120	220	8000	RX122M550SA10□□□
	1500	51	130	95	180	7700	RX152M550RA30□□□
	1500	63.5	130	95	180	9000	RX152M550SA30□□□
	1800	63.5	105	79	150	8700	RX182M550SA05□□□
	1800	63.5	120	79	150	9000	RX182M550SA20□□□
	1800	76.2	110	79	150	10000	RX182M550TA10□□□
	2200	63.5	120	63	120	10300	RX222M550SA20□□□
	2200	76.2	130	63	120	13000	RX222M550TA30□□□
	2700	63.5	150	52	98	12500	RX272M550SA50□□□
	2700	76.2	105	52	98	12300	RX272M550TA05□□□
	2700	76.2	155	52	98	16000	RX272M550TA55□□□
	3300	63.5	170	42	80	15200	RX332M550SA70□□□
	3300	76.2	130	42	80	15600	RX332M550TA30□□□
	3300	76.2	155	42	80	17000	RX332M550TA55□□□
	3900	76.2	140	36	68	18400	RX392M550TA40□□□
	3900	89	150	36	68	21000	RX392M550XA50□□□
	4700	76.2	170	30	56	22200	RX472M550TA70□□□
	4700	89	130	30	56	23200	RX472M550XA30□□□
	4700	89	170	30	56	25000	RX472M550XA70□□□
	5600	76.2	190	25	47	25000	RX562M550TA90□□□
	5600	89	150	25	47	24500	RX562M550XA50□□□
	5600	89	190	25	47	27200	RX562M550XA90□□□
	6800	89	170	21	39	27500	RX682M550XA70□□□
	6800	89	190	21	39	28900	RX682M550XA90□□□
	8200	89	220	17	32	36500	RX822M550XB20□□□
	8200	100	170	17	32	35000	RX822M550DA70□□□
	8200	100	220	17	32	40000	RX822M550DB20□□□
	10000	89	240	14	27	42500	RX103M550XB40□□□
	10000	100	200	14	27	42400	RX103M550DB00□□□
	10000	100	250	14	27	43000	RX103M550DB50□□□
600	1200	63.5	95	150	280	7000	RX122M600S950□□□
	1500	63.5	110	120	220	8400	RX152M600SA10□□□
	1800	63.5	125	95	180	9700	RX182M600SA25□□□

For further information please contact sales@capxon.org

STANDARD RATINGS

□□□ see terminal code at dimensions table

V_R (V)	C_R (µF)	ø D (mm)	L (mm)	Typ. ESR +20°C ▪ 120Hz (mΩ)	Max. ESR +20°C ▪ 120Hz (mΩ)	I_R ▪ Max. Ripple Current +85°C ▪ 120Hz (mA rms)	CapXon Part Number
600	1800	76.2	95	95	180	9500	RX182M600T950□□□
	2200	63.5	145	79	150	11400	RX222M600SA45□□□
	2200	76.2	110	79	150	11200	RX222M600TA10□□□
	2700	63.5	170	63	120	13500	RX272M600SA70□□□
	2700	76.2	125	63	120	13200	RX272M600TA25□□□
	3300	76.2	145	53	100	15500	RX332M600TA45□□□
	3900	76.2	170	45	85	21100	RX392M600TA70□□□
	3900	89	130	45	85	19800	RX392M600XA30□□□
	4700	76.2	190	37	71	22500	RX472M600TA90□□□
	4700	89	150	37	71	24000	RX472M600XA50□□□
	5600	89	170	31	59	26000	RX562M600XA70□□□
650	1000	63.5	100	170	330	7200	RX102M650SA00□□□
	1200	63.5	110	150	280	8000	RX122M650SA10□□□
	1500	63.5	130	120	220	9200	RX152M650SA30□□□
	1800	63.5	150	95	180	10500	RX182M650SA50□□□
	2200	63.5	170	79	150	12300	RX222M650SA70□□□
	2700	76.2	150	63	120	14500	RX272M650TA50□□□
	3300	76.2	170	53	100	16800	RX332M650TA70□□□
	3900	89	155	45	85	22000	RX392M650XA55□□□
	4700	89	190	37	71	28000	RX472M650XA90□□□

For further information please contact sales@capxon.org

DIMENSIONS ▪ Ring clamp mounting ▪ All dimensions in mm

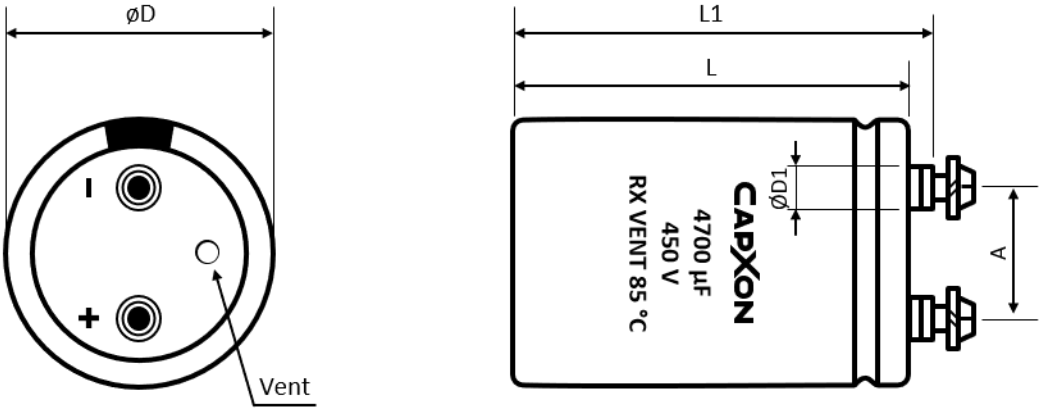

Terminal	Dimensions (mm) with insulating sleeve					Min. Full Thread (mm)	Max. Torque (Nm)	Terminal code
	D ± 2	L ± 3	L1 ± 3	D1 max.	A ± 0.5			
M5	35	50 ~ 120	56.5 ~ 126.5	8.3	12.7	8	2	A50
M5	51	50 ~ 140	56.5 ~ 146.5	10.3	22	8	2	A50
M5	63.5	80 ~ 140	86.5 ~ 146.5	10.3	28.6	8	2	A50
M5	63.5	80 ~ 140	86.5 ~ 146.5	13	28.6	8	2	A53
M5	76.2	100 ~ 240	106.5 ~ 246.5	10.3	31.8	12	2.5	A50
M5	76.2	100 ~ 240	106.5 ~ 246.5	13	31.8	12	2.5	A53
M6	76.2	100 ~ 240	106.5 ~ 246.5	13	31.8	12	2.5	A63
M6	76.2	100 ~ 240	106.5 ~ 246.5	17.5	31.8	12	2.5	A67
M6	89	100 ~ 240	106.5 ~ 246.5	13	31.8	12	2.5	A63
M6	89	100 ~ 240	106.5 ~ 246.5	17.5	31.8	12	2.5	A67
M8	100	100 ~ 240	110 ~ 250	17.5	41.5	16	5	A87

DIMENSIONS ▪ Threaded stud mounting ▪ All dimensions in mm

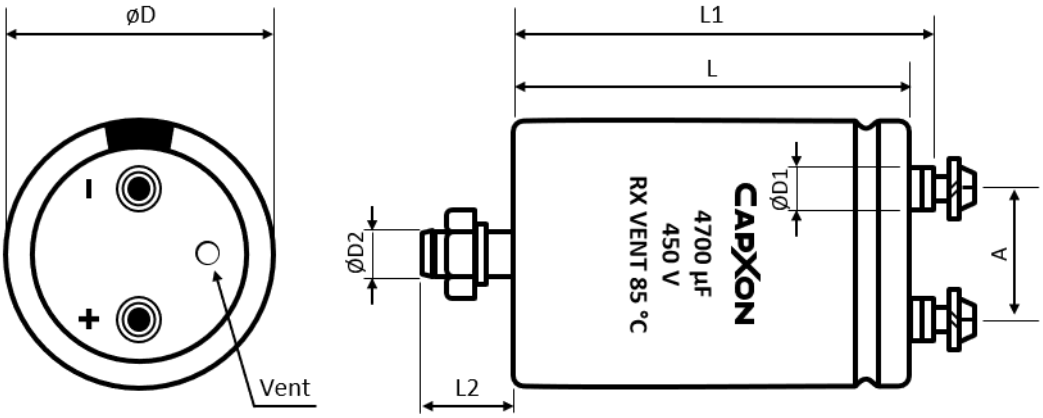

For further information please contact sales@capxon.org

DIMENSIONS ▪ Threaded stud mounting ▪ All dimensions in mm

Terminal	Dimensions (mm) with insulating sleeve							Min. Full Thread (mm)	Max. Torque (Nm)	Terminal code
	D ± 2	L ± 3	L1 ± 3	L2 ± 1	D1 max.	D2	A ± 0.5			
M5	35	50 ~ 120	56.5 ~ 126.5	12	8.3	M8	12.7	8	2	E50
M5	51	50 ~ 140	56.5 ~ 146.5	16	10.3	M12	22	8	2	E50
M5	63.5	80 ~ 140	86.5 ~ 146.5	16	10.3	M12	28.6	8	2	E50
M5	63.5	80 ~ 140	86.5 ~ 146.5	16	13	M12	28.6	8	2	E53
M5	76.2	100 ~ 240	106.5 ~ 246.5	16	10.3	M12	31.8	12	2.5	E50
M5	76.2	100 ~ 240	106.5 ~ 246.5	16	13	M12	31.8	12	2.5	E53
M6	76.2	100 ~ 240	106.5 ~ 246.5	16	13	M12	31.8	12	2.5	E63
M6	76.2	100 ~ 240	106.5 ~ 246.5	16	17.5	M12	31.8	12	2.5	E67
M6	89	100 ~ 240	106.5 ~ 246.5	16	13	M12	31.8	12	2.5	E63
M6	89	100 ~ 240	106.5 ~ 246.5	16	17.5	M12	31.8	12	2.5	E67
M8	100	100 ~ 240	110 ~ 250	16	17.5	M12	41.5	16	5	E87

ACCESSORIES

- The capacitors are supplied with suitable screws, serrated washers and plain washers. Accessories are not fastened to the capacitor.
- Suitable ring clamps and further assembly material see additional information “Accessories”.

MULTIPLIER K_f for RIPPLE CURRENT vs. FREQUENCY

Frequency (Hz)	50/60	100/120	300	1k	≥ 3k
K_f	0.8	1	1.2	1.3	1.4

PRECAUTIONS, GUIDELINES AND PACKAGING INFORMATON

Unless otherwise agreed in individual specifications, all products are subject to our “General Precautions and Guidelines” as well as our “Packaging Information”. Please refer to the following pages in the table.

	
General Precautions and Guidelines	Packaging Information Liquid Screw
Page 837	Page 681

For further information please contact sales@capxon.org

USEFUL LIFE

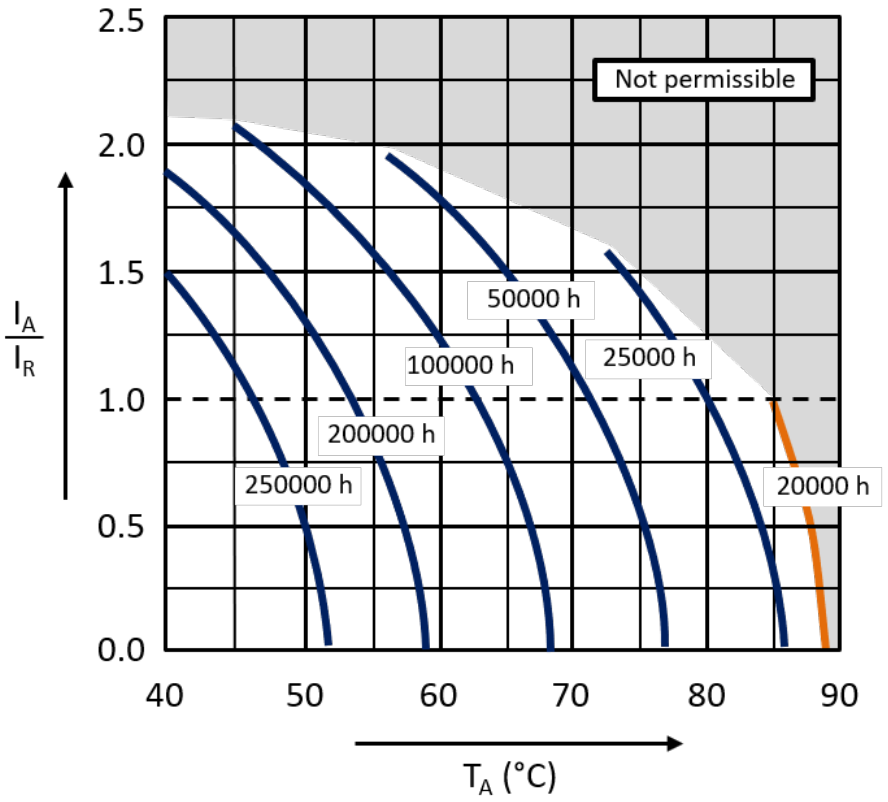

With: I_A: Actual application current
I_R: Maximum permissible rated ripple current (A RMS)
T_A: Ambient temperature of the capacitor

DISCLAIMER
All product related data (e.g. specification, statements and general information) are subject to change without any notice. It is necessary that the customer observes all product related technical / application information and handling instructions.

CapXon products are designed and manufactured according to severe quality and safety standards. Under no circumstance, CapXon warrants that any CapXon product is suitable for the purposes intended for your application, even CapXon knows the application. It is customer's duty and obligation to check and make sure that CapXon products are suitable for the purposes intended and select the correct and proper CapXon product. Customers are requested to perform a sufficient validation and reliability evaluation to assure needed safety level and reliability performance by suitable designs and to apply proper safeguards (e.g. redundancies, protective circuits).

Particular operating conditions (ambient temperature, ripple current, voltage, thermal resistance, etc.) as well as storage, production or assembly may affect the performance and the lifetime of the capacitor. Please consult CapXon for lifetime estimation, failure mode considerations or worst-case scenarios according to the product technology, product tolerances / deviations or change of the characteristics of the capacitor due to shipment, storage, handling, production and usage.

For aerospace or military application, life-saving, life-sustaining, safety critical applications or any application where failure may cause severe personal injury or death, please consult us before design-in the capacitor in your application.

Except for the written expressed warranties, CapXon does not impliedly, by assumption or whatever else, warrant, undertake, promise any other warranty or guaranty for any CapXon product.

For further information, please visit our website www.capxongroup.com or contact CapXon directly

RU SERIES ▪ LONG LIFE 85°C TYPE



KEY FEATURES

HIGH VOLTAGE LONG LIFE

- **ALUMINUM ELECTROLYTIC CAPACITOR** ▪ Screw terminal type
- Useful life: 85°C ▪ 12000 hours
- Wide capacitance range
- All-welded construction ensures highest reliability
- Bottom cooling possible due to the thermal construction

HF Halogen Free

RoHS & REACH COMPLIANT

SPECIFICATIONS

Items		Performance Characteristics		
Operating Temperature Range		-40 ~ +85°C	-25 ~ +85°C	
Rated Voltage Range	V_R	200 ~ 450V DC	500V DC	
Surge Voltage	V_S	($V_R \le 315V$): $V_S = 1.15 \cdot V_R$	($V_R > 315V$): $V_S = 1.10 \cdot V_R$	
Capacitance Range	C_R	1000 ~ 33000µF	820 ~ 10000µF	
Cap. Tolerance	ΔC	±20% (120Hz ▪ 20°C)		
Leakage Current (20°C ▪ V_R applied)	I_{LEAK}	$\le 0.018 \cdot (C_R \cdot V_R)^{0.85} + 4$ (µA) or 5mA (whichever is smaller) ▪ After 5 minutes [I_{LEAK} (µA) ; C_R (µF) ; V_R (V)]		
Dissipation Factor % (20°C ▪ 120Hz)	tanδ	V_R (V DC)	160 ~ 450	500
		tanδ	15	20
Low Temperature Characteristics at 120Hz	Z ratio max.	V_R (V DC)	160 ~ 450	500
		Z-25°C/Z+20°C	4	4
		Z-40°C/Z+20°C	10	-

Lifetime Test		
Useful Life 85°C (V_R & I_R applied)	Test	**12000 hours**
	△C/C_R	≤ ±15% of initial measured value
	tanδ	≤ 175% of initial specified value
	I_{Leak}	≤ the initial specified value
	Deviation Rate @ Useful Life: 10 000 FIT = 1%/1000h with 60% confidence level ▪ parts show higher drift as test criteria	
Endurance 85°C (V_R & I_R applied)	Test	**2000 hours**
	△C/C_R	≤ ±10% of initial measured value
	tanδ	≤ 130% of initial specified value
	I_{Leak}	≤ the initial specified value
Shelf Life 85°C (V_R = 0)	Test	**1000 hours**
	△C/C_R	≤ ±10% of initial measured value
	tanδ	≤ 130% of initial specified value
	I_{Leak}	≤ the initial specified value
	Before measurement: Restore capacitor to 20°C, apply V_R for 30 min according JIS-C-5101-4	
Vibration Resistance Test	Max. 10g force, f_{RANGE} 10Hz … 55Hz, amplitude 0.75mm; X/Y/Z-axis each 2h; capacitor rigidly clamped by body to surface ▪ IEC 60068-2-6	

For further information please contact sales@capxon.org

STANDARD RATINGS

□□□ see terminal code at dimensions table

V_R (V)	C_R (µF)	ø D (mm)	L (mm)	Typ. ESR +20°C ▪ 120Hz (mΩ)	Max. ESR +20°C ▪ 120Hz (mΩ)	I_R ▪ Max. Ripple Current +85°C ▪ 120Hz (mA rms)	CapXon Part Number
200	3300	51	80	33	60	8590	RU332M200R800□□□
	3900	51	95	28	51	9780	RU392M200R950□□□
	4700	51	105	24	42	11300	RU472M200RA05□□□
	4700	63.5	80	24	42	11400	RU472M200S800□□□
	5600	51	115	20	36	12400	RU562M200RA15□□□
	5600	63.5	95	20	36	12900	RU562M200S950□□□
	6800	63.5	95	16	29	14000	RU682M200S950□□□
	8200	63.5	115	13	24	17600	RU822M200SA15□□□
	8200	76.2	95	13	24	18000	RU822M200T950□□□
	10000	63.5	130	11	20	19800	RU103M200SA30□□□
	10000	76.2	105	11	20	20000	RU103M200TA05□□□
	12000	76.2	115	9	17	22300	RU123M200TA15□□□
	15000	76.2	140	7	13	27800	RU153M200TA40□□□
	15000	89	120	7	13	28400	RU153M200XA20□□□
	18000	76.2	155	6	11	30500	RU183M200TA55□□□
	18000	89	140	6	11	31800	RU183M200XA40□□□
	22000	76.2	190	5	9	34600	RU223M200TA90□□□
	22000	89	170	5	9	35900	RU223M200XA70□□□
	27000	76.2	220	4	7	39400	RU273M200TB20□□□
	27000	89	195	4	7	40600	RU273M200XA95□□□
	33000	89	220	3	6	45900	RU333M200XB20□□□
250	2700	51	80	41	74	7280	RU272M250R800□□□
	3300	51	80	33	60	8900	RU332M250R800□□□
	3900	51	105	28	51	9930	RU392M250RA05□□□
	3900	63.5	80	28	51	10000	RU392M250S800□□□
	4700	51	130	24	42	11600	RU472M250RA30□□□
	4700	63.5	95	24	42	11700	RU472M250S950□□□
	5600	63.5	95	20	36	12300	RU562M250S950□□□
	6800	63.5	115	16	29	15400	RU682M250SA15□□□
	6800	76.2	95	16	29	15800	RU682M250T950□□□
	8200	63.5	130	13	24	17400	RU822M250SA30□□□
	8200	76.2	105	13	24	17600	RU822M250TA05□□□
	10000	76.2	115	11	20	20200	RU103M250TA15□□□
	10000	89	120	11	20	22500	RU103M250XA20□□□
	12000	76.2	140	9	17	24200	RU123M250TA40□□□
	12000	89	120	9	17	24700	RU123M250XA20□□□
	15000	76.2	160	7	13	27500	RU153M250TA60□□□
	15000	89	140	7	13	28300	RU153M250XA40□□□
	18000	76.2	190	6	11	30600	RU183M250TA90□□□
	18000	89	170	6	11	31700	RU183M250XA70□□□
	22000	76.2	220	5	9	34800	RU223M250TB20□□□
	22000	89	195	5	9	35900	RU223M250XA95□□□
	27000	89	220	4	7	40800	RU273M250XB20□□□

For further information please contact sales@capxon.org

STANDARD RATINGS

□□□ see terminal code at dimensions table

V_R (V)	C_R (µF)	ø D (mm)	L (mm)	Typ. ESR +20°C ▪ 120Hz (mΩ)	Max. ESR +20°C ▪ 120Hz (mΩ)	I_R ▪ Max. Ripple Current +85°C ▪ 120Hz (mA rms)	CapXon Part Number
350	1500	51	80	72	130	6440	RU152M350R800□□□
	1800	51	80	61	110	9510	RU182M350R800□□□
	2200	51	80	50	90	9700	RU222M350R800□□□
	2200	51	95	50	90	10800	RU222M350R950□□□
	2200	63.5	80	50	90	11300	RU222M350S800□□□
	2700	51	95	41	74	12000	RU272M350R950□□□
	2700	63.5	80	41	74	12600	RU272M350S800□□□
	3300	51	115	33	60	14300	RU332M350RA15□□□
	3300	63.5	90	33	60	14500	RU332M350S900□□□
	3900	51	130	28	51	16200	RU392M350RA30□□□
	3900	63.5	95	28	51	16300	RU392M350S950□□□
	3900	63.5	105	28	51	16600	RU392M350SA05□□□
	4700	63.5	105	24	42	17900	RU472M350SA05□□□
	4700	76.2	95	24	42	19300	RU472M350T950□□□
	5600	63.5	120	20	36	19400	RU562M350SA20□□□
	5600	76.2	95	20	36	20200	RU562M350T950□□□
	6800	63.5	140	16	29	23200	RU682M350SA40□□□
	6800	76.2	105	16	29	23100	RU682M350TA05□□□
	6800	89	100	16	29	25000	RU682M350XA00□□□
	8200	76.2	115	13	24	25100	RU822M350TA15□□□
	8200	89	120	13	24	29600	RU822M350XA20□□□
	10000	76.2	140	11	20	32100	RU103M350TA40□□□
	10000	89	120	11	20	33200	RU103M350XA20□□□
	12000	76.2	170	9	17	35300	RU123M350TA70□□□
	12000	89	140	9	17	37300	RU123M350XA40□□□
	15000	76.2	190	7	13	41000	RU153M350TA90□□□
	15000	89	160	7	13	41900	RU153M350XA60□□□
	18000	89	195	6	11	48100	RU183M350XA95□□□
	22000	89	220	5	9	50500	RU223M350XB20□□□
400	1000	51	80	110	200	4600	RU102M400R800□□□
	1500	51	80	72	130	7000	RU152M400R800□□□
	1800	51	95	61	110	9980	RU182M400R950□□□
	2200	51	100	50	90	11200	RU222M400RA00□□□
	2200	63.5	80	50	90	11600	RU222M400S800□□□
	2700	51	115	41	74	13200	RU272M400RA15□□□
	2700	63.5	95	41	74	13900	RU272M400S950□□□
	3300	51	130	33	60	14600	RU332M400RA30□□□
	3300	63.5	105	33	60	15000	RU332M400SA05□□□
	3900	63.5	105	28	51	16100	RU392M400SA05□□□
	3900	76.2	95	28	51	18300	RU392M400T950□□□
	4700	63.5	130	24	42	20200	RU472M400SA30□□□
	4700	76.2	95	24	42	20000	RU472M400T950□□□
	5600	63.5	140	20	36	21500	RU562M400SA40□□□
	5600	76.2	115	20	36	21800	RU562M400TA15□□□

For further information please contact sales@capxon.org

STANDARD RATINGS

□□□ see terminal code at dimensions table

V_R (V)	C_R (µF)	ø D (mm)	L (mm)	Typ. ESR +20°C ▪ 120Hz (mΩ)	Max. ESR +20°C ▪ 120Hz (mΩ)	I_R ▪ Max. Ripple Current +85°C ▪ 120Hz (mA rms)	CapXon Part Number
400	6800	76.2	130	16	29	25200	RU682M400TA30□□□
	6800	89	120	16	29	27300	RU682M400XA20□□□
	8200	76.2	155	13	24	29200	RU822M400TA55□□□
	8200	89	120	13	24	29100	RU822M400XA20□□□
	10000	76.2	165	11	20	32500	RU103M400TA65□□□
	10000	89	140	11	20	34700	RU103M400XA40□□□
	12000	76.2	220	8	17	39500	RU123M400TB20□□□
	12000	89	160	8	17	38000	RU123M400XA60□□□
	15000	76.2	230	7	13	42100	RU153M400TB30□□□
	15000	89	180	7	13	41600	RU153M400XA80□□□
	18000	89	220	6	11	46400	RU183M400XB20□□□
450	1200	51	80	94	170	7110	RU122M450R800□□□
	1500	51	80	72	130	7790	RU152M450R800□□□
	1800	51	105	61	110	9590	RU182M450RA05□□□
	1800	63.5	80	61	110	9770	RU182M450S800□□□
	2200	51	115	50	90	11000	RU222M450RA15□□□
	2200	63.5	95	50	90	11400	RU222M450S950□□□
	2700	63.5	95	41	74	12600	RU272M450S950□□□
	2700	76.2	95	41	74	14200	RU272M450T950□□□
	3300	63.5	115	33	60	14400	RU332M450SA15□□□
	3300	76.2	95	33	60	15000	RU332M450T950□□□
	3900	63.5	130	28	51	16200	RU392M450SA30□□□
	3900	76.2	105	28	51	16300	RU392M450TA05□□□
	4700	76.2	115	24	42	20400	RU472M450TA15□□□
	5600	76.2	130	20	36	22900	RU562M450TA30□□□
	5600	89	120	20	36	24200	RU562M450XA20□□□
	6800	76.2	155	16	29	27300	RU682M450TA55□□□
	8200	76.2	190	13	24	29600	RU822M450TA90□□□
	8200	89	170	13	24	30700	RU822M450XA70□□□
	10000	76.2	220	11	20	32600	RU103M450TB20□□□
	10000	89	170	11	20	33400	RU103M450XA70□□□
	12000	89	195	9	17	37700	RU123M450XA95□□□
500	820	51	80	180	320	5090	RU821M500R800□□□
	1000	51	95	150	270	5800	RU102M500R950□□□
	1200	51	95	120	220	6570	RU122M500R950□□□
	1200	63.5	80	120	220	7000	RU122M500S800□□□
	1500	51	115	100	180	7680	RU152M500RA15□□□
	1500	63.5	80	100	180	7790	RU152M500S800□□□
	1800	51	130	83	150	8770	RU182M500RA30□□□
	1800	63.5	95	83	150	8830	RU182M500S950□□□
	2200	63.5	105	67	120	10000	RU222M500SA05□□□
	2700	63.5	115	55	98	11500	RU272M500SA15□□□
	2700	76.2	95	55	98	11900	RU272M500T950□□□
	3300	63.5	140	45	80	13200	RU332M500SA40□□□

STANDARD RATINGS

□□□ see terminal code at dimensions table

V_R (V)	C_R (µF)	ø D (mm)	L (mm)	Typ. ESR +20°C ▪ 120Hz (mΩ)	Max. ESR +20°C ▪ 120Hz (mΩ)	I_R ▪ Max. Ripple Current +85°C ▪ 120Hz (mA rms)	CapXon Part Number
500	3300	76.2	115	45	80	13500	RU332M500TA15□□□
	3900	76.2	130	38	68	15100	RU392M500TA30□□□
	4700	76.2	120	31	56	18700	RU472M500TA20□□□
	5600	76.2	165	26	47	19900	RU562M500TA65□□□
	5600	89	140	26	47	20800	RU562M500XA40□□□
	6800	76.2	190	22	39	22800	RU682M500TA90□□□
	6800	89	170	22	39	23500	RU682M500XA70□□□
	8200	76.2	220	18	32	26200	RU822M500TB20□□□
	8200	89	195	18	32	26600	RU822M500XA95□□□
	10000	89	220	15	27	30400	RU103M500XB20□□□

DIMENSIONS ▪ Ring clamp mounting ▪ All dimensions in mm

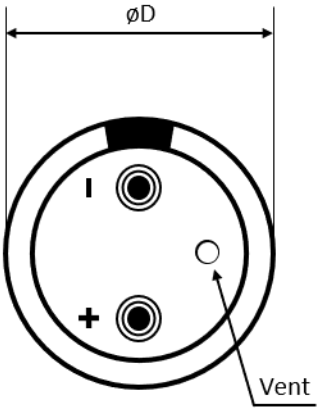

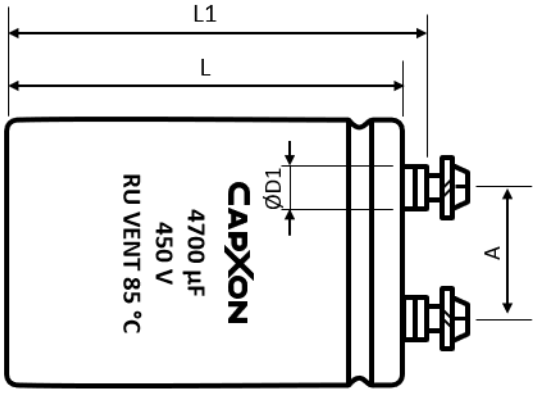

Terminal	Dimensions (mm) with insulating sleeve					Min. Full Thread (mm)	Max. Torque (Nm)	Terminal code
	D ± 2	L ± 3	L1 ± 3	D1 max.	A ± 0.5			
M5	51	50 ~ 140	56.5 ~ 146.5	10.3	22	8	2	A50
M5	63.5	80 ~ 140	86.5 ~ 146.5	10.3	28.6	8	2	A50
M5	63.5	80 ~ 140	86.5 ~ 146.5	13	28.6	8	2	A53
M5	76.2	100 ~ 240	106.5 ~ 246.5	10.3	31.8	12	2.5	A50
M5	76.2	100 ~ 240	106.5 ~ 246.5	13	31.8	12	2.5	A53
M6	76.2	100 ~ 240	106.5 ~ 246.5	13	31.8	12	2.5	A63
M6	76.2	100 ~ 240	106.5 ~ 246.5	17.5	31.8	12	2.5	A67
M6	89	100 ~ 240	106.5 ~ 246.5	13	31.8	12	2.5	A63
M6	89	100 ~ 240	106.5 ~ 246.5	17.5	31.8	12	2.5	A67

For further information please contact sales@capxon.org

DIMENSIONS ▪ Threaded stud mounting ▪ All dimensions in mm

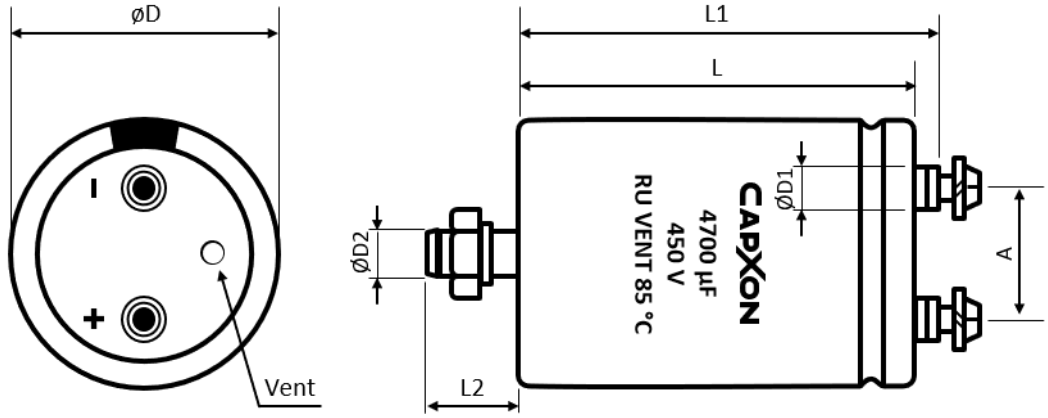

Terminal	Dimensions (mm) with insulating sleeve							Min. Full Thread (mm)	Max. Torque (Nm)	Terminal code
	D ± 2	L ± 3	L1 ± 3	L2 ± 1	D1 max.	D2	A ± 0.5			
M5	51	50 ~ 140	56.5 ~ 146.5	16	10.3	M12	22	8	2	E50
M5	63.5	80 ~ 140	86.5 ~ 146.5	16	10.3	M12	28.6	8	2	E50
M5	63.5	80 ~ 140	86.5 ~ 146.5	16	13	M12	28.6	8	2	E53
M5	76.2	100 ~ 240	106.5 ~ 246.5	16	10.3	M12	31.8	12	2.5	E50
M5	76.2	100 ~ 240	106.5 ~ 246.5	16	13	M12	31.8	12	2.5	E53
M6	76.2	100 ~ 240	106.5 ~ 246.5	16	13	M12	31.8	12	2.5	E63
M6	76.2	100 ~ 240	106.5 ~ 246.5	16	17.5	M12	31.8	12	2.5	E67
M6	89	100 ~ 240	106.5 ~ 246.5	16	13	M12	31.8	12	2.5	E63
M6	89	100 ~ 240	106.5 ~ 246.5	16	17.5	M12	31.8	12	2.5	E67

ACCESSORIES

- The capacitors are supplied with suitable screws, serrated washers and plain washers. Accessories are not fastened to the capacitor.
- Suitable ring clamps and further assembly material see additional information “Accessories”.

MULTIPLIER K_f for RIPPLE CURRENT vs. FREQUENCY

Frequency (Hz)	50/60	100/120	300	1k	≥ 3k
K_f	0.8	1	1.2	1.3	1.4

For further information please contact sales@capxon.org

PRECAUTIONS, GUIDELINES AND PACKAGING INFORMATON

Unless otherwise agreed in individual specifications, all products are subject to our “General Precautions and Guidelines” as well as our “Packaging Information”. Please refer to the following pages in the table.

General Precautions and Guidelines	Packaging Information Liquid Screw
Page 837	Page 681

USEFUL LIFE

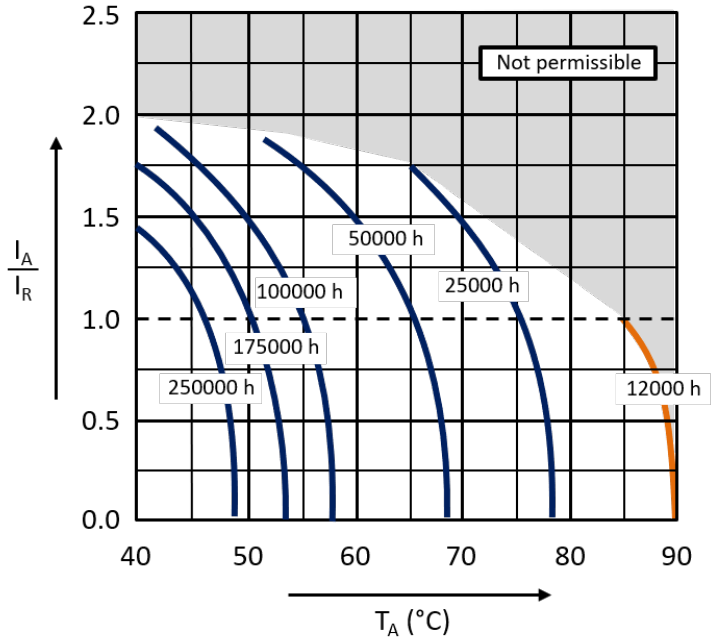

With: I_A: Actual application current
I_R: Maximum permissible rated ripple current (A RMS)
T_A: Ambient temperature of the capacitor

DISCLAIMER
All product related data (e.g. specification, statements and general information) are subject to change without any notice. It is necessary that the customer observes all product related technical / application information and handling instructions.

CapXon products are designed and manufactured according to severe quality and safety standards. Under no circumstance, CapXon warrants that any CapXon product is suitable for the purposes intended for your application, even CapXon knows the application. It is customer's duty and obligation to check and make sure that CapXon products are suitable for the purposes intended and select the correct and proper CapXon product. Customers are requested to perform a sufficient validation and reliability evaluation to assure needed safety level and reliability performance by suitable designs and to apply proper safeguards (e.g. redundancies, protective circuits).

Particular operating conditions (ambient temperature, ripple current, voltage, thermal resistance, etc.) as well as storage, production or assembly may affect the performance and the lifetime of the capacitor. Please consult CapXon for lifetime estimation, failure mode considerations or worst-case scenarios according to the product technology, product tolerances / deviations or change of the characteristics of the capacitor due to shipment, storage, handling, production and usage.

For aerospace or military application, life-saving, life-sustaining, safety critical applications or any application where failure may cause severe personal injury or death, please consult us before design-in the capacitor in your application.

Except for the written expressed warranties, CapXon does not impliedly, by assumption or whatever else, warrant, undertake, promise any other warranty or guaranty for any CapXon product.

For further information, please visit our website www.capxongroup.com or contact CapXon directly.

RK SERIES ▪ LONG LIFE 105°C TYPE



KEY FEATURES

LONG LIFE

- **ALUMINUM ELECTROLYTIC CAPACITOR** ▪ Screw terminal type
- Useful life: 105°C ▪ 4000 hours
- Wide capacitance range
- All-welded construction ensures highest reliability
- Bottom cooling possible due to the thermal construction

HF Halogen Free

RoHS & REACH COMPLIANT

SPECIFICATIONS

Items		Performance Characteristics	
Operating Temperature Range		-40 ~ +105°C	
Rated Voltage Range	V_R	10 ~ 100V DC	
Surge Voltage	V_S	$V_S = 1.15 \cdot V_R$	
Capacitance Range	C_R	1000 ~ 1000000µF	
Cap. Tolerance	ΔC	±20% (120Hz ▪ 20°C)	
Leakage Current (20°C ▪ V_R applied)	I_{LEAK}	≤ $0.018 \cdot (C_R \cdot V_R)^{0.85} + 4$ (µA) or 5mA (whichever is smaller) ▪ After 5 minutes [I_{LEAK} (µA) ; C_R (µF) ; V_R (V)]	
Dissipation Factor % (20°C ▪ 120Hz)	tanδ	Not to exceed the values shown in standard ratings	
Low Temperature Characteristics at 120Hz	Z ratio max.	V_R (V DC)	10 ~ 100
		Z-25°C/Z+20°C	3
		Z-40°C/Z+20°C	12

Lifetime Test		
Useful Life 105°C (V_R & I_R applied)	Test	**4000 hours**
	△C/C_R	≤ ±45% of initial measured value
	tanδ	≤ 300% of initial specified value
	I_{Leak}	≤ the initial specified value
	Deviation Rate @ Useful Life: 10 000 FIT = 1%/1000h with 60% confidence level ▪ parts show higher drift as test criteria	
Endurance 105°C (V_R & I_R applied)	Test	**2000 hours**
	△C/C_R	≤ ±20% of initial measured value
	tanδ	≤ 200% of initial specified value
	I_{Leak}	≤ the initial specified value
Shelf Life 105°C (V_R = 0)	Test	**1000 hours**
	△C/C_R	≤ ±20% of initial measured value
	tanδ	≤ 200% of initial specified value
	I_{Leak}	≤ the initial specified value
	Before measurement: Restore capacitor to 20°C, apply V_R for 30 min according JIS-C-5101-4	
Vibration Resistance Test	Max. 10g force, f_{RANGE} 10Hz … 55Hz, amplitude 0.75mm; X/Y/Z-axis each 2h; capacitor rigidly clamped by body to surface ▪ IEC 60068-2-6	

For further information please contact sales@capxon.org

STANDARD RATINGS

□□□ see terminal code at dimensions table

V_R (V)	C_R (µF)	ø D (mm)	L (mm)	tanδ % (+20°C) (120Hz)	Typ. ESR +20°C ▪ 120Hz (mΩ)	Max. ESR +20°C ▪ 120Hz (mΩ)	I_R ▪ Max. Ripple Current +105°C ▪ 120Hz (mA rms)	CapXon Part Number
10	27000	35	50	75	20	37	4900	RK273M010P500□□□
	33000	35	50	75	15	30	5100	RK333M010P500□□□
	39000	35	60	75	13	26	5900	RK393M010P600□□□
	47000	35	80	75	12	21	7100	RK473M010P800□□□
	56000	35	80	75	12	18	8000	RK563M010P800□□□
	68000	35	100	75	10	18	8500	RK683M010PA00□□□
	68000	51	80	100	10	20	8500	RK683M010R800□□□
	82000	35	100	75	8	17	8900	RK823M010PA00□□□
	100000	35	120	75	8	16	10700	RK104M010PA20□□□
	100000	51	80	100	8	16	10700	RK104M010R800□□□
	120000	51	80	100	7	14	11000	RK124M010R800□□□
	150000	51	100	100	7	12	13200	RK154M010RA00□□□
	180000	51	120	100	7	11	15700	RK184M010RA20□□□
	220000	51	120	100	7	10	16800	RK224M010RA20□□□
	270000	63.5	120	120	6	9	19600	RK274M010SA20□□□
	330000	63.5	120	120	6	9	20500	RK334M010SA20□□□
	390000	76.2	120	150	6	8	21300	RK394M010TA20□□□
	470000	76.2	120	150	6	8	22000	RK474M010TA20□□□
	560000	76.2	140	150	5	7	23600	RK564M010TA40□□□
	680000	89	140	180	5	7	26000	RK684M010XA40□□□
	680000	89	170	180	5	7	27500	RK684M010XA70□□□
	1000000	89	220	180	5	6	30000	RK105M010XB20□□□
16	18000	35	50	60	24	44	4200	RK183M016P500□□□
	22000	35	50	60	21	36	4700	RK223M016P500□□□
	22000	35	60	60	21	36	4900	RK223M016P600□□□
	27000	35	50	60	18	29	5500	RK273M016P500□□□
	33000	35	65	60	16	24	5700	RK333M016P650□□□
	33000	35	80	60	16	24	6700	RK333M016P800□□□
	39000	35	65	60	14	20	6800	RK393M016P650□□□
	47000	35	80	60	13	18	7300	RK473M016P800□□□
	47000	35	100	60	13	18	8800	RK473M016PA00□□□
	56000	35	100	60	12	16	9000	RK563M016PA00□□□
	68000	35	100	60	12	15	9200	RK683M016PA00□□□
	68000	51	80	70	12	15	9500	RK683M016R800□□□
	82000	51	80	70	10	14	10700	RK823M016R800□□□
	100000	51	80	70	9	13	11000	RK104M016R800□□□
	100000	51	100	70	9	13	12500	RK104M016RA00□□□
	120000	51	100	70	8	12	13100	RK124M016RA00□□□
	150000	51	120	70	7	11	15500	RK154M016RA20□□□
	180000	51	120	70	6	10	15700	RK184M016RA20□□□
	220000	63.5	120	80	6	10	18000	RK224M016SA20□□□
	270000	63.5	120	80	5	9	20000	RK274M016SA20□□□
	330000	76.2	120	120	5	9	21300	RK334M016TA20□□□
	390000	76.2	120	120	5	9	21500	RK394M016TA20□□□

For further information please contact sales@capxon.org

STANDARD RATINGS

□□□ see terminal code at dimensions table

V_R (V)	C_R (µF)	ø D (mm)	L (mm)	tanδ % (+20°C) (120Hz)	Typ. ESR +20°C ▪ 120Hz (mΩ)	Max. ESR +20°C ▪ 120Hz (mΩ)	I_R ▪ Max. Ripple Current +105°C ▪ 120Hz (mA rms)	CapXon Part Number
16	470000	76.2	140	120	5	8	24200	RK474M016TA40□□□
	470000	76.2	160	120	5	8	25500	RK474M016TA60□□□
	470000	89	140	140	5	8	26500	RK474M016XA40□□□
	560000	89	140	140	4	8	28100	RK564M016XA40□□□
	680000	89	140	140	4	8	28500	RK684M016XA40□□□
	1000000	89	220	140	4	8	35000	RK105M016XB20□□□
25	10000	35	50	40	27	53	2900	RK103M025P500□□□
	12000	35	50	40	23	44	3700	RK123M025P500□□□
	15000	35	50	40	21	35	5300	RK153M025P500□□□
	15000	35	55	40	21	35	5500	RK153M025P550□□□
	18000	35	60	40	19	29	5500	RK183M025P600□□□
	22000	35	60	40	14	24	6500	RK223M025P600□□□
	22000	35	80	40	14	24	7400	RK223M025P800□□□
	27000	35	80	40	12	20	8000	RK273M025P800□□□
	33000	35	80	40	10	18	8800	RK333M025P800□□□
	33000	35	100	40	10	18	9700	RK333M025PA00□□□
	39000	35	100	40	9	17	10000	RK393M025PA00□□□
	47000	35	105	40	8	15	11000	RK473M025PA05□□□
	47000	35	120	40	8	15	11700	RK473M025PA20□□□
	47000	51	80	50	8	17	12000	RK473M025R800□□□
	56000	51	80	50	7	14	12500	RK563M025R800□□□
	68000	51	80	50	6	13	13000	RK683M025R800□□□
	68000	51	100	50	6	13	14300	RK683M025RA00□□□
	82000	51	100	50	6	12	14600	RK823M025RA00□□□
	100000	51	105	50	5	10	15000	RK104M025RA05□□□
	100000	51	120	50	5	10	16000	RK104M025RA20□□□
	100000	63.5	100	70	5	10	16300	RK104M025SA00□□□
	120000	63.5	100	70	5	9	17000	RK124M025SA00□□□
	150000	63.5	105	70	5	8	18000	RK154M025SA05□□□
	150000	63.5	120	70	5	8	19000	RK154M025SA20□□□
	180000	63.5	120	70	4	7	19500	RK184M025SA20□□□
	220000	76.2	105	80	4	6	20000	RK224M025TA05□□□
	220000	76.2	115	80	4	6	20800	RK224M025TA15□□□
	220000	76.2	120	80	4	6	21200	RK224M025TA20□□□
	270000	76.2	120	80	4	5	21700	RK274M025TA20□□□
	330000	76.2	145	80	4	5	24000	RK334M025TA45□□□
	330000	76.2	160	80	4	5	25000	RK334M025TA60□□□
	330000	89	130	130	4	5	25000	RK334M025XA30□□□
	330000	89	140	130	4	5	26000	RK334M025XA40□□□
	390000	89	140	130	4	4	26500	RK394M025XA40□□□
	470000	89	170	130	3	4	28000	RK474M025XA70□□□
	680000	89	220	130	3	4	31000	RK684M025XB20□□□

For further information please contact sales@capxon.org

STANDARD RATINGS

□□□ see terminal code at dimensions table

V_R (V)	C_R (µF)	ø D (mm)	L (mm)	tanδ % (+20°C) (120Hz)	Typ. ESR +20°C ▪ 120Hz (mΩ)	Max. ESR +20°C ▪ 120Hz (mΩ)	I_R ▪ Max. Ripple Current +105°C ▪ 120Hz (mA rms)	CapXon Part Number
35	6800	35	50	30	30	59	2600	RK682M035P500□□□
	8200	35	50	30	25	49	3300	RK822M035P500□□□
	10000	35	50	30	20	40	3600	RK103M035P500□□□
	10000	35	60	30	20	40	3800	RK103M035P600□□□
	12000	35	60	30	19	33	4800	RK123M035P600□□□
	15000	35	60	30	17	27	5600	RK153M035P600□□□
	15000	35	80	30	17	27	6000	RK153M035P800□□□
	18000	35	80	30	15	22	6300	RK183M035P800□□□
	22000	35	80	30	13	18	7600	RK223M035P800□□□
	22000	35	100	30	13	18	7900	RK223M035PA00□□□
	27000	35	100	30	11	15	8200	RK273M035PA00□□□
	33000	35	120	30	9	13	10200	RK333M035PA20□□□
	33000	51	80	50	9	13	10700	RK333M035R800□□□
	39000	51	80	50	7	12	11000	RK393M035R800□□□
	47000	51	100	50	5	11	12500	RK473M035RA00□□□
	56000	51	100	50	5	11	13000	RK563M035RA00□□□
	68000	51	120	50	5	10	14500	RK683M035RA20□□□
	82000	63.5	100	60	4	9	14800	RK823M035SA00□□□
	100000	63.5	120	60	4	9	17600	RK104M035SA20□□□
	120000	63.5	120	60	4	9	18000	RK124M035SA20□□□
	150000	76.2	120	70	4	8	20000	RK154M035TA20□□□
	180000	76.2	120	70	4	8	20500	RK184M035TA20□□□
	220000	76.2	140	70	3	7	23400	RK224M035TA40□□□
	220000	76.2	160	70	3	7	25000	RK224M035TA60□□□
	220000	89	130	90	3	7	24500	RK224M035XA30□□□
	220000	89	140	90	3	7	25000	RK224M035XA40□□□
	270000	89	140	90	3	7	25500	RK274M035XA40□□□
	330000	89	160	90	3	6	30000	RK334M035XA60□□□
	330000	89	170	90	3	6	31000	RK334M035XA70□□□
	470000	89	220	90	3	6	34000	RK474M035XB20□□□
40	10000	35	55	30	17	38	5300	RK103M040P550□□□
	15000	35	80	30	12	23	7400	RK153M040P800□□□
	22000	35	105	30	9	17	9500	RK223M040PA05□□□
	33000	51	80	50	6	12	11000	RK333M040R800□□□
	47000	51	105	50	5	10	14000	RK473M040RA05□□□
	68000	51	105	50	5	9	15000	RK683M040RA05□□□
	100000	63.5	105	60	4	8	18000	RK104M040SA05□□□
	150000	76.2	105	70	4	7	20000	RK154M040TA05□□□
	220000	76.2	143	70	3	5	24000	RK224M040TA43□□□
50	3300	35	50	25	47	100	2200	RK332M050P500□□□
	3900	35	50	25	40	85	2800	RK392M050P500□□□
	4700	35	50	25	35	71	3300	RK472M050P500□□□
	5600	35	50	25	29	59	3500	RK562M050P500□□□
	6800	35	50	25	25	49	3700	RK682M050P500□□□

For further information please contact sales@capxon.org

STANDARD RATINGS

□□□ see terminal code at dimensions table

V_R (V)	C_R (µF)	ø D (mm)	L (mm)	tanδ % (+20°C) (120Hz)	Typ. ESR +20°C ▪ 120Hz (mΩ)	Max. ESR +20°C ▪ 120Hz (mΩ)	I_R ▪ Max. Ripple Current +105°C ▪ 120Hz (mA rms)	CapXon Part Number
50	6800	35	80	25	25	49	4500	RK682M050P800□□□
	8200	35	60	25	23	40	4500	RK822M050P600□□□
	10000	35	60	25	18	33	5500	RK103M050P600□□□
	10000	35	80	25	18	33	5800	RK103M050P800□□□
	12000	35	80	25	15	28	6000	RK123M050P800□□□
	15000	35	80	25	13	22	7600	RK153M050P800□□□
	18000	35	100	25	11	18	8000	RK183M050PA00□□□
	22000	35	120	25	9	15	9800	RK223M050PA20□□□
	22000	51	80	30	9	18	10000	RK223M050R800□□□
	27000	51	80	30	8	15	10200	RK273M050R800□□□
	33000	51	100	30	7	13	11200	RK333M050RA00□□□
	33000	51	115	30	7	13	11500	RK333M050RA15□□□
	33000	51	120	30	7	13	12000	RK333M050RA20□□□
	39000	51	120	30	7	12	13200	RK393M050RA20□□□
	47000	51	120	30	6	11	14500	RK473M050RA20□□□
	47000	63.5	100	50	6	11	14500	RK473M050SA00□□□
	56000	63.5	100	50	6	9	14600	RK563M050SA00□□□
	68000	63.5	115	50	6	8	16000	RK683M050SA15□□□
	68000	63.5	120	50	6	8	16600	RK683M050SA20□□□
	82000	76.2	120	60	5	7	18900	RK823M050TA20□□□
	100000	76.2	120	60	5	7	19500	RK104M050TA20□□□
	120000	76.2	120	60	5	7	20000	RK124M050TA20□□□
	150000	89	130	80	5	7	22500	RK154M050XA30□□□
	150000	89	140	80	5	7	23900	RK154M050XA40□□□
	180000	89	140	80	4	6	24200	RK184M050XA40□□□
	180000	89	155	80	4	6	25000	RK184M050XA55□□□
	220000	89	170	80	4	6	26500	RK224M050XA70□□□
	330000	89	220	80	4	6	32000	RK334M050XB20□□□
63	2200	35	50	20	65	120	2100	RK222M063P500□□□
	2700	35	50	20	46	98	2300	RK272M063P500□□□
	3300	35	50	20	42	80	2500	RK332M063P500□□□
	3900	35	50	20	37	68	2800	RK392M063P500□□□
	4700	35	50	20	30	56	3500	RK472M063P500□□□
	4700	35	55	20	30	56	4400	RK472M063P550□□□
	5600	35	60	20	26	47	4700	RK562M063P600□□□
	6800	35	60	20	22	39	5300	RK682M063P600□□□
	6800	35	80	20	22	39	6000	RK682M063P800□□□
	8200	35	80	20	18	32	6200	RK822M063P800□□□
	10000	35	80	20	14	27	7200	RK103M063P800□□□
	10000	35	100	20	14	27	7800	RK103M063PA00□□□
	10000	35	105	20	14	27	8100	RK103M063PA05□□□
	12000	35	100	20	12	22	8300	RK123M063PA00□□□
	15000	35	120	20	10	19	8800	RK153M063PA20□□□
	15000	51	80	25	10	19	9500	RK153M063R800□□□

For further information please contact sales@capxon.org

STANDARD RATINGS

□□□ see terminal code at dimensions table

V_R (V)	C_R (µF)	ø D (mm)	L (mm)	tanδ % (+20°C) (120Hz)	Typ. ESR +20°C ▪ 120Hz (mΩ)	Max. ESR +20°C ▪ 120Hz (mΩ)	I_R ▪ Max. Ripple Current +105°C ▪ 120Hz (mA rms)	CapXon Part Number
63	18000	51	80	25	9	17	10000	RK183M063R800□□□
	22000	51	100	25	7	14	11000	RK223M063RA00□□□
	22000	51	105	25	7	14	12000	RK223M063RA05□□□
	27000	51	120	25	6	12	12500	RK273M063RA20□□□
	33000	51	120	25	6	11	14000	RK333M063RA20□□□
	33000	63.5	100	30	6	11	14500	RK333M063SA00□□□
	33000	63.5	105	30	6	11	15000	RK333M063SA05□□□
	39000	63.5	100	30	5	11	15000	RK393M063SA00□□□
	47000	63.5	105	30	5	10	17000	RK473M063SA05□□□
	56000	63.5	120	30	5	9	18000	RK563M063SA20□□□
	68000	63.5	140	30	4	8	19500	RK683M063SA40□□□
	68000	76.2	105	40	4	8	19000	RK683M063TA05□□□
	68000	76.2	120	40	4	8	20000	RK683M063TA20□□□
	82000	76.2	140	40	4	8	21000	RK823M063TA40□□□
	100000	76.2	140	40	4	7	22500	RK104M063TA40□□□
	100000	76.2	145	40	4	7	23000	RK104M063TA45□□□
	100000	89	130	60	4	7	24000	RK104M063XA30□□□
	120000	89	140	60	4	7	25000	RK124M063XA40□□□
	150000	89	160	60	4	6	27000	RK154M063XA60□□□
	150000	89	170	60	4	6	28000	RK154M063XA70□□□
	220000	89	220	60	3	5	29500	RK224M063XB20□□□
80	2200	35	50	20	63	120	2400	RK222M080P500□□□
	2700	35	50	20	45	98	2700	RK272M080P500□□□
	3300	35	50	20	40	80	3000	RK332M080P500□□□
	3900	35	60	20	35	68	3400	RK392M080P600□□□
	4700	35	60	20	28	56	4600	RK472M080P600□□□
	5600	35	80	20	25	47	5000	RK562M080P800□□□
	6800	35	80	20	21	39	5500	RK682M080P800□□□
	8200	35	100	20	17	32	6500	RK822M080PA00□□□
	10000	35	120	20	13	27	8500	RK103M080PA20□□□
	12000	51	80	20	12	22	8600	RK123M080R800□□□
	15000	51	100	20	9	18	10000	RK153M080RA00□□□
	18000	51	120	20	8	15	10500	RK183M080RA20□□□
	22000	51	100	20	7	12	13000	RK223M080RA00□□□
	22000	51	120	20	7	12	13500	RK223M080RA20□□□
	22000	63.5	100	25	7	15	13700	RK223M080SA00□□□
	27000	63.5	100	25	6	12	14000	RK273M080SA00□□□
	33000	51	140	20	6	11	14000	RK333M080RA40□□□
	33000	76.2	100	30	6	11	15000	RK333M080TA00□□□
	39000	76.2	100	30	5	10	15000	RK393M080TA00□□□
	47000	63.5	140	25	5	9	16500	RK473M080SA40□□□
	47000	76.2	120	30	5	9	16500	RK473M080TA20□□□
	56000	76.2	120	30	5	8	18500	RK563M080TA20□□□
	68000	76.2	140	30	4	7	22000	RK683M080TA40□□□
	82000	89	130	50	4	7	22500	RK823M080XA30□□□

STANDARD RATINGS

□□□ see terminal code at dimensions table

V_R (V)	C_R (µF)	ø D (mm)	L (mm)	tanδ % (+20°C) (120Hz)	Typ. ESR +20°C ▪ 120Hz (mΩ)	Max. ESR +20°C ▪ 120Hz (mΩ)	I_R ▪ Max. Ripple Current +105°C ▪ 120Hz (mA rms)	CapXon Part Number
80	100000	89	160	50	4	6	24800	RK104M080XA60□□□
	100000	89	170	50	4	6	25000	RK104M080XA70□□□
	150000	89	220	50	4	6	27000	RK154M080XB20□□□
100	1000	35	50	15	65	120	1400	RK102M100P500□□□
	1500	35	50	15	52	104	2200	RK152M100P500□□□
	1800	35	50	15	43	85	2700	RK182M100P500□□□
	2200	35	50	15	35	70	3000	RK222M100P500□□□
	2200	35	60	15	35	60	4100	RK222M100P600□□□
	2700	35	60	15	29	55	4700	RK272M100P600□□□
	3300	35	80	15	24	48	5700	RK332M100P800□□□
	3900	35	80	15	21	42	6000	RK392M100P800□□□
	4700	35	100	15	18	35	6500	RK472M100PA00□□□
	4700	35	105	15	18	35	6700	RK472M100PA05□□□
	4700	51	80	20	18	35	6500	RK472M100R800□□□
	5600	35	100	15	15	30	6800	RK562M100PA00□□□
	6800	35	120	15	12	24	7000	RK682M100PA20□□□
	6800	51	80	20	12	24	8700	RK682M100R800□□□
	6800	51	100	20	12	19	9500	RK682M100RA00□□□
	8200	51	80	20	9	32	10000	RK822M100R800□□□
	10000	51	100	20	7	14	10500	RK103M100RA00□□□
	10000	51	105	20	7	14	11000	RK103M100RA05□□□
	10000	51	120	20	7	14	12500	RK103M100RA20□□□
	12000	51	120	20	6	12	13000	RK123M100RA20□□□
	15000	63.5	100	25	5	10	14500	RK153M100SA00□□□
	15000	63.5	105	25	5	10	15000	RK153M100SA05□□□
	15000	63.5	120	25	5	10	16000	RK153M100SA20□□□
	18000	63.5	100	25	5	10	16000	RK183M100SA00□□□
	22000	63.5	120	25	5	9	16500	RK223M100SA20□□□
	22000	76.2	100	30	5	9	16500	RK223M100TA00□□□
	22000	76.2	105	30	5	9	17000	RK223M100TA05□□□
	22000	76.2	120	30	5	9	18000	RK223M100TA20□□□
	27000	76.2	120	30	4	9	18500	RK273M100TA20□□□
	33000	76.2	120	30	4	8	16000	RK333M100TA20□□□
	33000	76.2	130	30	4	8	19500	RK333M100TA30□□□
	33000	76.2	140	30	4	8	20500	RK333M100TA40□□□
	33000	76.2	145	30	4	8	21000	RK333M100TA45□□□
	39000	76.2	140	30	4	8	21000	RK393M100TA40□□□
	47000	76.2	160	30	4	8	23000	RK473M100TA60□□□
	47000	89	130	30	4	8	22000	RK473M100XA30□□□
	47000	89	140	30	4	8	23500	RK473M100XA40□□□
	56000	89	140	30	3	7	24000	RK563M100XA40□□□
	68000	89	160	30	3	7	25500	RK683M100XA60□□□
	68000	89	170	30	3	7	26000	RK683M100XA70□□□
	100000	89	220	30	3	7	28000	RK104M100XB20□□□
	100000	89	230	30	3	7	30000	RK104M100XB30□□□

For further information please contact sales@capxon.org

DIMENSIONS ▪ Ring clamp mounting ▪ All dimensions in mm

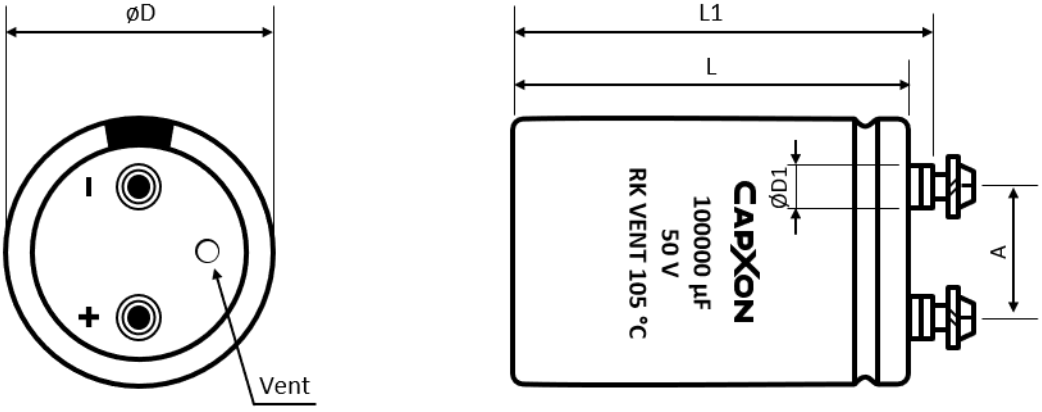

Terminal	Dimensions (mm) with insulating sleeve					Min. Full Thread (mm)	Max. Torque (Nm)	Terminal code
	D ± 2	L ± 3	L1 ± 3	D1 max.	A ± 0.5			
M5	35	50 ~ 120	56.5 ~ 126.5	8.3	12.7	8	2	A50
M5	51	50 ~ 140	56.5 ~ 146.5	10.3	22	8	2	A50
M5	63.5	80 ~ 140	86.5 ~ 146.5	10.3	28.6	8	2	A50
M5	63.5	80 ~ 140	86.5 ~ 146.5	13	28.6	8	2	A53
M5	76.2	100 ~ 240	106.5 ~ 246.5	10.3	31.8	12	2.5	A50
M5	76.2	100 ~ 240	106.5 ~ 246.5	13	31.8	12	2.5	A53
M6	76.2	100 ~ 240	106.5 ~ 246.5	13	31.8	12	2.5	A63
M6	76.2	100 ~ 240	106.5 ~ 246.5	17.5	31.8	12	2.5	A67
M6	89	100 ~ 240	106.5 ~ 246.5	13	31.8	12	2.5	A63
M6	89	100 ~ 240	106.5 ~ 246.5	17.5	31.8	12	2.5	A67

DIMENSIONS ▪ Threaded stud mounting ▪ All dimensions in mm

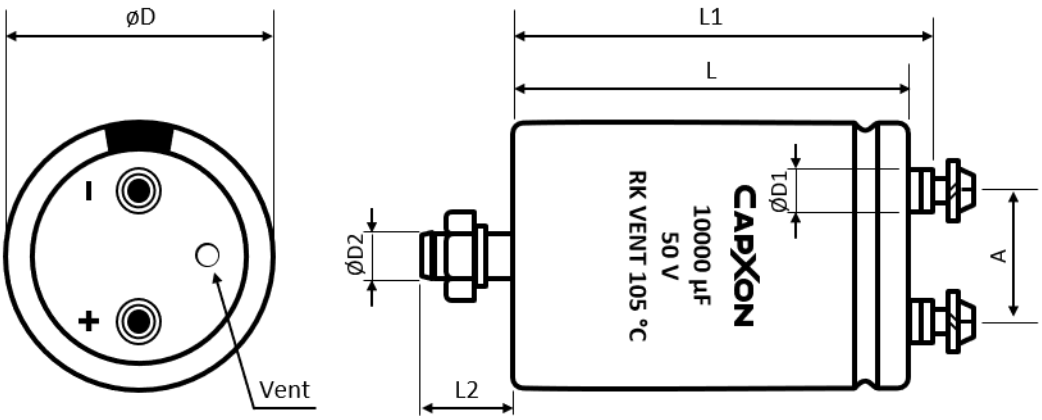

For further information please contact sales@capxon.org

DIMENSIONS ▪ Threaded stud mounting ▪ All dimensions in mm

Terminal	Dimensions (mm) with insulating sleeve							Min. Full Thread (mm)	Max. Torque (Nm)	Terminal code
	D ± 2	L ± 3	L1 ± 3	L2 ± 1	D1 max.	D2	A ± 0.5			
M5	35	50 ~ 120	56.5 ~ 126.5	12	8.3	M8	12.7	8	2	E50
M5	51	50 ~ 140	56.5 ~ 146.5	16	10.3	M12	22	8	2	E50
M5	63.5	80 ~ 140	86.5 ~ 146.5	16	10.3	M12	28.6	8	2	E50
M5	63.5	80 ~ 140	86.5 ~ 146.5	16	13	M12	28.6	8	2	E53
M5	76.2	100 ~ 240	106.5 ~ 246.5	16	10.3	M12	31.8	12	2.5	E50
M5	76.2	100 ~ 240	106.5 ~ 246.5	16	13	M12	31.8	12	2.5	E53
M6	76.2	100 ~ 240	106.5 ~ 246.5	16	13	M12	31.8	12	2.5	E63
M6	76.2	100 ~ 240	106.5 ~ 246.5	16	17.5	M12	31.8	12	2.5	E67
M6	89	100 ~ 240	106.5 ~ 246.5	16	13	M12	31.8	12	2.5	E63
M6	89	100 ~ 240	106.5 ~ 246.5	16	17.5	M12	31.8	12	2.5	E67

ACCESSORIES

- The capacitors are supplied with suitable screws, serrated washers and plain washers. Accessories are not fastened to the capacitor.
- Suitable ring clamps and further assembly material see additional information “Accessories”.

MULTIPLIER K_f FOR RIPPLE CURRENT VS. FREQUENCY

V_R (V)	ØD (mm)	Frequency (Hz)				
		50/60	100/120	1k	10k	≥ 50k
10 ~ 50	35 ~ 89	0.95	1	1.05	1.09	1.12
63 ~ 80	35	0.9	1	1.1	1.18	1.22
	50 ~ 89	0.95	1	1.05	1.09	1.12
100	35	0.8	1	1.22	1.3	1.33
	50	0.9	1	1.1	1.18	1.22
	63.5 ~ 89	0.95	1	1.05	1.09	1.12

PRECAUTIONS, GUIDELINES AND PACKAGING INFORMATON

Unless otherwise agreed in individual specifications, all products are subject to our “General Precautions and Guidelines” as well as our “Packaging Information”. Please refer to the following pages in the table.

	
General Precautions and Guidelines	Packaging Information Liquid Screw
Page 837	Page 681

For further information please contact sales@capxon.org

USEFUL LIFE

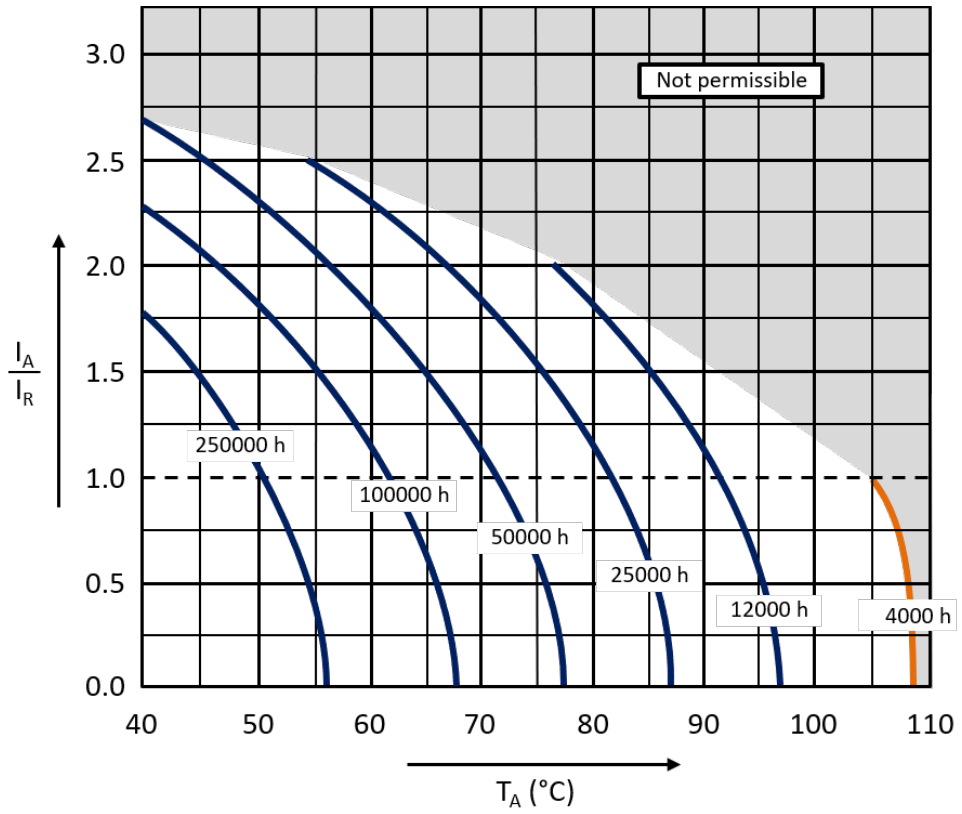

With: I_A: Actual application current
I_R: Maximum permissible rated ripple current (A RMS)
T_A: Ambient temperature of the capacitor

DISCLAIMER

All product related data (e.g. specification, statements and general information) are subject to change without any notice. It is necessary that the customer observes all product related technical / application information and handling instructions.

CapXon products are designed and manufactured according to severe quality and safety standards. Under no circumstance, CapXon warrants that any CapXon product is suitable for the purposes intended for your application, even CapXon knows the application. It is customer's duty and obligation to check and make sure that CapXon products are suitable for the purposes intended and select the correct and proper CapXon product. Customers are requested to perform a sufficient validation and reliability evaluation to assure needed safety level and reliability performance by suitable designs and to apply proper safeguards (e.g. redundancies, protective circuits).

Particular operating conditions (ambient temperature, ripple current, voltage, thermal resistance, etc.) as well as storage, production or assembly may affect the performance and the lifetime of the capacitor. Please consult CapXon for lifetime estimation, failure mode considerations or worst-case scenarios according to the product technology, product tolerances / deviations or change of the characteristics of the capacitor due to shipment, storage, handling, production and usage.

For aerospace or military application, life-saving, life-sustaining, safety critical applications or any application where failure may cause severe personal injury or death, please consult us before design-in the capacitor in your application.

Except for the written expressed warranties, CapXon does not impliedly, by assumption or whatever else, warrant, undertake, promise any other warranty or guaranty for any CapXon product.

For further information, please visit our website www.capxongroup.com or contact CapXon directly.

RM SERIES ▪ STANDARD 105°C TYPE



KEY FEATURES

HIGH VOLTAGE

- **ALUMINUM ELECTROLYTIC CAPACITOR** ▪ Screw terminal type
- Useful life: 105°C ▪ 6000 hours
- Wide capacitance range
- All-welded construction ensures highest reliability
- Bottom cooling possible due to the thermal construction

HF Halogen Free

RoHS & REACH COMPLIANT

SPECIFICATIONS

Items		Performance Characteristics		
Operating Temperature Range		-40 ~ +105°C	-25 ~ +105°C	
Rated Voltage Range	V_R	160 ~ 450V DC	500V DC	
Surge Voltage	V_S	($V_R \le 315V$): $V_S = 1.15 \cdot V_R$	($V_R > 315V$): $V_S = 1.10 \cdot V_R$	
Capacitance Range	C_R	180 ~ 68000µF	330 ~ 10000µF	
Cap. Tolerance	ΔC	±20% (120Hz ▪ 20°C)		
Leakage Current (20°C ▪ V_R applied)	I_{LEAK}	$\le 0.018 \cdot (C_R \cdot V_R)^{0.85} + 4$ (µA) or 5mA (whichever is smaller) ▪ After 5 minutes [I_{LEAK} (µA) ; C_R (µF) ; V_R (V)]		
Dissipation Factor % (20°C ▪ 120Hz)	tanδ	V_R (V DC)	160 ~ 450	500
		tanδ	15	20
Low Temperature Characteristics at 120Hz	Z ratio max.	V_R (V DC)	160 ~ 450	500
		Z-25°C/Z+20°C	4	4
		Z-40°C/Z+20°C	10	-

Lifetime Test		
Useful Life 105°C (V_R & I_R applied)	Test	**6000 hours**
	△C/C_R	≤ ±15% of initial measured value
	tanδ	≤ 175% of initial specified value
	I_{Leak}	≤ the initial specified value
	Deviation Rate @ Useful Life: 10 000 FIT = 1%/1000h with 60% confidence level ▪ parts show higher drift as test criteria	
Endurance 105°C (V_R & I_R applied)	Test	**2000 hours**
	△C/C_R	≤ ±10% of initial measured value
	tanδ	≤ 130% of initial specified value
	I_{Leak}	≤ the initial specified value
Shelf Life 105°C (V_R = 0)	Test	**1000 hours**
	△C/C_R	≤ ±10% of initial measured value
	tanδ	≤ 130% of initial specified value
	I_{Leak}	≤ the initial specified value
	Before measurement: Restore capacitor to 20°C, apply V_R for 30 min according JIS-C-5101-4	
Vibration Resistance Test	Max. 10g force, f_{RANGE} 10Hz … 55Hz, amplitude 0.75mm; X/Y/Z-axis each 2h; capacitor rigidly clamped by body to surface ▪ IEC 60068-2-6	

For further information please contact sales@capxon.org

STANDARD RATINGS

□□□ see terminal code at dimensions table

V_R (V)	C_R (µF)	ø D (mm)	L (mm)	Typ. ESR +20°C ▪ 120Hz (mΩ)	Max. ESR +20°C ▪ 120Hz (mΩ)	I_R ▪ Max. Ripple Current +105°C ▪ 120Hz (mA rms)	CapXon Part Number
160	470	35	50	230	420	1100	RM471M160P500□□□
	560	35	50	200	360	1300	RM561M160P500□□□
	680	35	50	160	290	1400	RM681M160P500□□□
	820	35	50	130	240	1500	RM821M160P500□□□
	1000	35	50	110	200	1600	RM102M160P500□□□
	1200	35	60	94	170	2000	RM122M160P600□□□
	1500	35	60	72	130	2200	RM152M160P600□□□
	1800	35	80	61	110	2600	RM182M160P800□□□
	2200	35	80	50	90	2900	RM222M160P800□□□
	2700	35	100	41	74	3400	RM272M160PA00□□□
	3300	51	75	33	60	3900	RM332M160R750□□□
	3900	51	75	28	51	4000	RM392M160R750□□□
	4700	51	96	24	42	4700	RM472M160R960□□□
	5600	51	96	20	36	5200	RM562M160R960□□□
	6800	51	120	16	29	6200	RM682M160RA20□□□
	6800	63.5	96	16	29	6200	RM682M160S960□□□
	8200	63.5	96	13	24	7100	RM822M160S960□□□
	10000	63.5	120	11	20	8500	RM103M160SA20□□□
	10000	76.2	96	11	20	8500	RM103M160T960□□□
	12000	76.2	100	9	17	9500	RM123M160TA00□□□
	15000	76.2	120	7	13	11500	RM153M160TA20□□□
	18000	76.2	140	6	11	13500	RM183M160TA40□□□
	22000	76.2	140	5	9	14000	RM223M160TA40□□□
	22000	89	130	5	9	14800	RM223M160XA30□□□
	27000	89	140	4	8	16100	RM273M160XA40□□□
	33000	89	140	3	7	16600	RM333M160XA40□□□
	47000	89	220	3	7	17500	RM473M160XB20□□□
	68000	100	250	2	6	19300	RM683M160DB50□□□
200	330	35	50	330	600	1000	RM331M200P500□□□
	390	35	50	280	510	1100	RM391M200P500□□□
	470	35	50	230	420	1200	RM471M200P500□□□
	560	35	50	200	360	1400	RM561M200P500□□□
	680	35	50	160	290	1500	RM681M200P500□□□
	820	35	50	130	240	1600	RM821M200P500□□□
	1000	35	60	110	200	1800	RM102M200P600□□□
	1200	35	60	94	170	2100	RM122M200P600□□□
	1500	35	80	72	130	2300	RM152M200P800□□□
	1800	35	80	61	110	2700	RM182M200P800□□□
	2200	35	100	50	90	3100	RM222M200PA00□□□
	2200	51	75	50	90	3200	RM222M200R750□□□
	2700	35	120	41	74	3700	RM272M200PA20□□□
	2700	51	96	41	74	3700	RM272M200R960□□□
	3300	51	80	33	60	4200	RM332M200R800□□□
	3900	51	100	28	51	5000	RM392M200RA00□□□

For further information please contact sales@capxon.org

STANDARD RATINGS

□□□ see terminal code at dimensions table

V_R (V)	C_R (µF)	ø D (mm)	L (mm)	Typ. ESR +20°C ▪ 120Hz (mΩ)	Max. ESR +20°C ▪ 120Hz (mΩ)	I_R ▪ Max. Ripple Current +105°C ▪ 120Hz (mA rms)	CapXon Part Number
200	4700	51	140	24	42	5800	RM472M200RA40□□□
	4700	63.5	96	24	42	5400	RM472M200S960□□□
	5600	63.5	96	20	36	5900	RM562M200S960□□□
	6800	63.5	115	16	29	7000	RM682M200SA15□□□
	8200	63.5	120	13	24	7700	RM822M200SA20□□□
	10000	76.2	115	11	20	9700	RM103M200TA15□□□
	12000	76.2	120	9	17	10300	RM123M200TA20□□□
	15000	76.2	140	7	13	11600	RM153M200TA40□□□
	15000	89	130	7	13	12300	RM153M200XA30□□□
	18000	89	140	6	11	13600	RM183M200XA40□□□
	22000	76.2	160	5	9	14000	RM223M200TA60□□□
	22000	89	140	5	9	15200	RM223M200XA40□□□
	33000	89	220	4	6	16600	RM333M200XB20□□□
	47000	89	250	3	5	19900	RM473M200XB50□□□
250	270	35	50	410	740	900	RM271M250P500□□□
	330	35	50	330	600	1100	RM331M250P500□□□
	390	35	50	280	510	1200	RM391M250P500□□□
	470	35	50	230	420	1300	RM471M250P500□□□
	560	35	50	200	360	1500	RM561M250P500□□□
	680	35	60	160	290	1600	RM681M250P600□□□
	820	35	80	130	240	1700	RM821M250P800□□□
	1000	35	80	110	200	1900	RM102M250P800□□□
	1200	35	80	94	170	2200	RM122M250P800□□□
	1500	35	100	72	130	2400	RM152M250PA00□□□
	1500	51	75	72	130	2500	RM152M250R750□□□
	1800	35	120	61	110	2800	RM182M250PA20□□□
	1800	51	75	61	110	2800	RM182M250R750□□□
	2200	51	96	50	90	3300	RM222M250R960□□□
	2700	51	100	41	74	3800	RM272M250RA00□□□
	3300	51	120	33	60	4300	RM332M250RA20□□□
	3300	63.5	96	33	60	4300	RM332M250S960□□□
	3900	51	120	28	51	5100	RM392M250RA20□□□
	3900	63.5	96	28	51	4700	RM392M250S960□□□
	4700	63.5	115	24	42	5800	RM472M250SA15□□□
	5600	63.5	120	20	36	6400	RM562M250SA20□□□
	6800	76.2	115	16	29	7800	RM682M250TA15□□□
	8200	76.2	120	13	24	8500	RM822M250TA20□□□
	10000	76.2	140	11	20	10100	RM103M250TA40□□□
	10000	89	140	11	20	10300	RM103M250XA40□□□
	12000	89	140	9	17	12000	RM123M250XA40□□□
	15000	89	157	7	13	12600	RM153M250XA57□□□
	22000	89	220	5	9	15500	RM223M250XB20□□□
	33000	100	250	3	6	17100	RM333M250DB50□□□

STANDARD RATINGS

□□□ see terminal code at dimensions table

V_R (V)	C_R (µF)	ø D (mm)	L (mm)	Typ. ESR +20°C ▪ 120Hz (mΩ)	Max. ESR +20°C ▪ 120Hz (mΩ)	I_R ▪ Max. Ripple Current +105°C ▪ 120Hz (mA rms)	CapXon Part Number
315	180	35	50	620	1110	800	RM181M315P500□□□
	220	35	50	500	900	1000	RM221M315P500□□□
	270	35	50	410	740	1100	RM271M315P500□□□
	330	35	50	330	600	1200	RM331M315P500□□□
	390	35	50	280	510	1300	RM391M315P500□□□
	470	35	60	230	420	1500	RM471M315P600□□□
	560	35	55	200	360	2500	RM561M315P550□□□
	680	35	65	160	290	3000	RM681M315P650□□□
	820	35	75	130	240	3400	RM821M315P750□□□
	1000	35	80	110	200	3900	RM102M315P800□□□
	1200	35	100	94	170	4600	RM122M315PA00□□□
	1500	51	70	72	130	5500	RM152M315R700□□□
	1800	51	75	61	110	6100	RM182M315R750□□□
	2200	51	90	50	90	7300	RM222M315R900□□□
	2700	51	100	41	74	8500	RM272M315RA00□□□
	3300	63.5	85	33	60	10000	RM332M315S850□□□
	3900	63.5	96	28	51	11400	RM392M315S960□□□
	4700	76.2	85	24	42	13200	RM472M315T850□□□
	5600	76.2	96	20	36	15100	RM562M315T960□□□
	6800	76.2	110	16	29	17700	RM682M315TA10□□□
	8200	89	100	13	24	17800	RM822M315XA00□□□
	10000	89	115	11	20	20200	RM103M315XA15□□□
350	180	35	50	620	1110	900	RM181M350P500□□□
	220	35	50	500	900	1100	RM221M350P500□□□
	270	35	50	410	740	1200	RM271M350P500□□□
	330	35	50	330	600	1300	RM331M350P500□□□
	390	35	60	280	510	1400	RM391M350P600□□□
	470	35	55	230	420	2300	RM471M350P550□□□
	560	35	60	200	360	2600	RM561M350P600□□□
	680	35	70	160	290	3100	RM681M350P700□□□
	820	35	80	130	240	3500	RM821M350P800□□□
	1000	35	90	110	200	4100	RM102M350P900□□□
	1000	51	75	110	200	4300	RM102M350R750□□□
	1200	51	65	94	170	4700	RM122M350R650□□□
	1500	51	75	72	130	5600	RM152M350R750□□□
	1800	51	85	61	110	6500	RM182M350R850□□□
	2200	51	100	50	90	7700	RM222M350RA00□□□
	2700	51	105	41	74	8700	RM272M350RA05□□□
	2700	63.5	80	41	74	8800	RM272M350S800□□□
	3300	51	130	33	60	10100	RM332M350RA30□□□
	3300	63.5	96	33	60	10100	RM332M350S960□□□
	3900	63.5	105	28	51	11200	RM392M350SA05□□□
	3900	76.2	80	28	51	11800	RM392M350T800□□□
	4700	63.5	130	24	42	12700	RM472M350SA30□□□

For further information please contact sales@capxon.org

STANDARD RATINGS

□□□ see terminal code at dimensions table

V_R (V)	C_R (µF)	ø D (mm)	L (mm)	Typ. ESR +20°C ▪ 120Hz (mΩ)	Max. ESR +20°C ▪ 120Hz (mΩ)	I_R ▪ Max. Ripple Current +105°C ▪ 120Hz (mA rms)	CapXon Part Number
350	4700	76.2	96	24	42	13300	RM472M350T960□□□
	5600	63.5	130	20	36	14200	RM562M350SA30□□□
	5600	76.2	105	20	36	15700	RM562M350TA05□□□
	6800	76.2	125	16	29	18700	RM682M350TA25□□□
	6800	89	120	16	29	18800	RM682M350XA20□□□
	8200	76.2	143	13	24	19000	RM822M350TA43□□□
	8200	89	115	13	24	18900	RM822M350XA15□□□
	10000	76.2	160	11	20	19500	RM103M350TA60□□□
	10000	89	140	11	20	21000	RM103M350XA40□□□
	12000	76.2	190	9	17	24800	RM123M350TA90□□□
	12000	89	145	9	17	25700	RM123M350XA45□□□
	15000	76.2	220	7	13	29100	RM153M350TB20□□□
	15000	89	170	7	13	29600	RM153M350XA70□□□
	18000	89	200	6	11	33200	RM183M350XB00□□□
400	180	35	50	620	1110	1000	RM181M400P500□□□
	220	35	50	500	900	1200	RM221M400P500□□□
	270	35	50	410	740	1300	RM271M400P500□□□
	330	35	60	330	600	1500	RM331M400P600□□□
	390	35	55	280	510	2100	RM391M400P550□□□
	470	35	60	230	420	2400	RM471M400P600□□□
	560	35	70	200	360	2800	RM561M400P700□□□
	680	51	80	160	290	3700	RM681M400R800□□□
	820	35	90	130	240	3700	RM821M400P900□□□
	1000	51	65	110	200	4400	RM102M400R650□□□
	1200	51	75	94	170	5000	RM122M400R750□□□
	1500	51	85	72	130	5800	RM152M400R850□□□
	1800	51	96	61	110	7000	RM182M400R960□□□
	2200	51	115	50	90	8100	RM222M400RA15□□□
	2200	63.5	85	50	90	8200	RM222M400S850□□□
	2700	51	130	41	74	9400	RM272M400RA30□□□
	2700	63.5	96	41	74	9300	RM272M400S960□□□
	3300	63.5	105	33	60	10800	RM332M400SA05□□□
	3300	76.2	105	33	60	11300	RM332M400TA05□□□
	3900	63.5	118	28	51	11800	RM392M400SA18□□□
	3900	76.2	105	28	51	12300	RM392M400TA05□□□
	4700	63.5	143	24	42	13500	RM472M400SA43□□□
	4700	76.2	105	24	42	14400	RM472M400TA05□□□
	4700	89	97	24	42	14900	RM472M400X970□□□
	5600	63.5	195	20	36	17200	RM562M400SA95□□□
	5600	76.2	130	20	36	15800	RM562M400TA30□□□
	5600	89	96	20	36	15300	RM562M400X960□□□
	6800	76.2	143	16	29	19000	RM682M400TA43□□□
	6800	89	115	16	29	18900	RM682M400XA15□□□
	8200	76.2	170	13	24	20600	RM822M400TA70□□□

For further information please contact sales@capxon.org

STANDARD RATINGS

□□□ see terminal code at dimensions table

V_R (V)	C_R (µF)	ø D (mm)	L (mm)	Typ. ESR +20°C ▪ 120Hz (mΩ)	Max. ESR +20°C ▪ 120Hz (mΩ)	I_R ▪ Max. Ripple Current +105°C ▪ 120Hz (mA rms)	CapXon Part Number
400	8200	89	130	13	24	19300	RM822M400XA30□□□
	10000	76.2	190	11	20	21800	RM103M400TA90□□□
	10000	89	160	11	20	22000	RM103M400XA60□□□
	12000	76.2	220	9	17	27000	RM123M400TB20□□□
	12000	89	180	9	17	26000	RM123M400XA80□□□
	15000	89	200	7	13	29700	RM153M400XB00□□□
450	220	35	50	500	900	1200	RM221M450P500□□□
	330	35	55	330	600	1900	RM331M450P550□□□
	390	35	65	280	510	2300	RM391M450P650□□□
	470	35	75	230	420	2600	RM471M450P750□□□
	560	35	80	200	360	2900	RM561M450P800□□□
	680	35	100	160	290	3600	RM681M450PA00□□□
	680	51	80	160	290	3800	RM681M450R800□□□
	820	35	110	130	240	4200	RM821M450PA10□□□
	1000	51	80	110	200	4700	RM102M450R800□□□
	1200	51	90	94	170	5400	RM122M450R900□□□
	1500	51	105	72	130	6800	RM152M450RA05□□□
	1500	63.5	80	72	130	7000	RM152M450S800□□□
	1800	51	130	61	110	7800	RM182M450RA30□□□
	1800	63.5	96	61	110	7800	RM182M450S960□□□
	2200	63.5	96	50	90	8600	RM222M450S960□□□
	2700	63.5	118	41	74	10200	RM272M450SA18□□□
	2700	76.2	96	41	74	10700	RM272M450T960□□□
	3300	63.5	145	33	60	11500	RM332M450SA45□□□
	3300	76.2	120	33	60	11000	RM332M450TA20□□□
	3300	89	97	33	60	13100	RM332M450X970□□□
	3900	76.2	130	28	51	13400	RM392M450TA30□□□
	3900	89	120	28	51	14900	RM392M450XA20□□□
	4700	76.2	120	24	42	14500	RM472M450TA20□□□
	4700	89	120	24	42	16700	RM472M450XA20□□□
	5600	76.2	160	20	36	15900	RM562M450TA60□□□
	5600	89	120	20	36	15400	RM562M450XA20□□□
	6800	76.2	160	16	29	19100	RM682M450TA60□□□
	6800	89	140	16	29	19200	RM682M450XA40□□□
	8200	76.2	220	13	24	23100	RM822M450TB20□□□
	8200	89	170	13	24	23700	RM822M450XA70□□□
	10000	89	200	11	20	24000	RM103M450XB00□□□
500	330	51	80	440	800	2800	RM331M500R800□□□
	470	51	60	310	560	2700	RM471M500R600□□□
	680	51	80	220	390	4100	RM681M500R800□□□
	820	51	85	180	320	4300	RM821M500R850□□□
	1000	51	105	150	270	4800	RM102M500RA05□□□
	1200	51	120	120	220	6000	RM122M500RA20□□□
	1200	63.5	85	120	220	5800	RM122M500S850□□□

STANDARD RATINGS

□□□ see terminal code at dimensions table

V_R (V)	C_R (µF)	ø D (mm)	L (mm)	Typ. ESR +20°C ▪ 120Hz (mΩ)	Max. ESR +20°C ▪ 120Hz (mΩ)	I_R ▪ Max. Ripple Current +105°C ▪ 120Hz (mA rms)	CapXon Part Number
500	1500	51	130	100	180	7000	RM152M500RA30□□□
	1500	63.5	96	100	180	7100	RM152M500S960□□□
	1800	63.5	105	83	150	7900	RM182M500SA05□□□
	2200	63.5	130	67	120	9400	RM222M500SA30□□□
	2200	76.2	96	67	120	9500	RM222M500T960□□□
	2700	63.5	145	55	98	10300	RM272M500SA45□□□
	2700	76.2	105	55	98	10800	RM272M500TA05□□□
	2700	89	97	55	98	11600	RM272M500X970□□□
	3300	63.5	170	45	80	13000	RM332M500SA70□□□
	3300	76.2	130	45	80	12200	RM332M500TA30□□□
	3300	89	120	45	80	13400	RM332M500XA20□□□
	3900	76.2	145	38	68	13500	RM392M500TA45□□□
	3900	89	120	38	68	15000	RM392M500XA20□□□
	4700	76.2	170	31	56	16000	RM472M500TA70□□□
	4700	89	145	31	56	16800	RM472M500XA45□□□
	5600	76.2	220	26	47	18100	RM562M500TB20□□□
	5600	89	150	26	47	17900	RM562M500XA50□□□
	6800	89	170	22	39	20800	RM682M500XA70□□□
	8200	89	220	18	32	25600	RM822M500XB20□□□
	10000	89	250	15	27	30000	RM103M500XB50□□□

For further information please contact sales@capxon.org

DIMENSIONS ▪ Ring clamp mounting ▪ All dimensions in mm

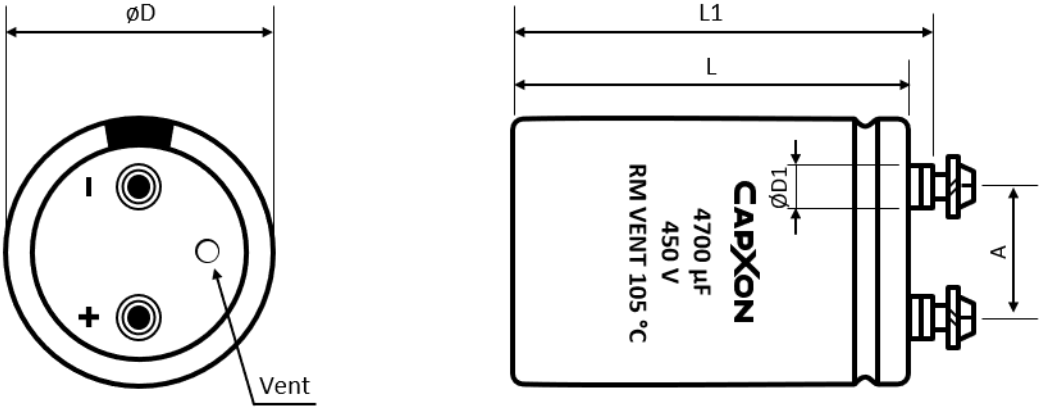

Terminal	Dimensions (mm) with insulating sleeve					Min. Full Thread (mm)	Max. Torque (Nm)	Terminal code
	D ± 2	L ± 3	L1 ± 3	D1 max.	A ± 0.5			
M5	35	50 ~ 120	56.5 ~ 126.5	8.3	12.7	8	2	A50
M5	51	50 ~ 140	56.5 ~ 146.5	10.3	22	8	2	A50
M5	63.5	80 ~ 140	86.5 ~ 146.5	10.3	28.6	8	2	A50
M5	63.5	80 ~ 140	86.5 ~ 146.5	13	28.6	8	2	A53
M5	76.2	100 ~ 240	106.5 ~ 246.5	10.3	31.8	12	2.5	A50
M5	76.2	100 ~ 240	106.5 ~ 246.5	13	31.8	12	2.5	A53
M6	76.2	100 ~ 240	106.5 ~ 246.5	13	31.8	12	2.5	A63
M6	76.2	100 ~ 240	106.5 ~ 246.5	17.5	31.8	12	2.5	A67
M6	89	100 ~ 240	106.5 ~ 246.5	13	31.8	12	2.5	A63
M6	89	100 ~ 240	106.5 ~ 246.5	17.5	31.8	12	2.5	A67
M8	100	100 ~ 240	110 ~ 250	17.5	41.5	16	5	A87

DIMENSIONS ▪ Threaded stud mounting ▪ All dimensions in mm

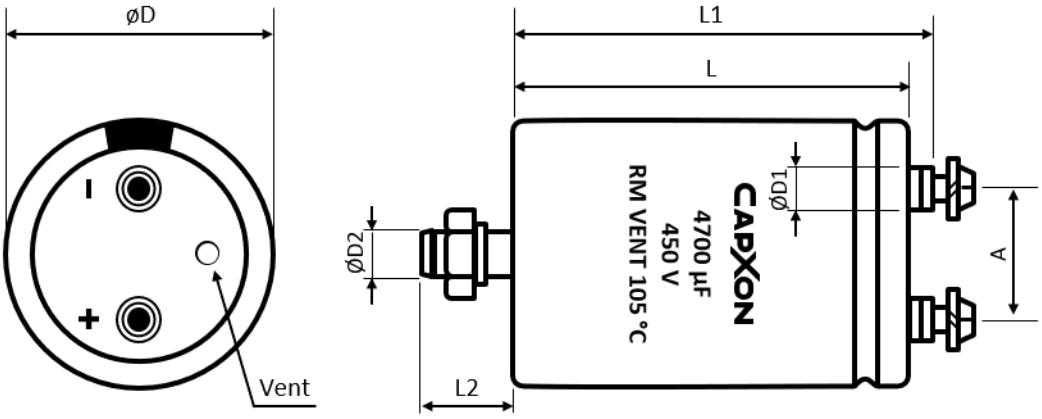

For further information please contact sales@capxon.org

DIMENSIONS ▪ Threaded stud mounting ▪ All dimensions in mm

Terminal	Dimensions (mm) with insulating sleeve							Min. Full Thread (mm)	Max. Torque (Nm)	Terminal code
	D ± 2	L ± 3	L1 ± 3	L2 ± 1	D1 max.	D2	A ± 0.5			
M5	35	50 ~ 120	56.5 ~ 126.5	12	8.3	M8	12.7	8	2	E50
M5	51	50 ~ 140	56.5 ~ 146.5	16	10.3	M12	22	8	2	E50
M5	63.5	80 ~ 140	86.5 ~ 146.5	16	10.3	M12	28.6	8	2	E50
M5	63.5	80 ~ 140	86.5 ~ 146.5	16	13	M12	28.6	8	2	E53
M5	76.2	100 ~ 240	106.5 ~ 246.5	16	10.3	M12	31.8	12	2.5	E50
M5	76.2	100 ~ 240	106.5 ~ 246.5	16	13	M12	31.8	12	2.5	E53
M6	76.2	100 ~ 240	106.5 ~ 246.5	16	13	M12	31.8	12	2.5	E63
M6	76.2	100 ~ 240	106.5 ~ 246.5	16	17.5	M12	31.8	12	2.5	E67
M6	89	100 ~ 240	106.5 ~ 246.5	16	13	M12	31.8	12	2.5	E63
M6	89	100 ~ 240	106.5 ~ 246.5	16	17.5	M12	31.8	12	2.5	E67
M8	100	100 ~ 240	110 ~ 250	16	17.5	M12	41.5	16	5	E87

ACCESSORIES

- The capacitors are supplied with suitable screws, serrated washers and plain washers. Accessories are not fastened to the capacitor.
- Suitable ring clamps and further assembly material see additional information “Accessories”.

MULTIPLIER K_f for RIPPLE CURRENT vs. FREQUENCY

Frequency (Hz)	50/60	100/120	300	1k	≥ 3k
K_f	0.8	1	1.2	1.3	1.4

PRECAUTIONS, GUIDELINES AND PACKAGING INFORMATON

Unless otherwise agreed in individual specifications, all products are subject to our “General Precautions and Guidelines” as well as our “Packaging Information”. Please refer to the following pages in the table.

General Precautions and Guidelines	Packaging Information Liquid Screw
Page 837	Page 681

For further information please contact sales@capxon.org

USEFUL LIFE

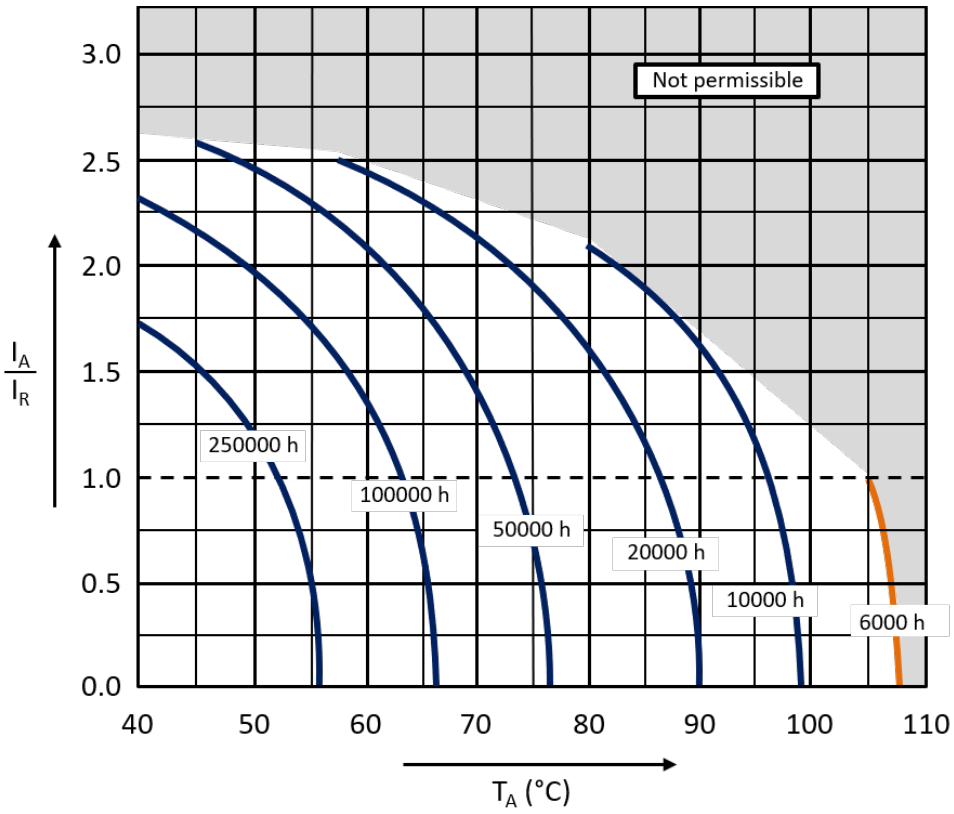

With: I_A: Actual application current
I_R: Maximum permissible rated ripple current (A RMS)
T_A: Ambient temperature of the capacitor

DISCLAIMER

All product related data (e.g. specification, statements and general information) are subject to change without any notice. It is necessary that the customer observes all product related technical / application information and handling instructions.

CapXon products are designed and manufactured according to severe quality and safety standards. Under no circumstance, CapXon warrants that any CapXon product is suitable for the purposes intended for your application, even CapXon knows the application. It is customer's duty and obligation to check and make sure that CapXon products are suitable for the purposes intended and select the correct and proper CapXon product. Customers are requested to perform a sufficient validation and reliability evaluation to assure needed safety level and reliability performance by suitable designs and to apply proper safeguards (e.g. redundancies, protective circuits).

Particular operating conditions (ambient temperature, ripple current, voltage, thermal resistance, etc.) as well as storage, production or assembly may affect the performance and the lifetime of the capacitor. Please consult CapXon for lifetime estimation, failure mode considerations or worst-case scenarios according to the product technology, product tolerances / deviations or change of the characteristics of the capacitor due to shipment, storage, handling, production and usage.

For aerospace or military application, life-saving, life-sustaining, safety critical applications or any application where failure may cause severe personal injury or death, please consult us before design-in the capacitor in your application.

Except for the written expressed warranties, CapXon does not impliedly, by assumption or whatever else, warrant, undertake, promise any other warranty or guaranty for any CapXon product.

For further information, please visit our website www.capxongroup.com or contact CapXon directly.

RH SERIES ▪ LONG LIFE 105°C TYPE



KEY FEATURES

HIGH VOLTAGE LONG LIFE

- **ALUMINUM ELECTROLYTIC CAPACITOR** ▪ Screw terminal type
- Useful life: 105°C ▪ 8000 hours
- Wide capacitance range
- All-welded construction ensures highest reliability
- Bottom cooling possible due to the thermal construction

SPECIFICATIONS

Items		Performance Characteristics	
Operating Temperature Range		-40 ~ +105°C	
Rated Voltage Range	V_R	160 ~ 450V DC	
Surge Voltage	V_S	$V_S = 1.10 \cdot V_R$	
Capacitance Range	C_R	220 ~ 47000µF	
Cap. Tolerance	ΔC	±20% (120Hz ▪ 20°C)	
Leakage Current (20°C ▪ V_R applied)	I_{LEAK}	≤ $0.018 \cdot (C_R \cdot V_R)^{0.85} + 4$ (µA) or 5mA (whichever is smaller) ▪ After 5 minutes [I_{LEAK} (µA) ; C_R (µF) ; V_R (V)]	
Dissipation Factor % (20°C ▪ 120Hz)	tanδ	V_R (V DC)	160 ~ 450
		tanδ	15
Low Temperature Characteristics at 120Hz	Z ratio max.	V_R (V DC)	160 ~ 450
		Z-25°C/Z+20°C	4
		Z-40°C/Z+20°C	10

Lifetime Test		
Useful Life 105°C (V_R & I_R applied)	Test	**8000 hours**
	△C/C_R	≤ ±15% of initial measured value
	tanδ	≤ 175% of initial specified value
	I_{Leak}	≤ the initial specified value
	Deviation Rate @ Useful Life: 10 000 FIT = 1%/1000h with 60% confidence level ▪ parts show higher drift as test criteria	
Endurance 105°C (V_R & I_R applied)	Test	**2000 hours**
	△C/C_R	≤ ±10% of initial measured value
	tanδ	≤ 130% of initial specified value
	I_{Leak}	≤ the initial specified value
Shelf Life 105°C (V_R = 0)	Test	**1000 hours**
	△C/C_R	≤ ±10% of initial measured value
	tanδ	≤ 130% of initial specified value
	I_{Leak}	≤ the initial specified value
	Before measurement: Restore capacitor to 20°C, apply V_R for 30 min according JIS-C-5101-4	
Vibration Resistance Test	Max. 10g force, f_{RANGE} 10Hz … 55Hz, amplitude 0.75mm; X/Y/Z-axis each 2h; capacitor rigidly clamped by body to surface ▪ IEC 60068-2-6	

For further information please contact sales@capxon.org

STANDARD RATINGS

□□□ see terminal code at dimensions table

V_R (V)	C_R (µF)	ø D (mm)	L (mm)	Typ. ESR +20°C ▪ 120Hz (mΩ)	Max. ESR +20°C ▪ 120Hz (mΩ)	I_R ▪ Max. Ripple Current +105°C ▪ 120Hz (mA rms)	CapXon Part Number
160	1000	35	60	110	200	1900	RH102M160P600□□□
	1500	35	80	68	130	2500	RH152M160P800□□□
	2200	35	100	48	90	3300	RH222M160PA00□□□
	3300	35	120	32	60	4500	RH332M160PA20□□□
	3300	51	80	32	60	4500	RH332M160R800□□□
	4700	51	100	22	42	5500	RH472M160RA00□□□
	6800	51	140	15	29	7800	RH682M160RA40□□□
	6800	63.5	100	15	29	7500	RH682M160SA00□□□
	10000	63.5	120	10	20	8800	RH103M160SA20□□□
	15000	76.2	120	7	13	10800	RH153M160TA20□□□
	22000	76.2	140	5	9	13800	RH223M160TA40□□□
	22000	89	130	5	9	14500	RH223M160XA30□□□
	33000	89	140	3	6	15500	RH333M160XA40□□□
	47000	89	220	3	5	19200	RH473M160XB20□□□
200	680	35	50	150	290	1400	RH681M200P500□□□
	1000	35	60	110	200	2000	RH102M200P600□□□
	1500	35	80	68	130	2500	RH152M200P800□□□
	2200	35	120	48	90	3600	RH222M200PA20□□□
	2200	51	80	48	90	3600	RH222M200R800□□□
	3300	51	80	32	60	4600	RH332M200R800□□□
	3300	51	100	32	60	4800	RH332M200RA00□□□
	4700	51	140	22	42	6400	RH472M200RA40□□□
	4700	63.5	100	22	42	6200	RH472M200SA00□□□
	6800	63.5	120	15	29	7700	RH682M200SA20□□□
	10000	76.2	120	10	20	10000	RH103M200TA20□□□
	15000	76.2	140	7	13	11500	RH153M200TA40□□□
	15000	76.2	160	7	13	12200	RH153M200TA60□□□
	22000	76.2	160	5	9	15500	RH223M200TA60□□□
	22000	89	140	5	9	16500	RH223M200XA40□□□
250	470	35	60	220	420	1200	RH471M250P600□□□
	680	35	80	150	290	1700	RH681M250P800□□□
	1000	35	100	110	200	2500	RH102M250PA00□□□
	1500	51	80	68	130	2900	RH152M250R800□□□
	2200	51	100	48	90	4000	RH222M250RA00□□□
	3300	51	140	32	60	5300	RH332M250RA40□□□
	3300	63.5	100	32	60	5000	RH332M250SA00□□□
	4700	63.5	120	22	42	6600	RH472M250SA20□□□
	6800	76.2	120	15	29	8300	RH682M250TA20□□□
	10000	76.2	160	10	20	11000	RH103M250TA60□□□
	10000	89	140	10	20	11500	RH103M250XA40□□□
	15000	89	170	7	13	14500	RH153M250XA70□□□
	22000	89	220	5	9	17000	RH223M250XB20□□□

For further information please contact sales@capxon.org

STANDARD RATINGS

□□□ see terminal code at dimensions table

V_R (V)	C_R (µF)	ø D (mm)	L (mm)	Typ. ESR +20°C ▪ 120Hz (mΩ)	Max. ESR +20°C ▪ 120Hz (mΩ)	I_R ▪ Max. Ripple Current +105°C ▪ 120Hz (mA rms)	CapXon Part Number
350	330	35	60	320	600	1600	RH331M350P600□□□
	470	35	80	220	420	2300	RH471M350P800□□□
	680	35	100	150	290	3300	RH681M350PA00□□□
	1000	35	120	110	200	4400	RH102M350PA20□□□
	1000	51	80	110	200	4600	RH102M350R800□□□
	1500	51	80	68	130	5700	RH152M350R800□□□
	1500	51	100	68	130	6800	RH152M350RA00□□□
	2200	51	105	48	90	7700	RH222M350RA05□□□
	2200	51	120	48	90	8300	RH222M350RA20□□□
	2200	51	140	48	90	8800	RH222M350RA40□□□
	2700	63.5	80	39	74	8700	RH272M350S800□□□
	3300	63.5	100	32	60	10000	RH332M350SA00□□□
	3300	63.5	120	32	60	10800	RH332M350SA20□□□
	3900	63.5	120	27	51	11500	RH392M350SA20□□□
	4700	63.5	145	22	42	12600	RH472M350SA45□□□
	4700	76.2	105	22	42	12600	RH472M350TA05□□□
	4700	76.2	120	22	42	13000	RH472M350TA20□□□
	5600	76.2	130	19	36	14800	RH562M350TA30□□□
	6800	76.2	140	15	29	16500	RH682M350TA40□□□
	8200	76.2	160	13	24	20000	RH822M350TA60□□□
	8200	89	145	13	24	21500	RH822M350XA45□□□
	10000	76.2	160	10	20	21500	RH103M350TA60□□□
	10000	76.2	190	10	20	23000	RH103M350TA90□□□
	10000	89	140	10	20	23000	RH103M350XA40□□□
	12000	76.2	220	9	17	27500	RH123M350TB20□□□
	12000	89	170	9	17	28500	RH123M350XA70□□□
	15000	89	190	7	13	30000	RH153M350XA90□□□
	18000	89	220	6	11	34000	RH183M350XB20□□□
400	220	35	50	470	900	1400	RH221M400P500□□□
	330	35	60	320	600	1700	RH331M400P600□□□
	470	35	80	220	420	3300	RH471M400P800□□□
	680	35	120	150	290	3900	RH681M400PA20□□□
	680	51	80	150	290	4100	RH681M400R800□□□
	1000	51	80	110	200	4700	RH102M400R800□□□
	1500	51	105	68	130	6400	RH152M400RA05□□□
	1500	51	120	68	130	7000	RH152M400RA20□□□
	2200	51	130	48	90	9100	RH222M400RA30□□□
	2200	63.5	100	48	90	8300	RH222M400SA00□□□
	2700	63.5	100	39	74	10000	RH272M400SA00□□□
	3300	63.5	130	32	60	11500	RH332M400SA30□□□
	3300	76.2	105	32	60	11700	RH332M400TA05□□□
	3300	76.2	120	32	60	12200	RH332M400TA20□□□
	3900	76.2	120	27	51	13000	RH392M400TA20□□□
	4700	76.2	120	22	42	14500	RH472M400TA20□□□

For further information please contact sales@capxon.org

STANDARD RATINGS

□□□ see terminal code at dimensions table

V_R (V)	C_R (µF)	ø D (mm)	L (mm)	Typ. ESR +20°C ▪ 120Hz (mΩ)	Max. ESR +20°C ▪ 120Hz (mΩ)	I_R ▪ Max. Ripple Current +105°C ▪ 120Hz (mA rms))	CapXon Part Number
400	4700	76.2	130	22	42	15000	RH472M400TA30□□□
	5600	76.2	145	19	36	17000	RH562M400TA45□□□
	6800	76.2	160	15	29	19300	RH682M400TA60□□□
	6800	89	145	15	29	20000	RH682M400XA45□□□
	8200	89	160	13	24	22000	RH822M400XA60□□□
	10000	89	160	10	20	24000	RH103M400XA60□□□
	12000	89	180	9	17	28000	RH123M400XA80□□□
	15000	89	200	7	13	31000	RH153M400XB00□□□
450	220	35	50	470	900	1400	RH221M450P500□□□
	330	35	60	320	600	1700	RH331M450P600□□□
	470	35	80	220	420	3500	RH471M450P800□□□
	680	35	120	150	290	4200	RH681M450PA20□□□
	680	51	80	150	290	5500	RH681M450R800□□□
	1000	51	80	110	200	5800	RH102M450R800□□□
	1000	51	105	110	200	6500	RH102M450RA05□□□
	1500	51	120	68	130	7100	RH152M450RA20□□□
	2200	63.5	100	48	90	8400	RH222M450SA00□□□
	2200	63.5	120	48	90	9200	RH222M450SA20□□□
	2700	63.5	130	39	74	11300	RH272M450SA30□□□
	3300	63.5	145	32	60	13200	RH332M450SA45□□□
	3300	76.2	120	32	60	12700	RH332M450TA20□□□
	3900	76.2	145	27	51	15000	RH392M450TA45□□□
	4700	76.2	120	22	42	15000	RH472M450TA20□□□
	4700	76.2	160	22	42	17000	RH472M450TA60□□□
	5600	76.2	130	19	36	16000	RH562M450TA30□□□
	5600	76.2	160	19	36	17800	RH562M450TA60□□□
	5600	89	145	19	36	20000	RH562M450XA45□□□
	6800	76.2	160	15	29	20000	RH682M450TA60□□□
	6800	76.2	220	15	29	22000	RH682M450TB20□□□
	6800	89	170	15	29	23000	RH682M450XA70□□□
	8200	89	180	13	24	24000	RH822M450XA80□□□
	10000	89	200	10	20	27000	RH103M450XB00□□□
	12000	89	236	9	17	29000	RH123M450XB36□□□

For further information please contact sales@capxon.org

DIMENSIONS ▪ Ring clamp mounting ▪ All dimensions in mm

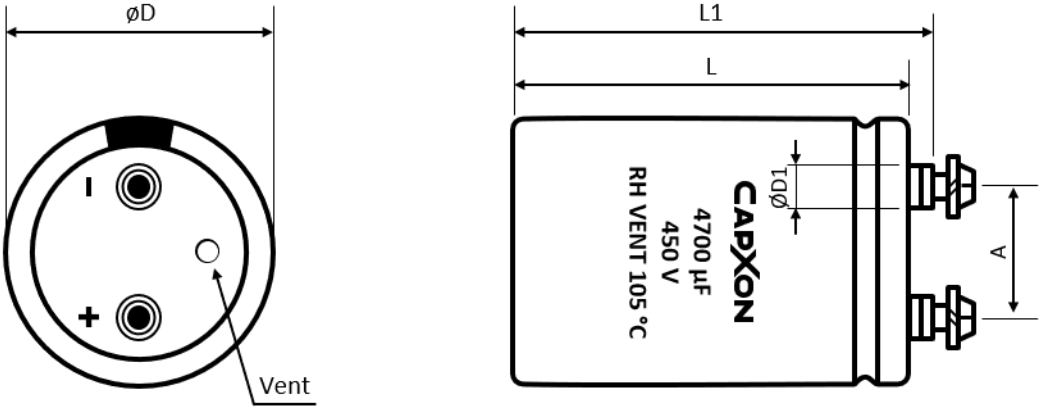

Terminal	Dimensions (mm) with insulating sleeve					Min. Full Thread (mm)	Max. Torque (Nm)	Terminal code
	D ± 2	L ± 3	L1 ± 3	D1 max.	A ± 0.5			
M5	35	50 ~ 120	56.5 ~ 126.5	8.3	12.7	8	2	A50
M5	51	50 ~ 140	56.5 ~ 146.5	10.3	22	8	2	A50
M5	63.5	80 ~ 140	86.5 ~ 146.5	10.3	28.6	8	2	A50
M5	63.5	80 ~ 140	86.5 ~ 146.5	13	28.6	8	2	A53
M5	76.2	100 ~ 240	106.5 ~ 246.5	10.3	31.8	12	2.5	A50
M5	76.2	100 ~ 240	106.5 ~ 246.5	13	31.8	12	2.5	A53
M6	76.2	100 ~ 240	106.5 ~ 246.5	13	31.8	12	2.5	A63
M6	76.2	100 ~ 240	106.5 ~ 246.5	17.5	31.8	12	2.5	A67
M6	89	100 ~ 240	106.5 ~ 246.5	13	31.8	12	2.5	A63
M6	89	100 ~ 240	106.5 ~ 246.5	17.5	31.8	12	2.5	A67

DIMENSIONS ▪ Threaded stud mounting ▪ All dimensions in mm

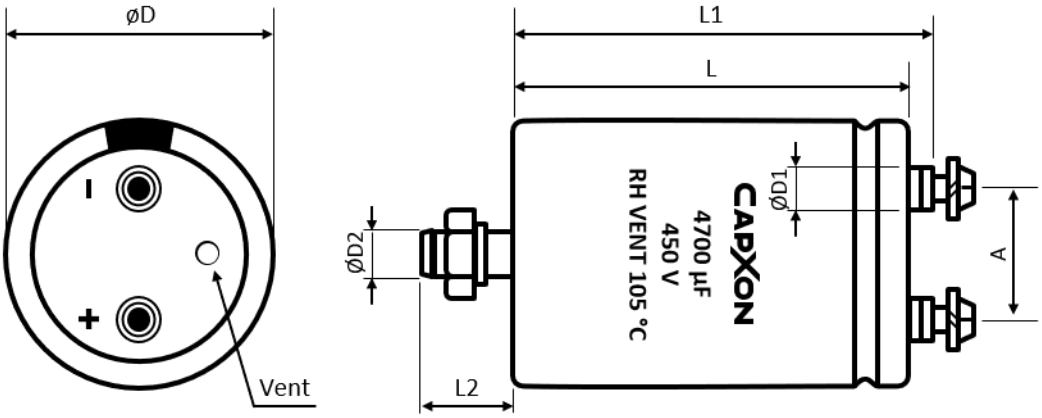

For further information please contact sales@capxon.org

DIMENSIONS ▪ Threaded stud mounting ▪ All dimensions in mm

Terminal	Dimensions (mm) with insulating sleeve							Min. Full Thread (mm)	Max. Torque (Nm)	Terminal code
	D ± 2	L ± 3	L1 ± 3	L2 ± 1	D1 max.	D2	A ± 0.5			
M5	35	50 ~ 120	56.5 ~ 126.5	12	8.3	M8	12.7	8	2	E50
M5	51	50 ~ 140	56.5 ~ 146.5	16	10.3	M12	22	8	2	E50
M5	63.5	80 ~ 140	86.5 ~ 146.5	16	10.3	M12	28.6	8	2	E50
M5	63.5	80 ~ 140	86.5 ~ 146.5	16	13	M12	28.6	8	2	E53
M5	76.2	100 ~ 240	106.5 ~ 246.5	16	10.3	M12	31.8	12	2.5	E50
M5	76.2	100 ~ 240	106.5 ~ 246.5	16	13	M12	31.8	12	2.5	E53
M6	76.2	100 ~ 240	106.5 ~ 246.5	16	13	M12	31.8	12	2.5	E63
M6	76.2	100 ~ 240	106.5 ~ 246.5	16	17.5	M12	31.8	12	2.5	E67
M6	89	100 ~ 240	106.5 ~ 246.5	16	13	M12	31.8	12	2.5	E63
M6	89	100 ~ 240	106.5 ~ 246.5	16	17.5	M12	31.8	12	2.5	E67

ACCESSORIES

- The capacitors are supplied with suitable screws, serrated washers and plain washers. Accessories are not fastened to the capacitor.
- Suitable ring clamps and further assembly material see additional information “Accessories”.

MULTIPLIER K_f for RIPPLE CURRENT vs. FREQUENCY

Frequency (Hz)	50/60	100/120	300	1k	≥ 3k
K_f	0.8	1	1.2	1.3	1.4

PRECAUTIONS, GUIDELINES AND PACKAGING INFORMATON

Unless otherwise agreed in individual specifications, all products are subject to our “General Precautions and Guidelines” as well as our “Packaging Information”. Please refer to the following pages in the table.

	
General Precautions and Guidelines	Packaging Information Liquid Screw
Page 837	Page 681

For further information please contact sales@capxon.org

USEFUL LIFE

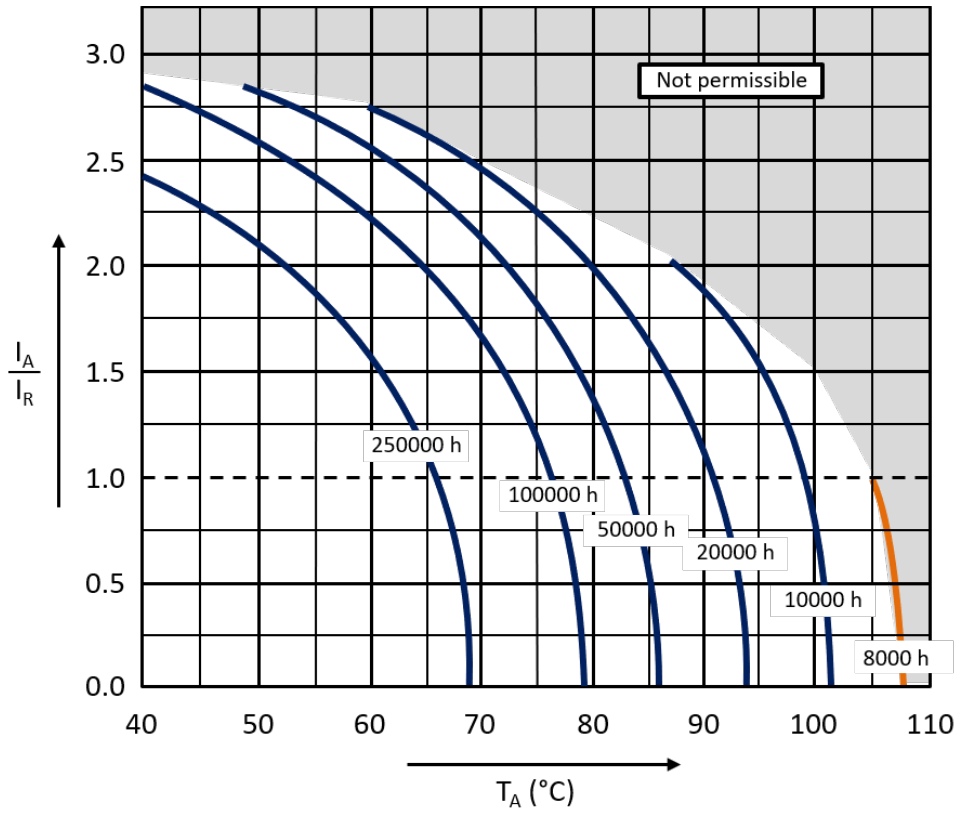

With: I_A: Actual application current
I_R: Maximum permissible rated ripple current (A RMS)
T_A: Ambient temperature of the capacitor

DISCLAIMER

All product related data (e.g. specification, statements and general information) are subject to change without any notice. It is necessary that the customer observes all product related technical / application information and handling instructions.

CapXon products are designed and manufactured according to severe quality and safety standards. Under no circumstance, CapXon warrants that any CapXon product is suitable for the purposes intended for your application, even CapXon knows the application. It is customer's duty and obligation to check and make sure that CapXon products are suitable for the purposes intended and select the correct and proper CapXon product. Customers are requested to perform a sufficient validation and reliability evaluation to assure needed safety level and reliability performance by suitable designs and to apply proper safeguards (e.g. redundancies, protective circuits).

Particular operating conditions (ambient temperature, ripple current, voltage, thermal resistance, etc.) as well as storage, production or assembly may affect the performance and the lifetime of the capacitor. Please consult CapXon for lifetime estimation, failure mode considerations or worst-case scenarios according to the product technology, product tolerances / deviations or change of the characteristics of the capacitor due to shipment, storage, handling, production and usage.

For aerospace or military application, life-saving, life-sustaining, safety critical applications or any application where failure may cause severe personal injury or death, please consult us before design-in the capacitor in your application.

Except for the written expressed warranties, CapXon does not impliedly, by assumption or whatever else, warrant, undertake, promise any other warranty or guaranty for any CapXon product.

For further information, please visit our website www.capxongroup.com or contact CapXon directly.

RL SERIES ▪ ULTRA LONG LIFE 105°C TYPE



KEY FEATURES

HIGH VOLTAGE LONG LIFE

- **ALUMINUM ELECTROLYTIC CAPACITOR** ▪ Screw terminal type
- Useful life: 105°C ▪ 10000 hours
- Wide capacitance range
- All-welded construction ensures highest reliability
- Bottom cooling possible due to the thermal construction

HF Halogen Free RoHS & REACH COMPLIANT

SPECIFICATIONS

Items		Performance Characteristics		
Operating Temperature Range		-40 ~ +105°C	-25 ~ +105°C	
Rated Voltage Range	V_R	160 ~ 450V DC	500V DC	
Surge Voltage	V_S	($V_R \le 315V$): $V_S = 1.15 \cdot V_R$	($V_R > 315V$): $V_S = 1.10 \cdot V_R$	
Capacitance Range	C_R	220 ~ 22000µF	680 ~ 8200µF	
Cap. Tolerance	ΔC	±20% (120Hz ▪ 20°C)		
Leakage Current (20°C ▪ V_R applied)	I_{LEAK}	≤ $0.018 \cdot (C_R \cdot V_R)^{0.85} + 4$ (µA) or 5mA (whichever is smaller) ▪ After 5 minutes [I_{LEAK} (µA) ; C_R (µF) ; V_R (V)]		
Dissipation Factor % (20°C ▪ 120Hz)	tanδ	V_R (V DC)	160 ~ 450	500
		tanδ	15	20
Low Temperature Characteristics at 120Hz	Z ratio max.	V_R (V DC)	160 ~ 450	500
		Z-25°C/Z+20°C	4	4
		Z-40°C/Z+20°C	10	-

Lifetime Test		
Useful Life 105°C (V_R & I_R applied)	Test	**10000 hours**
	△C/C_R	≤ ±15% of initial measured value
	tanδ	≤ 175% of initial specified value
	I_{Leak}	≤ the initial specified value
	Deviation Rate @ Useful Life: 10 000 FIT = 1%/1000h with 60% confidence level ▪ parts show higher drift as test criteria	
Endurance 105°C (V_R & I_R applied)	Test	**5000 hours**
	△C/C_R	≤ ±15% of initial measured value
	tanδ	≤ 175% of initial specified value
	I_{Leak}	≤ the initial specified value
Shelf Life 105°C (V_R = 0)	Test	**1000 hours**
	△C/C_R	≤ ±15% of initial measured value
	tanδ	≤ 175% of initial specified value
	I_{Leak}	≤ the initial specified value
	Before measurement: Restore capacitor to 20°C, apply V_R for 30 min according JIS-C-5101-4	
Vibration Resistance Test	Max. 10g force, f_{RANGE} 10Hz … 55Hz, amplitude 0.75mm; X/Y/Z-axis each 2h; capacitor rigidly clamped by body to surface ▪ IEC 60068-2-6	

For further information please contact sales@capxon.org

STANDARD RATINGS

□□□ see terminal code at dimensions table

V_R (V)	C_R (µF)	ø D (mm)	L (mm)	Typ. ESR +20°C ▪ 120Hz (mΩ)	Max. ESR +20°C ▪ 120Hz (mΩ)	I_R ▪ Max. Ripple Current +105°C ▪ 120Hz (mA rms)	CapXon Part Number
160	680	35	50	150	290	1600	RL681M160P500□□□
	820	35	80	120	240	2200	RL821M160P800□□□
	1000	35	80	100	200	2500	RL102M160P800□□□
	1200	35	80	87	170	2700	RL122M160P800□□□
	1500	35	80	67	130	2900	RL152M160P800□□□
	1800	35	100	56	110	3600	RL182M160PA00□□□
	2200	35	120	46	90	4200	RL222M160PA20□□□
	2700	35	120	38	74	4600	RL272M160PA20□□□
	3300	51	100	31	60	5800	RL332M160RA00□□□
	3900	51	120	26	51	6800	RL392M160RA20□□□
	4700	51	120	22	42	7500	RL472M160RA20□□□
	5600	51	120	18	36	8300	RL562M160RA20□□□
	6800	63.5	120	15	29	10200	RL682M160SA20□□□
	8200	76.2	100	12	24	11500	RL822M160TA00□□□
	10000	76.2	120	10	20	13000	RL103M160TA20□□□
	12000	76.2	140	9	17	14500	RL123M160TA40□□□
	15000	89	140	7	13	17300	RL153M160XA40□□□
200	470	35	50	220	420	1300	RL471M200P500□□□
	560	35	80	180	360	1700	RL561M200P800□□□
	680	35	80	150	290	1900	RL681M200P800□□□
	820	35	80	120	240	2100	RL821M200P800□□□
	1000	35	100	100	200	2600	RL102M200PA00□□□
	1200	35	120	87	170	3100	RL122M200PA20□□□
	1500	35	120	67	130	3500	RL152M200PA20□□□
	1800	51	80	56	110	3800	RL182M200R800□□□
	2200	51	100	46	90	4700	RL222M200RA00□□□
	2700	51	120	38	74	5700	RL272M200RA20□□□
	3300	51	120	31	60	6200	RL332M200RA20□□□
	3900	63.5	100	26	51	7100	RL392M200SA00□□□
	4700	63.5	120	22	42	8300	RL472M200SA20□□□
	5600	76.2	100	18	36	9400	RL562M200TA00□□□
	6800	76.2	120	15	29	11000	RL682M200TA20□□□
	8200	76.2	140	12	24	13000	RL822M200TA40□□□
	10000	89	140	10	20	15800	RL103M200XA40□□□
250	330	35	50	310	600	1100	RL331M250P500□□□
	390	35	80	260	510	1500	RL391M250P800□□□
	470	35	80	220	420	1600	RL471M250P800□□□
	560	35	80	180	360	1800	RL561M250P800□□□
	680	35	100	150	290	2100	RL681M250PA00□□□
	820	35	100	120	240	2300	RL821M250PA00□□□
	1000	35	120	100	200	2800	RL102M250PA20□□□
	1200	51	80	87	170	3200	RL122M250R800□□□
	1500	51	100	67	130	3900	RL152M250RA00□□□
	1800	51	120	56	110	4600	RL182M250RA20□□□

For further information please contact sales@capxon.org

STANDARD RATINGS

□□□ see terminal code at dimensions table

V_R (V)	C_R (µF)	ø D (mm)	L (mm)	Typ. ESR +20°C ▪ 120Hz (mΩ)	Max. ESR +20°C ▪ 120Hz (mΩ)	I_R ▪ Max. Ripple Current +105°C ▪ 120Hz (mA rms)	CapXon Part Number
250	2200	51	120	46	90	5100	RL222M250RA20□□□
	2700	63.5	100	38	74	6000	RL272M250SA00□□□
	3300	63.5	120	31	60	7000	RL332M250SA20□□□
	3900	76.2	100	26	51	7900	RL392M250TA00□□□
	4700	76.2	120	22	42	9200	RL472M250TA20□□□
	5600	76.2	140	18	36	10700	RL562M250TA40□□□
	6800	89	140	15	29	12900	RL682M250XA40□□□
350	330	35	80	310	600	2200	RL331M350P800□□□
	470	35	80	220	420	2900	RL471M350P800□□□
	680	51	60	150	290	3700	RL681M350R600□□□
	820	51	60	120	240	3800	RL821M350R600□□□
	1000	51	75	100	200	6400	RL102M350R750□□□
	1000	51	80	100	200	6600	RL102M350R800□□□
	1200	51	75	87	170	6600	RL122M350R750□□□
	1200	51	80	87	170	6700	RL122M350R800□□□
	1500	51	80	67	130	8000	RL152M350R800□□□
	1500	51	96	67	130	8700	RL152M350R960□□□
	1800	51	96	56	110	8800	RL182M350R960□□□
	1800	51	120	56	110	9700	RL182M350RA20□□□
	2200	51	98	46	90	10100	RL222M350R980□□□
	2200	51	120	46	90	11000	RL222M350RA20□□□
	2700	51	98	38	74	10500	RL272M350R980□□□
	2700	51	125	38	74	11700	RL272M350RA25□□□
	2700	63.5	85	38	74	11900	RL272M350S850□□□
	2700	63.5	100	38	74	12800	RL272M350SA00□□□
	3300	51	118	31	60	11500	RL332M350RA18□□□
	3300	51	145	31	60	12600	RL332M350RA45□□□
	3300	63.5	100	31	60	13800	RL332M350SA00□□□
	3900	63.5	100	26	51	15100	RL392M350SA00□□□
	3900	63.5	130	26	51	16900	RL392M350SA30□□□
	3900	76.2	100	26	51	16700	RL392M350TA00□□□
	4700	63.5	115	22	42	17900	RL472M350SA15□□□
	4700	76.2	110	22	42	19400	RL472M350TA10□□□
	5600	63.5	135	18	36	20500	RL562M350SA35□□□
	5600	63.5	170	18	36	22800	RL562M350SA70□□□
	5600	76.2	125	18	36	22200	RL562M350TA25□□□
	5600	89	105	18	36	24100	RL562M350XA05□□□
	6800	63.5	189	15	29	26400	RL682M350SA89□□□
	6800	76.2	125	15	29	24300	RL682M350TA25□□□
	6800	76.2	150	15	29	26300	RL682M350TA50□□□
	6800	89	119	15	29	27300	RL682M350XA19□□□
	8200	63.5	244	12	24	32500	RL822M350SB44□□□
	8200	76.2	136	12	24	27500	RL822M350TA36□□□
	8200	76.2	170	12	24	30400	RL822M350TA70□□□

For further information please contact sales@capxon.org

STANDARD RATINGS

□□□ see terminal code at dimensions table

V_R (V)	C_R (µF)	ø D (mm)	L (mm)	Typ. ESR +20°C ▪ 120Hz (mΩ)	Max. ESR +20°C ▪ 120Hz (mΩ)	I_R ▪ Max. Ripple Current +105°C ▪ 120Hz (mA rms)	CapXon Part Number
350	8200	89	120	12	24	28500	RL822M350XA20□□□
	8200	89	150	12	24	31400	RL822M350XA50□□□
	10000	76.2	190	10	20	31600	RL103M350TA90□□□
	10000	76.2	220	10	20	33800	RL103M350TB20□□□
	10000	89	136	10	20	29700	RL103M350XA36□□□
	10000	89	170	10	20	32700	RL103M350XA70□□□
	12000	76.2	240	9	17	35300	RL123M350TB40□□□
	12000	89	136	9	17	29800	RL123M350XA36□□□
	12000	89	190	9	17	34300	RL123M350XA90□□□
	12000	100	190	9	17	36800	RL123M350DA90□□□
	15000	89	176	7	13	39000	RL153M350XA76□□□
	15000	89	220	7	13	43000	RL153M350XB20□□□
	15000	100	250	7	13	48700	RL153M350DB50□□□
	18000	89	186	6	11	40000	RL183M350XA86□□□
	18000	89	240	6	11	44900	RL183M350XB40□□□
	22000	89	230	5	9	45200	RL223M350XB30□□□
	22000	89	270	5	9	48700	RL223M350XB70□□□
	22000	100	250	5	9	50000	RL223M350DB50□□□
400	220	35	80	460	900	1700	RL221M400P800□□□
	330	35	80	310	600	2400	RL331M400P800□□□
	470	35	100	220	420	3200	RL471M400PA00□□□
	680	51	60	150	290	3800	RL681M400R600□□□
	680	51	80	150	290	4300	RL681M400R800□□□
	1000	51	75	100	200	6500	RL102M400R750□□□
	1000	51	80	100	200	6700	RL102M400R800□□□
	1200	51	80	87	170	7000	RL122M400R800□□□
	1200	51	96	87	170	7700	RL122M400R960□□□
	1500	51	96	67	130	8800	RL152M400R960□□□
	1500	51	115	67	130	9500	RL152M400RA15□□□
	1800	51	105	56	110	9600	RL182M400RA05□□□
	1800	51	140	56	110	10800	RL182M400RA40□□□
	1800	63.5	85	56	110	9900	RL182M400S850□□□
	2200	51	105	46	90	10500	RL222M400RA05□□□
	2200	51	125	46	90	11300	RL222M400RA25□□□
	2200	63.5	85	46	90	10800	RL222M400S850□□□
	2200	63.5	100	46	90	11600	RL222M400SA00□□□
	2700	51	145	38	74	13600	RL272M400RA45□□□
	2700	63.5	90	38	74	12400	RL272M400S900□□□
	2700	63.5	115	38	74	13700	RL272M400SA15□□□
	3300	63.5	95	31	60	14500	RL332M400S950□□□
	3300	63.5	130	31	60	16700	RL332M400SA30□□□
	3300	76.2	75	31	60	14700	RL332M400T750□□□
	3300	76.2	100	31	60	16500	RL332M400TA00□□□
	3900	63.5	100	26	51	15800	RL392M400SA00□□□

For further information please contact sales@capxon.org

STANDARD RATINGS

□□□ see terminal code at dimensions table

V_R (V)	C_R (µF)	ø D (mm)	L (mm)	Typ. ESR +20°C ▪ 120Hz (mΩ)	Max. ESR +20°C ▪ 120Hz (mΩ)	I_R ▪ Max. Ripple Current +105°C ▪ 120Hz (mA rms)	CapXon Part Number
400	3900	63.5	150	26	51	18900	RL392M400SA50□□□
	3900	76.2	85	26	51	15300	RL392M400T850□□□
	3900	76.2	110	26	51	18300	RL392M400TA10□□□
	3900	76.2	130	26	51	19700	RL392M400TA30□□□
	4700	63.5	120	22	42	18600	RL472M400SA20□□□
	4700	63.5	170	22	42	21700	RL472M400SA70□□□
	4700	76.2	95	22	42	18600	RL472M400T950□□□
	4700	76.2	130	22	42	21200	RL472M400TA30□□□
	5600	63.5	135	18	36	22100	RL562M400SA35□□□
	5600	63.5	190	18	36	25800	RL562M400SA90□□□
	5600	76.2	105	18	36	21900	RL562M400TA05□□□
	5600	76.2	150	18	36	25600	RL562M400TA50□□□
	5600	89	105	18	36	24300	RL562M400XA05□□□
	6800	63.5	250	15	29	31200	RL682M400SB50□□□
	6800	76.2	125	15	29	25200	RL682M400TA25□□□
	6800	76.2	170	15	29	28900	RL682M400TA70□□□
	6800	89	105	15	29	25900	RL682M400XA05□□□
	6800	89	125	15	29	27900	RL682M400XA25□□□
	6800	89	140	15	29	29300	RL682M400XA40□□□
	6800	89	150	15	29	31000	RL682M400XA50□□□
	6800	89	155	15	29	31400	RL682M400XA55□□□
	8200	76.2	170	12	24	30600	RL822M400TA70□□□
	8200	76.2	210	12	24	33700	RL822M400TB10□□□
	8200	89	115	12	24	28200	RL822M400XA15□□□
	8200	89	125	12	24	29200	RL822M400XA25□□□
	8200	89	160	12	24	32500	RL822M400XA60□□□
	8200	89	170	12	24	33400	RL822M400XA70□□□
	10000	76.2	220	10	20	36400	RL103M400TB20□□□
	10000	89	135	10	20	31900	RL103M400XA35□□□
	10000	89	190	10	20	37100	RL103M400XA90□□□
	10000	100	190	10	20	39600	RL103M400DA90□□□
	12000	89	165	9	17	36800	RL123M400XA65□□□
	12000	89	190	9	17	39100	RL123M400XA90□□□
	12000	89	220	9	17	41800	RL123M400XB20□□□
	12000	100	220	9	17	44600	RL123M400DB20□□□
	15000	89	195	7	13	39600	RL153M400XA95□□□
	15000	89	240	7	13	43500	RL153M400XB40□□□
	15000	100	220	7	13	44600	RL153M400DB20□□□
	18000	89	235	6	11	44000	RL183M400XB35□□□
	18000	89	270	6	11	46900	RL183M400XB70□□□
450	220	35	80	460	900	1900	RL221M450P800□□□
	330	35	100	310	600	2500	RL331M450PA00□□□
	470	51	60	220	420	3000	RL471M450R600□□□
	560	51	60	180	360	3300	RL561M450R600□□□

STANDARD RATINGS

□□□ see terminal code at dimensions table

V_R (V)	C_R (µF)	ø D (mm)	L (mm)	Typ. ESR +20°C ▪ 120Hz (mΩ)	Max. ESR +20°C ▪ 120Hz (mΩ)	I_R ▪ Max. Ripple Current +105°C ▪ 120Hz (mA rms)	CapXon Part Number
450	680	51	85	150	290	4500	RL681M450R850□□□
	1000	51	85	100	200	6900	RL102M450R850□□□
	1000	51	105	100	200	7600	RL102M450RA05□□□
	1200	51	85	87	170	7400	RL122M450R850□□□
	1200	51	115	87	170	8500	RL122M450RA15□□□
	1500	51	100	67	130	9100	RL152M450RA00□□□
	1500	51	115	67	130	9600	RL152M450RA15□□□
	1800	51	100	56	110	9500	RL182M450RA00□□□
	1800	63.5	85	56	110	10000	RL182M450S850□□□
	2200	51	120	46	90	11500	RL222M450RA20□□□
	2200	63.5	100	46	90	12000	RL222M450SA00□□□
	2700	51	143	38	74	13800	RL272M450RA43□□□
	2700	63.5	100	38	74	13200	RL272M450SA00□□□
	2700	63.5	130	38	74	14800	RL272M450SA30□□□
	2700	76.2	85	38	74	13700	RL272M450T850□□□
	2700	76.2	115	38	74	15600	RL272M450TA15□□□
	3300	63.5	115	31	60	14700	RL332M450SA15□□□
	3300	63.5	150	31	60	16600	RL332M450SA50□□□
	3300	76.2	95	31	60	16200	RL332M450T950□□□
	3300	76.2	130	31	60	18500	RL332M450TA30□□□
	3900	63.5	135	26	51	18000	RL392M450SA35□□□
	3900	63.5	170	26	51	20000	RL392M450SA70□□□
	3900	76.2	105	26	51	17900	RL392M450TA05□□□
	3900	76.2	130	26	51	19800	RL392M450TA30□□□
	3900	89	105	26	51	19600	RL392M450XA05□□□
	4700	63.5	165	22	42	21600	RL472M450SA65□□□
	4700	76.2	115	22	42	20400	RL472M450TA15□□□
	4700	76.2	130	22	42	21500	RL472M450TA30□□□
	4700	76.2	150	22	42	22900	RL472M450TA50□□□
	4700	89	105	22	42	21500	RL472M450XA05□□□
	5600	63.5	244	18	36	29400	RL562M450SB44□□□
	5600	76.2	135	18	36	22500	RL562M450TA35□□□
	5600	76.2	150	18	36	25900	RL562M450TA50□□□
	5600	76.2	190	18	36	28800	RL562M450TA90□□□
	5600	89	105	18	36	24800	RL562M450XA05□□□
	5600	89	125	18	36	26100	RL562M450XA25□□□
	5600	89	150	18	36	28900	RL562M450XA50□□□
	6800	76.2	170	15	29	29000	RL682M450TA70□□□
	6800	76.2	190	15	29	30500	RL682M450TA90□□□
	6800	76.2	220	15	29	32600	RL682M450TB20□□□
	6800	89	115	15	29	26700	RL682M450XA15□□□
	6800	89	125	15	29	27700	RL682M450XA25□□□
	6800	89	170	15	29	31600	RL682M450XA70□□□
	8200	76.2	195	12	24	33600	RL822M450TA95□□□

STANDARD RATINGS

□□□ see terminal code at dimensions table

V_R (V)	C_R (µF)	ø D (mm)	L (mm)	Typ. ESR +20°C ▪ 120Hz (mΩ)	Max. ESR +20°C ▪ 120Hz (mΩ)	I_R ▪ Max. Ripple Current +105°C ▪ 120Hz (mA rms)	CapXon Part Number
450	8200	76.2	240	12	24	37000	RL822M450TB40□□□
	8200	89	145	12	24	32100	RL822M450XA45□□□
	8200	89	190	12	24	36200	RL822M450XA90□□□
	10000	89	165	10	20	34900	RL103M450XA65□□□
	10000	89	190	10	20	37200	RL103M450XA90□□□
	10000	89	220	10	20	39700	RL103M450XB20□□□
	10000	100	220	10	20	42300	RL103M450DB20□□□
	12000	89	195	9	17	39400	RL123M450XA95□□□
	12000	89	230	9	17	42500	RL123M450XB30□□□
	12000	100	250	9	17	47000	RL123M450DB50□□□
	15000	89	235	7	13	44400	RL153M450XB35□□□
	15000	89	250	7	13	45700	RL153M450XB50□□□
500	680	51	75	200	390	4100	RL681M500R750□□□
	1000	51	90	140	270	5100	RL102M500R900□□□
	1200	51	115	110	220	5900	RL122M500RA15□□□
	1200	63.5	80	110	220	5700	RL122M500S800□□□
	1500	51	135	92	180	7100	RL152M500RA35□□□
	1500	63.5	90	92	180	6700	RL152M500S900□□□
	1800	63.5	100	77	150	7800	RL182M500SA00□□□
	1800	76.2	70	77	150	7500	RL182M500T700□□□
	2200	63.5	120	62	120	8600	RL222M500SA20□□□
	2200	76.2	95	62	120	8600	RL222M500T950□□□
	2700	63.5	135	50	98	9800	RL272M500SA35□□□
	2700	76.2	105	50	98	9700	RL272M500TA05□□□
	3300	63.5	165	41	80	11000	RL332M500SA65□□□
	3300	76.2	130	41	80	11000	RL332M500TA30□□□
	3900	76.2	145	35	68	13100	RL392M500TA45□□□
	3900	89	105	35	68	12500	RL392M500XA05□□□
	4700	76.2	165	29	56	14500	RL472M500TA65□□□
	4700	89	125	29	56	14000	RL472M500XA25□□□
	5600	89	145	24	47	15900	RL562M500XA45□□□
	6800	89	165	20	39	18600	RL682M500XA65□□□
	8200	89	205	17	32	20300	RL822M500XB05□□□

For further information please contact sales@capxon.org

DIMENSIONS ▪ Ring clamp mounting ▪ All dimensions in mm

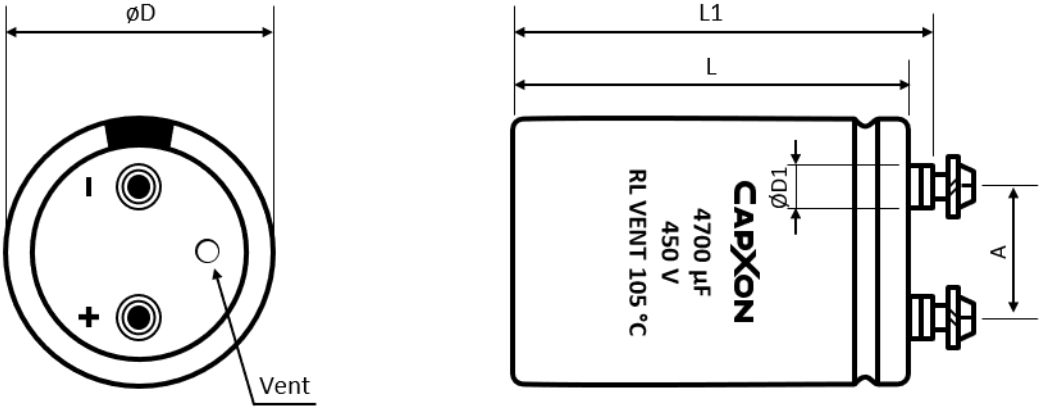

Terminal	Dimensions (mm) with insulating sleeve					Min. Full Thread (mm)	Max. Torque (Nm)	Terminal code
	D ± 2	L ± 3	L1 ± 3	D1 max.	A ± 0.5			
M5	35	50 ~ 120	56.5 ~ 126.5	8.3	12.7	8	2	A50
M5	51	50 ~ 140	56.5 ~ 146.5	10.3	22	8	2	A50
M5	63.5	80 ~ 140	86.5 ~ 146.5	10.3	28.6	8	2	A50
M5	63.5	80 ~ 140	86.5 ~ 146.5	13	28.6	8	2	A53
M5	76.2	100 ~ 240	106.5 ~ 246.5	10.3	31.8	12	2.5	A50
M5	76.2	100 ~ 240	106.5 ~ 246.5	13	31.8	12	2.5	A53
M6	76.2	100 ~ 240	106.5 ~ 246.5	13	31.8	12	2.5	A63
M6	76.2	100 ~ 240	106.5 ~ 246.5	17.5	31.8	12	2.5	A67
M6	89	100 ~ 240	106.5 ~ 246.5	13	31.8	12	2.5	A63
M6	89	100 ~ 240	106.5 ~ 246.5	17.5	31.8	12	2.5	A67
M8	100	100 ~ 240	110 ~ 250	17.5	41.5	16	5	A87

DIMENSIONS ▪ Threaded stud mounting ▪ All dimensions in mm

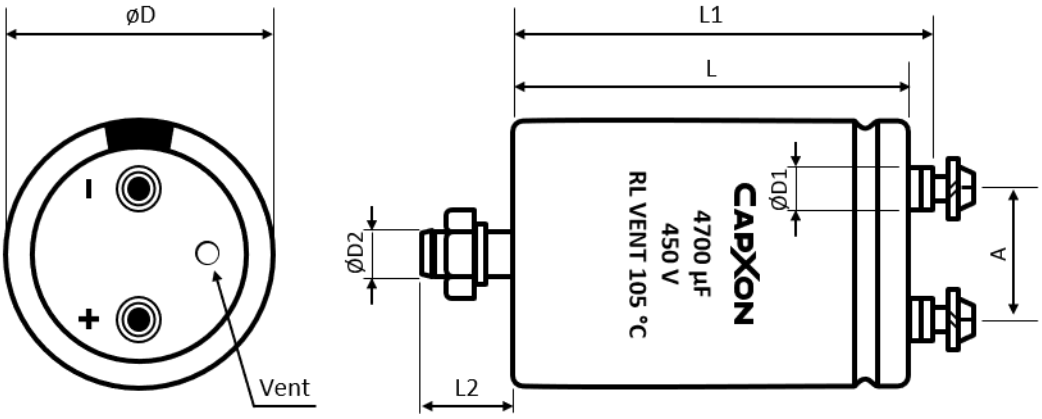

For further information please contact sales@capxon.org

DIMENSIONS ▪ Threaded stud mounting ▪ All dimensions in mm

Terminal	Dimensions (mm) with insulating sleeve							Min. Full Thread (mm)	Max. Torque (Nm)	Terminal code
	D ± 2	L ± 3	L1 ± 3	L2 ± 1	D1 max.	D2	A ± 0.5			
M5	35	50 ~ 120	56.5 ~ 126.5	12	8.3	M8	12.7	8	2	E50
M5	51	50 ~ 140	56.5 ~ 146.5	16	10.3	M12	22	8	2	E50
M5	63.5	80 ~ 140	86.5 ~ 146.5	16	10.3	M12	28.6	8	2	E50
M5	63.5	80 ~ 140	86.5 ~ 146.5	16	13	M12	28.6	8	2	E53
M5	76.2	100 ~ 240	106.5 ~ 246.5	16	10.3	M12	31.8	12	2.5	E50
M5	76.2	100 ~ 240	106.5 ~ 246.5	16	13	M12	31.8	12	2.5	E53
M6	76.2	100 ~ 240	106.5 ~ 246.5	16	13	M12	31.8	12	2.5	E63
M6	76.2	100 ~ 240	106.5 ~ 246.5	16	17.5	M12	31.8	12	2.5	E67
M6	89	100 ~ 240	106.5 ~ 246.5	16	13	M12	31.8	12	2.5	E63
M6	89	100 ~ 240	106.5 ~ 246.5	16	17.5	M12	31.8	12	2.5	E67
M8	100	100 ~ 240	110 ~ 250	16	17.5	M12	41.5	16	5	E87

ACCESSORIES

- The capacitors are supplied with suitable screws, serrated washers and plain washers. Accessories are not fastened to the capacitor.
- Suitable ring clamps and further assembly material see additional information “Accessories”.

MULTIPLIER K_f for RIPPLE CURRENT vs. FREQUENCY

Frequency (Hz)	50/60	100/120	300	1k	≥ 3k
K_f	0.8	1	1.2	1.3	1.4

PRECAUTIONS, GUIDELINES AND PACKAGING INFORMATON

Unless otherwise agreed in individual specifications, all products are subject to our “General Precautions and Guidelines” as well as our “Packaging Information”. Please refer to the following pages in the table.

General Precautions and Guidelines	Packaging Information Liquid Screw
Page 837	Page 681

For further information please contact sales@capxon.org

USEFUL LIFE

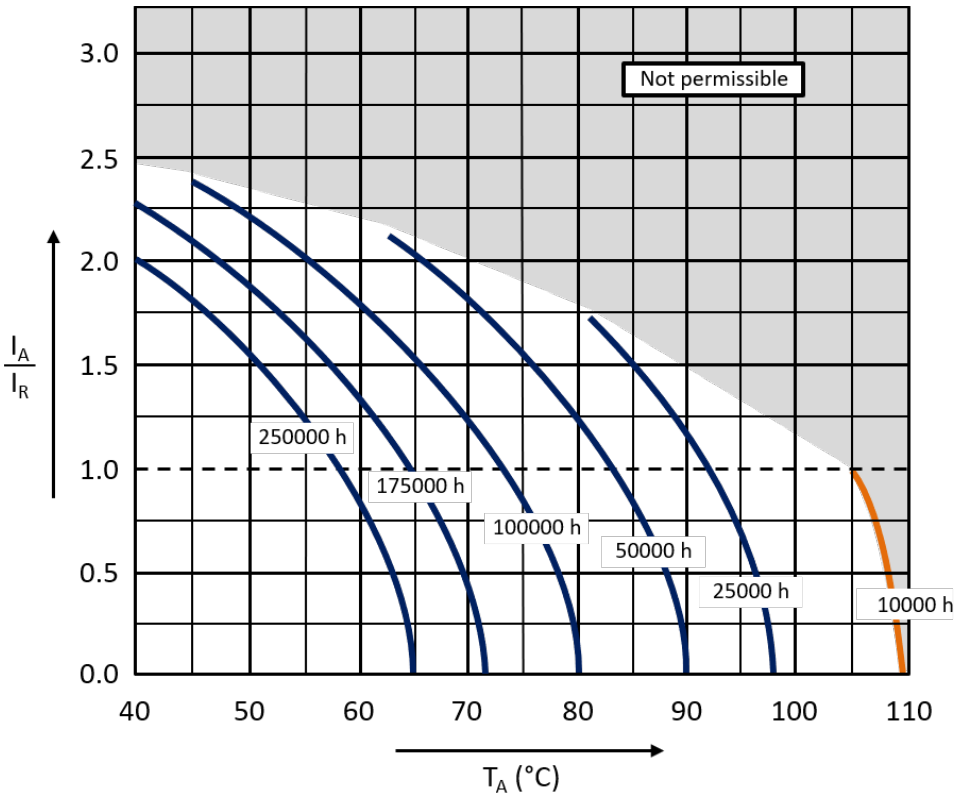

With: I_A: Actual application current
I_R: Maximum permissible rated ripple current (A RMS)
T_A: Ambient temperature of the capacitor

DISCLAIMER

All product related data (e.g. specification, statements and general information) are subject to change without any notice. It is necessary that the customer observes all product related technical / application information and handling instructions.

CapXon products are designed and manufactured according to severe quality and safety standards. Under no circumstance, CapXon warrants that any CapXon product is suitable for the purposes intended for your application, even CapXon knows the application. It is customer's duty and obligation to check and make sure that CapXon products are suitable for the purposes intended and select the correct and proper CapXon product. Customers are requested to perform a sufficient validation and reliability evaluation to assure needed safety level and reliability performance by suitable designs and to apply proper safeguards (e.g. redundancies, protective circuits).

Particular operating conditions (ambient temperature, ripple current, voltage, thermal resistance, etc.) as well as storage, production or assembly may affect the performance and the lifetime of the capacitor. Please consult CapXon for lifetime estimation, failure mode considerations or worst-case scenarios according to the product technology, product tolerances / deviations or change of the characteristics of the capacitor due to shipment, storage, handling, production and usage.

For aerospace or military application, life-saving, life-sustaining, safety critical applications or any application where failure may cause severe personal injury or death, please consult us before design-in the capacitor in your application.

Except for the written expressed warranties, CapXon does not impliedly, by assumption or whatever else, warrant, undertake, promise any other warranty or guaranty for any CapXon product.

For further information, please visit our website www.capxongroup.com or contact CapXon directly.

RP series ▪ 3300µF ▪ 450V ▪ ±20% ▪ Ø 63.5mm ▪ L 130mm ▪ M5 terminal 10.3mm ▪ With stud

1	2	3	4	5	6	7	8	9	10	11	12	13	14	15	16	17	18	19	20
R	P	3	3	2	M	4	5	0	S	A	3	0	E	5	0	-	-	-	-
Series		Capacitance			Capacitance tolerance	Voltage			Case Ø (mm)	Height (mm)			Mounting code	Terminal code		Special requirement			

Code	µF
101	100
561	560
102	1000
472	4700
103	10000
683	68000
104	100000
394	390000
105	1000000

Code	%
H	±5
K	±10
S	±15
M	±20
N	±30
D	±40
I	+5 to +20
B	0 to -20
G	0 to +10
Z	0 to +20
Y	0 to +30
X	0 to +40
A	0 to +50
J	-5 to +20
C	-5 to +30
E	-8 to +5
V	-10 to +20
Q	-10 to +30
T	-10 to +50
W	-20 to +10
P	-15 to +20
L	-25 to +20
U	-30 to 0
F	-35 to 0
O	-50 to 0

Code	Volt
010	10
016	16
025	25
035	35
040	40
050	50
063	63
080	80
100	100
160	160
200	200
250	250
315	315
350	350
400	400
420	420
450	450
500	500
550	550
600	600
630	630
650	650

Code	ØD
P	35
R	51
S	63.5
T	76.2
X	89
D	100

Code	Type
A	Without stud
E	With stud

See available terminals

Code	H	Code	H
500	50	A51	151
550	55	A55	155
600	60	A57	157
650	65	A60	160
700	70	A65	165
750	75	A68	168
800	80	A70	170
830	83	A71	171
850	85	A75	175
900	90	A76	176
920	92	A80	180
950	95	A89	189
960	96	A90	190
970	97	A95	195
980	98	A96	196
A00	100	A97	197
A05	105	B00	200
A15	115	B05	205
A18	118	B10	210
A19	119	B15	215
A20	120	B19	219
A25	125	B20	220
A30	130	B30	230
A34	134	B35	235
A35	135	B36	236
A36	135	B37	237
A40	140	B40	240
A41	141	B44	244
A43	143	B50	250
A45	145	B70	270
A50	150		

Please consult CapXon for further assistance

MARKING ▪ SCREW TERMINAL ALUMINUM ELECTROLYTIC CAPACITORS

Aluminum Electrolytic Capacitor ▪ Screw terminal type

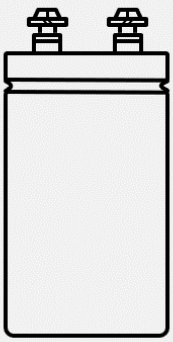

CapXon:	Manufacturer trademark
3300µF:	Nominal capacitance
450V:	Rated voltage
▬	(-) polarity (Cathode indicate)
RP:	Series
VENT:	Safety vent
85°C:	Maximum operating temperature
180927:	Production datecode year/month/day (ex. 2018/September/27th)

Side view

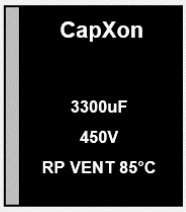

Top view

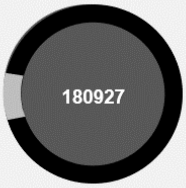

For further information please contact sales@capxon.org

AVAILABLE TERMINALS ▪ SCREW TERMINAL TYPE ▪ WITHOUT STUD

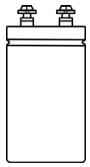

Screw terminal type example:
RP series ▪ 3300µF ▪ 450V ▪ ±20% ▪ Ø 63.5mm ▪ L 130mm ▪ M5 terminal 10.3mm ▪ Without stud

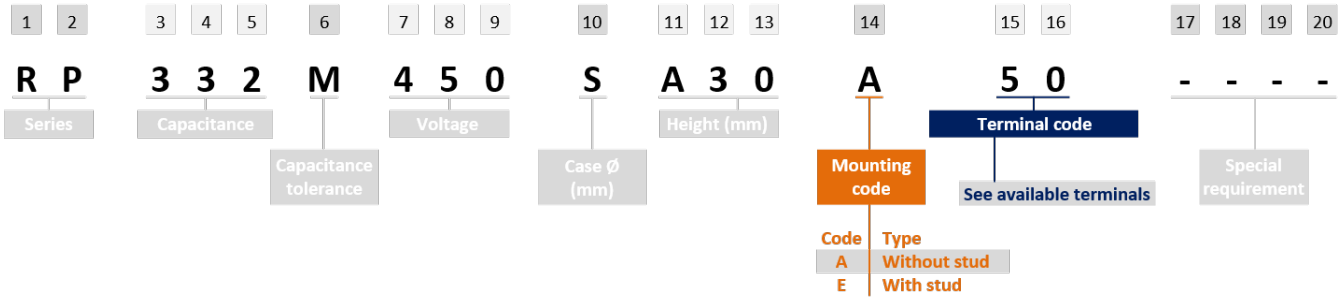

Screw type ▪ Ring clip mounting

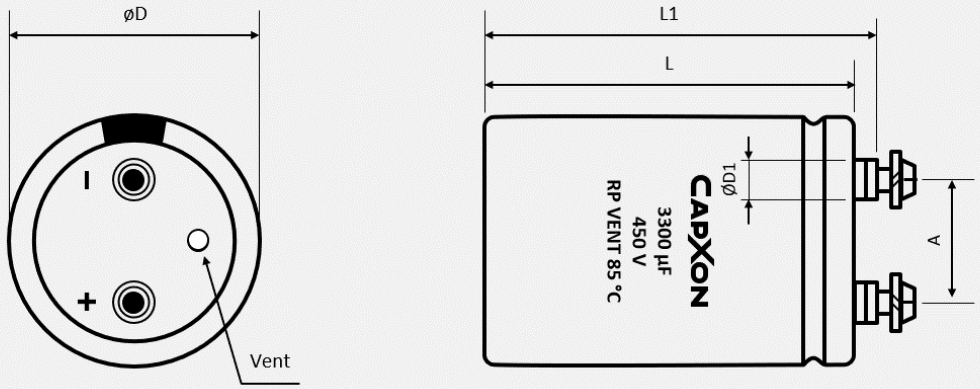

Terminal	Dimensions (mm) with insulating sleeve					Min. Full Thread (mm)	Max. Torque (Nm)	Mounting/ Terminal code
	D ± 2	L ± 3	L1 ± 3	D1 max.	A ± 0.5			
M5	35	50 ~ 120	56.5 ~ 126.5	8.3	12.7	8	2	A 50
M5	51	50 ~ 140	56.5 ~ 146.5	10.3	22	8	2	A 50
M5	63.5	80 ~ 140	86.5 ~ 146.5	10.3	28.6	8	2	A 50
M5	63.5	80 ~ 140	86.5 ~ 146.5	13	28.6	8	2	A 53
M5	76.2	100 ~ 240	106.5 ~ 246.5	10.3	31.8	12	2.5	A 50
M5	76.2	100 ~ 240	106.5 ~ 246.5	13	31.8	12	2.5	A 53
M6	76.2	100 ~ 240	106.5 ~ 246.5	13	31.8	12	2.5	A 63
M6	76.2	100 ~ 240	106.5 ~ 246.5	17.5	31.8	12	2.5	A 67
M6	89	100 ~ 240	106.5 ~ 246.5	13	31.8	12	2.5	A 63
M6	89	100 ~ 240	106.5 ~ 246.5	17.5	31.8	12	2.5	A 67
M8	100	100 ~ 240	110 ~ 250	17.5	41.5	16	5	A 87

For further information please contact sales@capxon.org

AVAILABLE TERMINALS ▪ SCREW TERMINAL TYPE ▪ WITH STUD

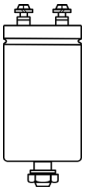

Screw terminal type example:
RP series ▪ 3300µF ▪ 450V ▪ ±20% ▪ Ø 63.5mm ▪ L 130mm ▪ M5 terminal 10.3mm ▪ With stud

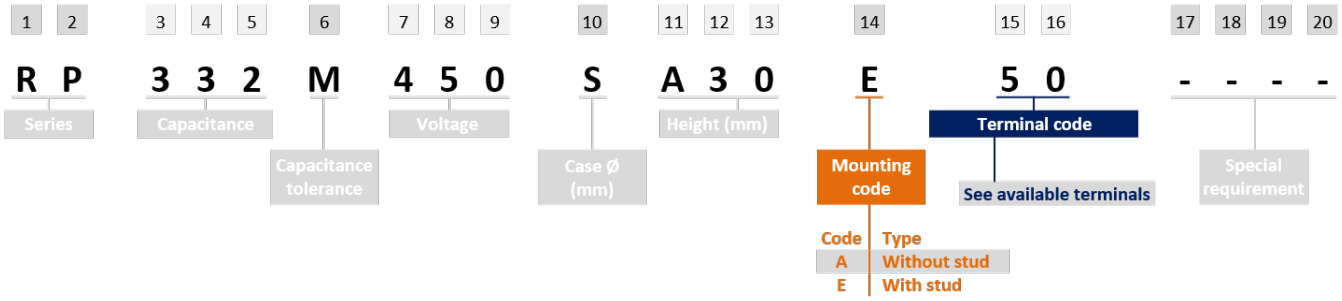

Screw type ▪ Threaded stud mounting

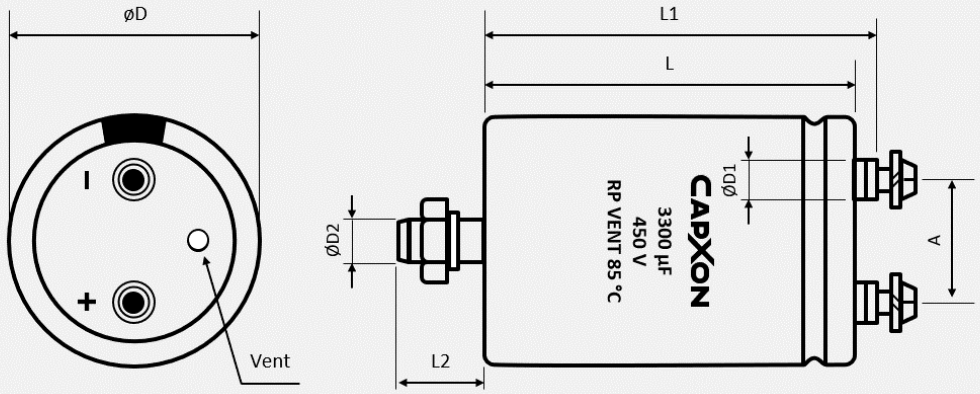

Terminal	Dimensions (mm) with insulating sleeve							Min. Full Thread (mm)	Max. Torque (Nm)	Mounting/ Terminal code
	D ± 2	L ± 3	L1 ± 3	L2 ± 1	D1 max.	D2	A ± 0.5			
M5	35	50 ~ 120	56.5 ~ 126.5	12	8.3	M8	12.7	8	2	E 50
M5	51	50 ~ 140	56.5 ~ 146.5	16	10.3	M12	22	8	2	E 50
M5	63.5	80 ~ 140	86.5 ~ 146.5	16	10.3	M12	28.6	8	2	E 50
M5	63.5	80 ~ 140	86.5 ~ 146.5	16	13	M12	28.6	8	2	E 53
M5	76.2	100 ~ 240	106.5 ~ 246.5	16	10.3	M12	31.8	12	2.5	E 50
M5	76.2	100 ~ 240	106.5 ~ 246.5	16	13	M12	31.8	12	2.5	E 53
M6	76.2	100 ~ 240	106.5 ~ 246.5	16	13	M12	31.8	12	2.5	E 63
M6	76.2	100 ~ 240	106.5 ~ 246.5	16	17.5	M12	31.8	12	2.5	E 67
M6	89	100 ~ 240	106.5 ~ 246.5	16	13	M12	31.8	12	2.5	E 63
M6	89	100 ~ 240	106.5 ~ 246.5	16	17.5	M12	31.8	12	2.5	E 67
M8	100	100 ~ 240	110 ~ 250	16	17.5	M12	41.5	16	5	E 87

For further information please contact sales@capxon.org

PACKAGING ▪ SCREW TERMINAL TYPE ▪ WITHOUT STUD

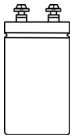

Ø D (mm)	Length L (mm)	Package layers	Box quantity (pcs)	Box size L x W x H (mm)	Country of origin	Tariff number
35	≤ 59	2	120	510 x 340 x 180	China	85322200
	60 to 69	2	120	510 x 340 x 200	China	85322200
	70 to 99	1	60	510 x 340 x 120	China	85322200
	100 to 125	1	60	510 x 340 x 145	China	85322200
51	≤ 59	2	70	510 x 340 x 180	China	85322200
	60 to 69	2	70	510 x 340 x 200	China	85322200
	70 to 99	1	35	510 x 340 x 120	China	85322200
	100 to 125	1	35	510 x 340 x 145	China	85322200
	130 to 140	1	35	510 x 340 x 165	China	85322200
	145 to 160	1	35	510 x 340 x 180	China	85322200
63.5	≤ 100	1	24	510 x 340 x 120	China	85322200
	> 100 to 125	1	24	510 x 340 x 145	China	85322200
	130 to 140	1	24	510 x 340 x 165	China	85322200
	145 to 160	1	24	510 x 340 x 180	China	85322200
	165 to 180	1	24	510 x 340 x 200	China	85322200
	185 to 200	1	24	510 x 340 x 220	China	85322200
76.2	≤ 100	1	15	510 x 340 x 120	China	85322200
	> 100 to 125	1	15	510 x 340 x 145	China	85322200
	130 to 140	1	15	510 x 340 x 165	China	85322200
	145 to 160	1	15	510 x 340 x 180	China	85322200
	165 to 180	1	15	510 x 340 x 200	China	85322200
	185 to 200	1	15	510 x 340 x 220	China	85322200
	205 to 220	1	15	510 x 340 x 240	China	85322200
89	≤ 100	1	12	510 x 340 x 120	China	85322200
	> 100 to 125	1	12	510 x 340 x 145	China	85322200
	130 to 140	1	12	510 x 340 x 165	China	85322200
	145 to 160	1	12	510 x 340 x 180	China	85322200
	165 to 180	1	12	510 x 340 x 200	China	85322200
	185 to 200	1	12	510 x 340 x 220	China	85322200
	205 to 220	1	12	510 x 340 x 240	China	85322200
100	≤ 100	1	6	510 x 340 x 120	China	85322200
	> 100 to 125	1	6	510 x 340 x 145	China	85322200
	130 to 140	1	6	510 x 340 x 165	China	85322200
	145 to 160	1	6	510 x 340 x 180	China	85322200
	165 to 180	1	6	510 x 340 x 200	China	85322200
	185 to 200	1	6	510 x 340 x 220	China	85322200
	205 to 220	1	6	510 x 340 x 240	China	85322200

For further information please contact sales@capxon.org

PACKAGING ▪ SCREW TERMINAL TYPE ▪ WITH STUD

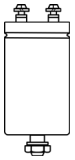

Ø D (mm)	Length L (mm)	Package layers	Box quantity (pcs)	Box size L x W x H (mm)	Country of origin	Tariff number
35	≤ 59	2	120	510 x 340 x 200	China	85322200
	60 to 69	2	120	510 x 340 x 220	China	85322200
	70 to 99	1	60	510 x 340 x 145	China	85322200
	100 to 125	1	60	510 x 340 x 165	China	85322200
51	≤ 59	2	70	510 x 340 x 200	China	85322200
	60 to 69	2	70	510 x 340 x 220	China	85322200
	70 to 99	1	35	510 x 340 x 145	China	85322200
	100 to 125	1	35	510 x 340 x 165	China	85322200
	130 to 140	1	35	510 x 340 x 180	China	85322200
	145 to 160	1	35	510 x 340 x 200	China	85322200
63.5	≤ 90	1	24	510 x 340 x 120	China	85322200
	> 90 to 115	1	24	510 x 340 x 145	China	85322200
	120 to 140	1	24	510 x 340 x 165	China	85322200
	145 to 160	1	24	510 x 340 x 200	China	85322200
	165 to 180	1	24	510 x 340 x 220	China	85322200
	185 to 200	1	24	510 x 340 x 145	China	85322200
76.2	≤ 90	1	15	510 x 340 x 120	China	85322200
	> 90 to 115	1	15	510 x 340 x 145	China	85322200
	120 to 140	1	15	510 x 340 x 180	China	85322200
	145 to 160	1	15	510 x 340 x 200	China	85322200
	165 to 180	1	15	510 x 340 x 220	China	85322200
	185 to 200	1	15	510 x 340 x 240	China	85322200
	205 to 220	1	15	510 x 340 x 280	China	85322200
89	≤ 90	1	12	510 x 340 x 120	China	85322200
	> 90 to 115	1	12	510 x 340 x 145	China	85322200
	120 to 140	1	12	510 x 340 x 180	China	85322200
	145 to 160	1	12	510 x 340 x 200	China	85322200
	165 to 180	1	12	510 x 340 x 220	China	85322200
	185 to 200	1	12	510 x 340 x 240	China	85322200
	205 to 240	1	12	510 x 340 x 280	China	85322200
100	≤ 90	1	6	510 x 340 x 120	China	85322200
	> 90 to 115	1	6	510 x 340 x 145	China	85322200
	120 to 140	1	6	510 x 340 x 180	China	85322200
	145 to 160	1	6	510 x 340 x 200	China	85322200
	165 to 180	1	6	510 x 340 x 220	China	85322200
	185 to 200	1	6	510 x 340 x 240	China	85322200
	205 to 240	1	6	510 x 340 x 280	China	85322200

ACCESSORIES FOR SCREW TERMINAL TYPE WITHOUT STUD ▪ ALL DIMENSIONS IN mm

Ring clip ▪ Two fastening brackets ▪ Material galvanized iron

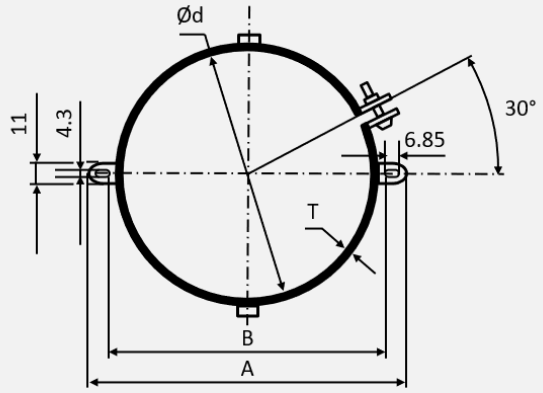

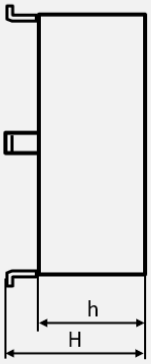

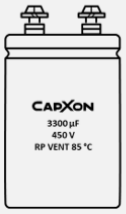

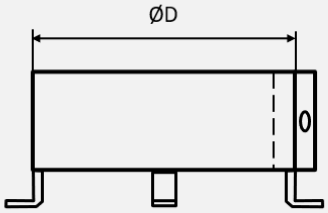

Diameter	ØD	Ød	A	B	H	h	T
Ø 35	38	36	60	43	15	12	1
Ø 51	54	52	77	58	20	15	1
Ø 63.5	66.5	64.5	95	75	30	24	1

Ring clip ▪ Three fastening brackets ▪ Material galvanized iron

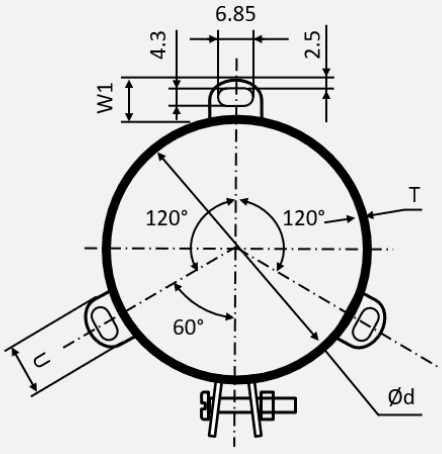

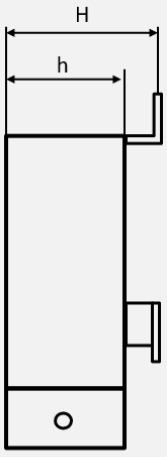

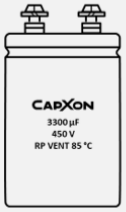

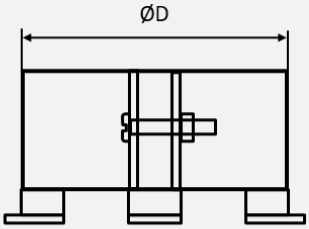

Diameter	ØD	Ød	W1	U	H	h	T
Ø 35	38	36	10.5	14	30	24	1
Ø 51	54	52	10.5	14	30	24	1
Ø 63.5	66.5	64.5	10.5	14	30	24	1
Ø 76.2	80	78	10.5	14	30	24	1
Ø 89	93	91	10.5	14	30	24	1
Ø 100	103	101	12	20	35	29	1

For further information please contact sales@capxon.org

ACCESSORIES FOR SCREW TERMINAL TYPE WITHOUT STUD ▪ ALL DIMENSIONS IN mm

Semicircle clip ▪ Two fastening brackets ▪ Material galvanized iron



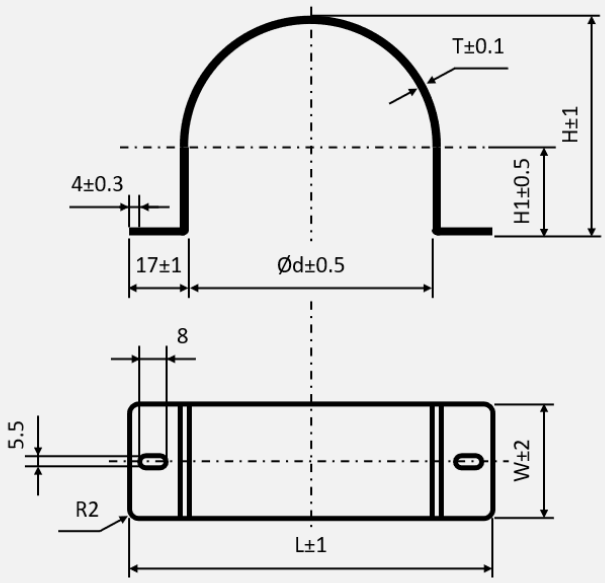

Diameter	Ød	L	W	H	H1	T
Ø 76.2	90	124	40	71	25	1

Clip loop ▪ Material PPS (Polypropylene Sulfide Plastic)

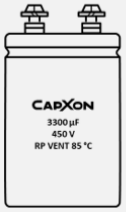

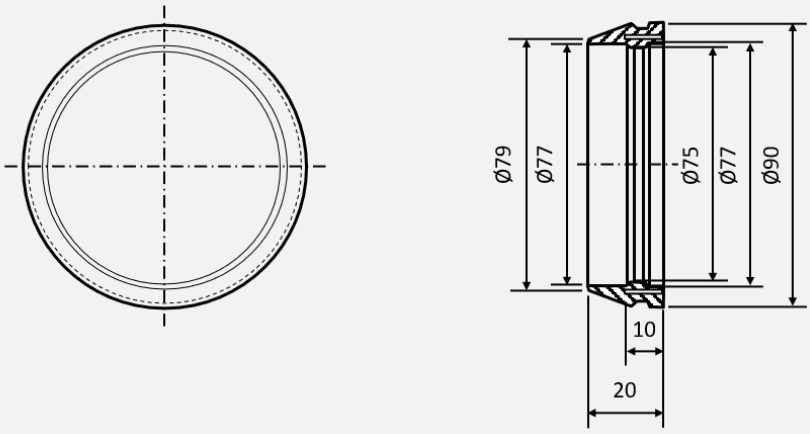

For further information please contact sales@capxon.org

ORDERING EXAMPLE



Screw terminal type example:
RP series ▪ 3300µF ▪ 450V ▪ ±20% ▪ Ø 63.5mm ▪ L 130mm ▪ M5 terminal 10.3mm ▪ without stud ▪ ring clip with two fastening brackets

1	2	3	4	5	6	7	8	9	10	11	12	13	14	15	16	17	18	19	20
R	P	3	3	2	M	4	5	0	S	A	3	0	A	5	0	Y	2	-	-
Series		Capacitance			Capacitance tolerance	Voltage			Case Ø (mm)	Height (mm)			Mounting code	Terminal code		Special requirement			

See available terminals

Code	Type
A	Without stud

Code	Special
- -	Without clip
Y2	Ring clip ▪ Two fastening brackets
Y3	Ring clip ▪ Three fastening brackets
C2	Semicircle clip ▪ Two fastening brackets
P0	Plastic clip loop

For further information please contact sales@capxon.org

ACCESSORIES FOR SCREW TERMINAL TYPE WITH M12 STUD ▪ ALL DIMENSIONS IN mm

Hex nut ▪ Material Steel

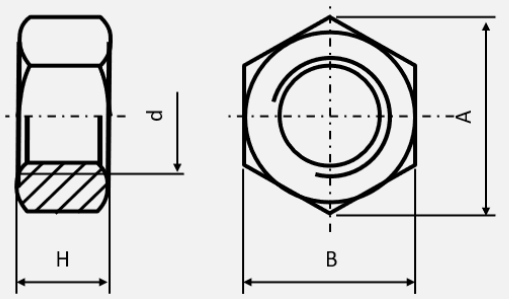

Ød	H	A (min.)	B
M12	10	20.88	19

Washer ▪ Material Steel

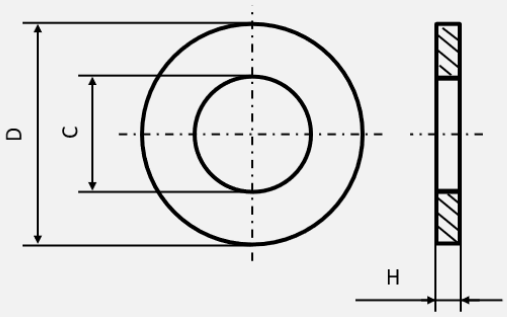

Ød	H	C	D
M12	2	13	20

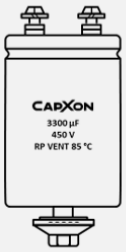

Hex nut ▪ M12 ▪ Ø 38mm ▪ Material Nylon (Polyamide)

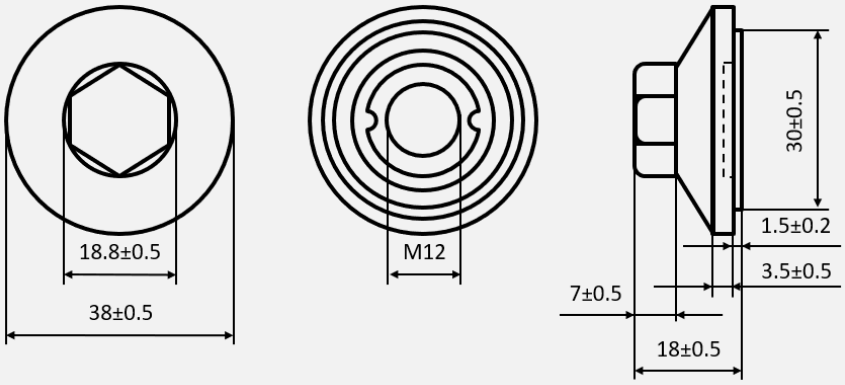



Screw size	Material	Color
M12 x 16mm	Nylon	White

Insulating shoulder washer ▪ Ø 35mm ▪ Material Nylon (Polyamide)

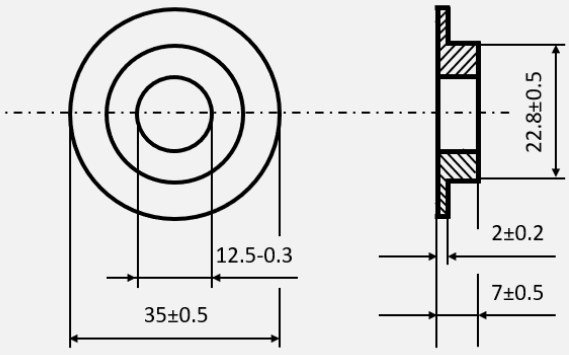



Screw size	Material	Color
M12 x 16mm	Nylon	White

For further information please contact sales@capxon.org

ORDERING EXAMPLE



Screw terminal type example:
RP series ▪ 3300µF ▪ 450V ▪ ±20% ▪ Ø 63.5mm ▪ L 130mm ▪ M5 terminal 10.3mm ▪ M12 stud ▪ M12 hex nut (Nylon) and washer (Nylon)

1	2	3	4	5	6	7	8	9	10	11	12	13	14	15	16	17	18	19	20
R	P	3	3	2	M	4	5	0	S	A	3	0	E	5	0	H	W	-	-
Series		Capacitance			Capacitance tolerance	Voltage			Case Ø (mm)	Height (mm)			Mounting code	Terminal code		Special requirement			

See available terminals

Code	Type
E	With stud

Code	Special
--	Without nut
HW	M12 hex nut (Nylon) + Washer (Nylon)
TW	M12 hex nut (Steel) + Washer (Steel)

For further information please contact sales@capxon.org

ACCESSORIES FOR SCREW TERMINAL TYPE WITH M8 STUD ▪ ALL DIMENSIONS IN mm

Hex nut ▪ Material Steel

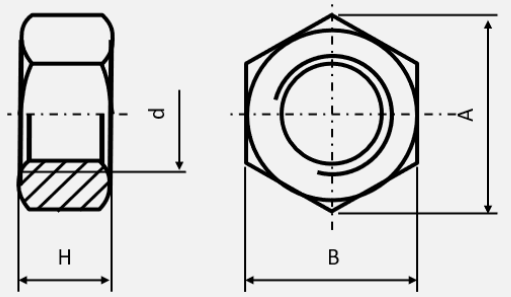

Ød	H	A (min.)	B
M8	6.5	14.2	13

Washer ▪ Material Steel

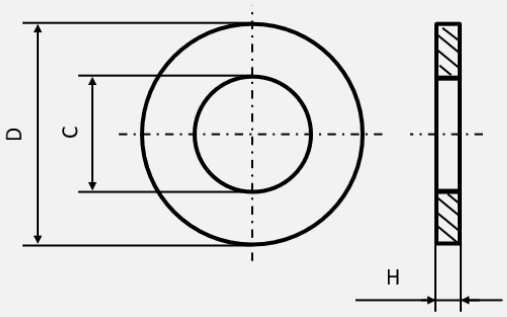

Ød	H	C	D
M8	1.6	8.4	15

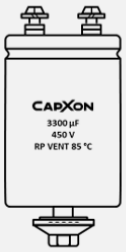

Hex nut ▪ M8 ▪ Ø 25mm ▪ Material Nylon (Polyamide)

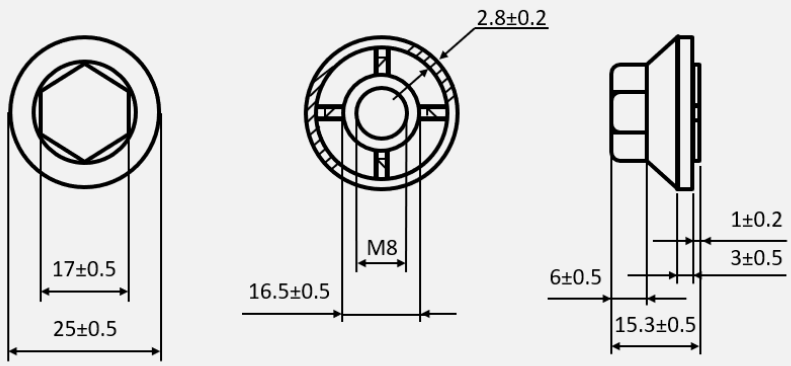



Screw size	Material	Color
M8 x 12mm	Nylon	White

ORDERING EXAMPLE



Screw terminal type example:
RP series ▪ 470µF ▪ 450V ▪ ±20% ▪ Ø 35mm ▪ L 80mm ▪ M5 terminal 10.3mm ▪ M8 stud ▪ M8 hex nut (Nylon)

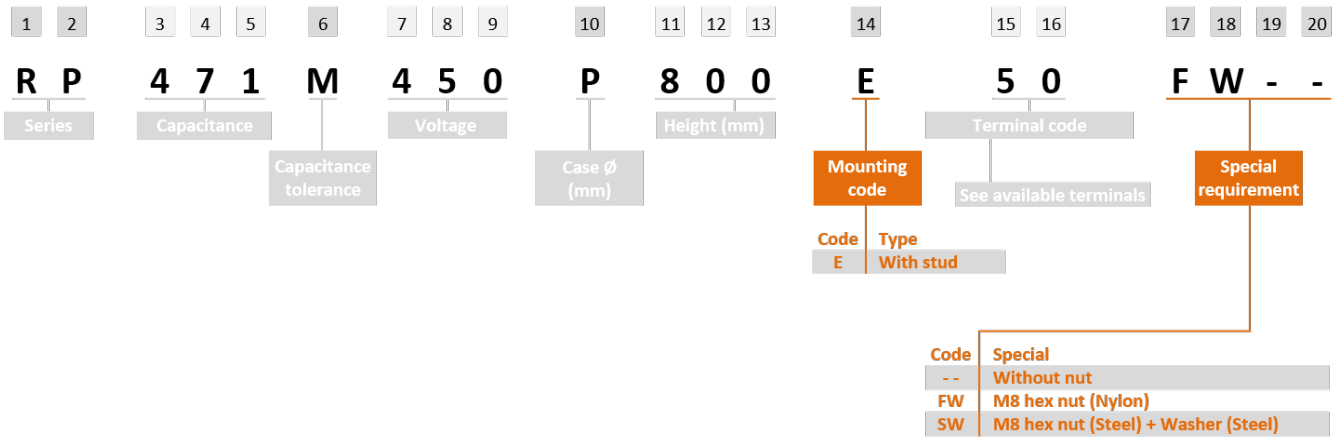

For further information please contact sales@capxon.org

Solid Conductive Polymer Capacitors

MLPC Types



OVERVIEW ▪ SMD MULTILAYER POLYMER CAPACITORS (MLPC)

Features

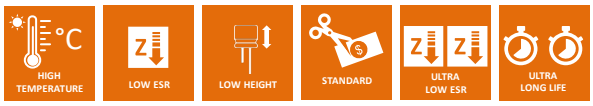

Series	Page	High Temperature	High Voltage	Low ESR	Low Height	Standard	Ultra Long Life	Temperature Range (°C)		Voltage Range (V)		Capacitance Range (µF)		Endurance (hours)
XA	694			●	●			-55	+105	2	25	10	470	2000

For further information please contact sales@capxon.org

XA SERIES ▪ ULTRA FLAT MULTILAYER TYPE



KEY FEATURES

LOW PROFILE

NEW PRODUCT SERIES
Preliminary Data

- **MLPC - MULTILAYER CONDUCTIVE POLYMER** ▪ SMD type
- Endurance: 105°C ▪ 2000 hours
- Ultra-low ESR and highest ripple current
- No voltage derating
- No dry-out effect guarantees extremely long life

HF Halogen Free · MSL 3 · RoHS & REACH COMPLIANT

SPECIFICATIONS

Items		Performance Characteristics
Operating Temperature Range		-55 ~ +105°C
Rated Voltage Range	V_R	2 ~ 25V DC
Surge Voltage	V_S	$V_S = 1.15 \cdot V_R$
Capacitance Range	C_R	10 ~ 470µF
Cap. Tolerance	ΔC	±20% (120Hz ▪ 20°C)
Leakage Current (20°C ▪ V_R applied)	I_{LEAK}	≤ $0.1 \cdot C_R \cdot V_R$ (µA) [≤ 6.3VDC]; ≤ $0.3 \cdot C_R \cdot V_R$ (µA) [> 6.3VDC] After 2 minutes
Dissipation Factor % (20°C ▪ 120Hz)	tanδ	Not to exceed the values shown in standard ratings
Equivalent Series Resistance (20°C ▪ 100kHz)	ESR	Not to exceed the values shown in standard ratings

Lifetime Test			
Endurance 105°C (V_R applied)	Test	**2000 hours**	
	△C/C_R	Within ±20% of the initial value	
	tanδ	< 2 times of the initial limit	
	ESR	Less than 200% of the specified value	
	I_{Leak}	< 3 times of the initial limit	≤ 6.3 V DC
		Within the initial limit	> 6.3 V DC
Moisture Resistance stored at 60°C (RH 90 ~ 95%)	Test	**500 hours**	
	△C/C_R	Within +70 to -20% of the initial value	
	tanδ	< 2 times of the initial limit	
	ESR	Less than 200% of the specified value	
	I_{Leak}	< 3 times of the initial limit	≤ 6.3 V DC
		Within the initial limit	> 6.3 V DC

DIMENSIONS ▪ All dimensions in mm

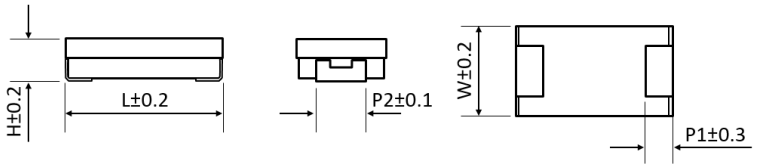

L	W	H	P1	P2
7.3	4.3	1.9	1.3	2.4

For further information please contact sales@capxon.org

STANDARD RATINGS

NEW PRODUCT SERIES

Preliminary Data

Part number shows blister tape on plastic reel

V_R (V)	C_R (µF)	L (mm)	W (mm)	H (mm)	I_{LEAK} (µA, 2min)	tanδ +20°C ▪ 120Hz (%)	Max. ESR +20°C ▪ 100kHz (mΩ)	Max. I_R +45°C ▪ 100kHz (mA rms)	CapXon Part Number
2	180	7.3	4.3	1.9	36	6	12	5600	XA181M0027019P120
							9	6300	XA181M0027019P090
	220				44		12	5600	XA221M0027019P120
							9	6300	XA221M0027019P090
	270				54		9	6300	XA271M0027019P090
							6	7500	XA271M0027019P060
	330				66		9	6300	XA331M0027019P090
							6	7500	XA331M0027019P060
	390				78		9	6300	XA391M0027019P090
							6	7500	XA391M0027019P060
	470				94		9	6300	XA471M0027019P090
							6	7500	XA471M0027019P060
2.5	150	7.3	4.3	1.9	38	6	12	5600	XA151M2R57019P120
							9	6300	XA151M2R57019P090
	180				45		12	5600	XA181M2R57019P120
							9	6300	XA181M2R57019P090
	220				55		9	6300	XA221M2R57019P090
							6	7500	XA221M2R57019P060
	270				68		9	6300	XA271M2R57019P090
							6	7500	XA271M2R57019P060
	330				83		9	6300	XA331M2R57019P090
							6	7500	XA331M2R57019P060
	390				98		9	6300	XA391M2R57019P090
							6	7500	XA391M2R57019P060
	470				118		9	6300	XA471M2R57019P090
							6	7500	XA471M2R57019P060
4	82	7.3	4.3	1.9	33	6	15	5100	XA820M0047019P150
							12	5600	XA820M0047019P120
	100				40		15	5100	XA101M0047019P150
							12	5600	XA101M0047019P120
	120				48		12	5600	XA121M0047019P120
							9	6300	XA121M0047019P090
	150				60		12	5600	XA151M0047019P120
							9	6300	XA151M0047019P090
	180				72		12	5600	XA181M0047019P120
							9	6300	XA181M0047019P090

For further information please contact sales@capxon.org

STANDARD RATINGS

NEW PRODUCT SERIES
Preliminary Data

Part number shows blister tape on plastic reel

V_R (V)	C_R (µF)	L (mm)	W (mm)	H (mm)	I_{LEAK} (µA, 2min)	tanδ +20°C ▪ 120Hz (%)	Max. ESR +20°C ▪ 100kHz (mΩ)	Max. I_R +45°C ▪ 100kHz (mA rms)	CapXon Part Number
4	220	7.3	4.3	1.9	88	6	12	5600	XA221M0047019P120
							9	6300	XA221M0047019P090
6.3	68	7.3	4.3	1.9	43	6	15	5100	XA680M6R37019P150
							12	5600	XA680M6R37019P120
	100				63		15	5100	XA101M6R37019P150
							12	5600	XA101M6R37019P120
	120				76		12	5600	XA121M6R37019P120
							9	6300	XA121M6R37019P090
	150				95		12	5600	XA151M6R37019P120
							9	6300	XA151M6R37019P090
8	47	7.3	4.3	1.9	113	6	40	3200	XA470M0087019P400
	68				163		40	3200	XA680M0087019P400
	82				197		40	3200	XA820M0087019P400
	100				240		40	3200	XA101M0087019P400
	120				288		40	3200	XA121M0087019P400
10	47	7.3	4.3	1.9	141	6	40	3200	XA470M0107019P400
	68				204		40	3200	XA680M0107019P400
	82				246		40	3200	XA680M0107019P400
	100				300		40	3200	XA101M0107019P400
16	10	7.3	4.3	1.9	48	6	60	2600	XA100M0167019P600
	15				72		40	3200	XA150M0167019P400
	22				105		40	3200	XA220M0167019P400
	33				158		40	3200	XA330M0167019P400
	47				225		40	3200	XA470M0167019P400
	56				268		40	3200	XA560M0167019P400
	68				326		40	3200	XA680M0167019P400
20	10	7.3	4.3	1.9	60	6	40	3200	XA100M0207019P400
	15				90		40	3200	XA150M0207019P400
	22				132		40	3200	XA220M0207019P400
	33				198		40	3200	XA330M0207019P400
	47				282		40	3200	XA470M0207019P400
25	10	7.3	4.3	1.9	75	6	40	3200	XA100M0257019P400
	15				113		40	3200	XA150M0257019P400
	22				165		40	3200	XA220M0257019P400
	33				248		40	3200	XA330M0257019P400

MULTIPLIER K_I for RIPPLE CURRENT vs. SURFACE TEMPERATURE T_S

Temperature T_S		$T_S \le 45°C$	$45°C \le T_S < 85°C$	$85°C \le T_S \le 105°C$
K_I	V_R: 2V ~ 6.3V	1	0.7	0.25
K_I	V_R: 8V ~ 25V	1	0.8	0.5

For further information please contact sales@capxon.org

PRECAUTIONS, GUIDELINES AND PACKAGING INFORMATON

Unless otherwise agreed in individual specifications, all products are subject to our “General Precautions and Guidelines” as well as our “Packaging Information”. Please refer to the following links in the table.

General Precautions and Guidelines	Packaging Information Polymer MLPC
Page 837	Page 698

DISCLAIMER

All product related data (e.g. specification, statements and general information) are subject to change without any notice. It is necessary that the customer observes all product related technical / application information and handling instructions.

CapXon products are designed and manufactured according to severe quality and safety standards. Under no circumstance, CapXon warrants that any CapXon product is suitable for the purposes intended for your application, even CapXon knows the application. It is customer's duty and obligation to check and make sure that CapXon products are suitable for the purposes intended and select the correct and proper CapXon product. Customers are requested to perform a sufficient validation and reliability evaluation to assure needed safety level and reliability performance by suitable designs and to apply proper safeguards (e.g. redundancies, protective circuits).

Particular operating conditions (ambient temperature, ripple current, voltage, thermal resistance, etc.) as well as storage, production or assembly may affect the performance and the lifetime of the capacitor. Please consult CapXon for lifetime estimation, failure mode considerations or worst-case scenarios according to the product technology, product tolerances / deviations or change of the characteristics of the capacitor due to shipment, storage, handling, production and usage.

For aerospace or military application, life-saving, life-sustaining, safety critical applications or any application where failure may cause severe personal injury or death, please consult us before design-in the capacitor in your application.

Except for the written expressed warranties, CapXon does not impliedly, by assumption or whatever else, warrant, undertake, promise any other warranty or guaranty for any CapXon product.

For further information, please visit our website www.capxongroup.com or contact CapXon directly.

PRODUCT CODE ▪ SMD MLPC - MULTILAYER POLYMER CAPACITORS

SMD type example:
XA series ▪ 100µF ▪ 6.3V ▪ ±20% ▪ L x W 7.3 x 4.3mm ▪ H 1.9mm ▪ 15mΩ ▪ Tape & Reel

1	2	3	4	5	6	7	8	9	10	11	12	13	14	15	16	17	18	19	20
X	A	1	0	1	M	6	R	3	7	0	1	9	P	1	5	0	-	-	-
Series		Capacitance			Capacitance tolerance	Voltage			Case L x W (mm)	Height (mm)			Type code	ESR (mΩ)			Special requirement		

Code	µF
010	1
4R7	4.7
100	10
101	100
102	1000
152	1500

Code	%
M	±20

Code	Volt
002	2
2R5	2.5
004	4
6R3	6.3
008	8
010	10
016	16
025	25

Code	L x W
7	7.3 x 4.3

Code	H
019	1.9

Code	Type
P	Polymer

Code	ESR
4R5	4.5
060	6
090	9
120	12
150	15
300	30
400	40
600	60

Please consult CapXon for further assistance

MARKING ▪ SMD MLPC - MULTILAYER POLYMER CAPACITORS

MLPC - Multilayer Polymer Capacitor ▪ SMD type



CX: Manufacturer trademark = CapXon
331: Nominal capacitance (µF) ▪ 331 = 330µF
d: Rated voltage ▪ d = 2V (see table)
(+) polarity (Anode indicate)

025: Production datacode year/week
(ex. 025 = 2020/25th week)

Top view



Rated voltage code	d	e	g	j	A	C	D	E
Rated voltage	2V	2.5V	4V	6.3V	10V	16V	20V	25V

DIMENSIONS AND PAD LAYOUT ▪ All dimensions in mm

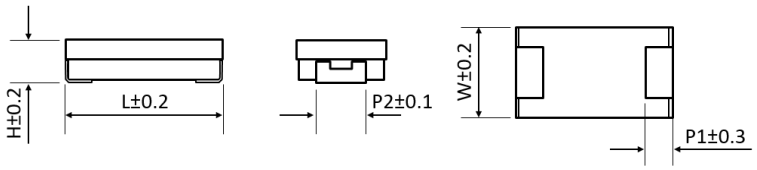

L	W	H	P1	P2
7.3	4.3	1.9	1.3	2.4

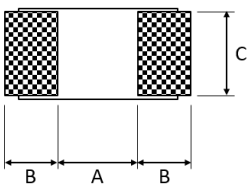

A	B	C
3.8	2.5	4

For further information please contact sales@capxon.org

TAPING ▪ SMD MLPC - MULTILAYER POLYMER CAPACITORS ▪ REEL PACK

MLPC tape (unit: mm)

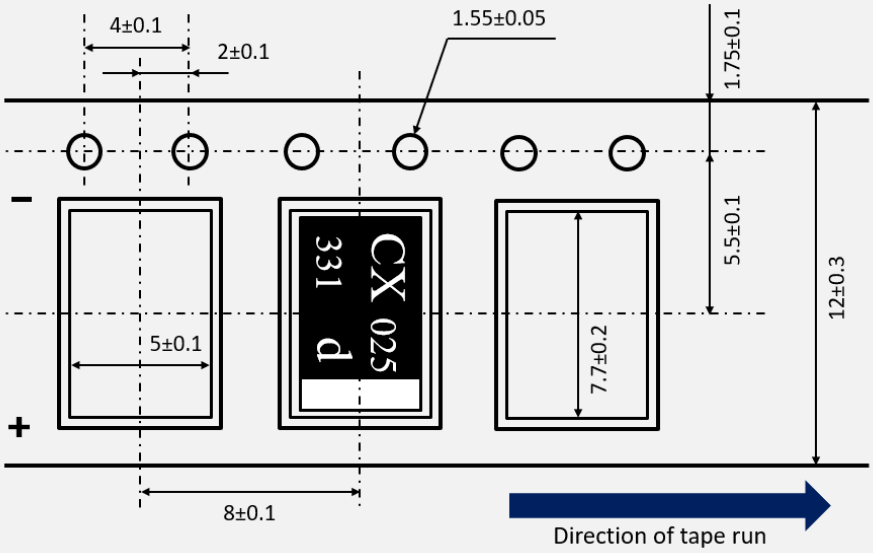

Reel (unit: mm)

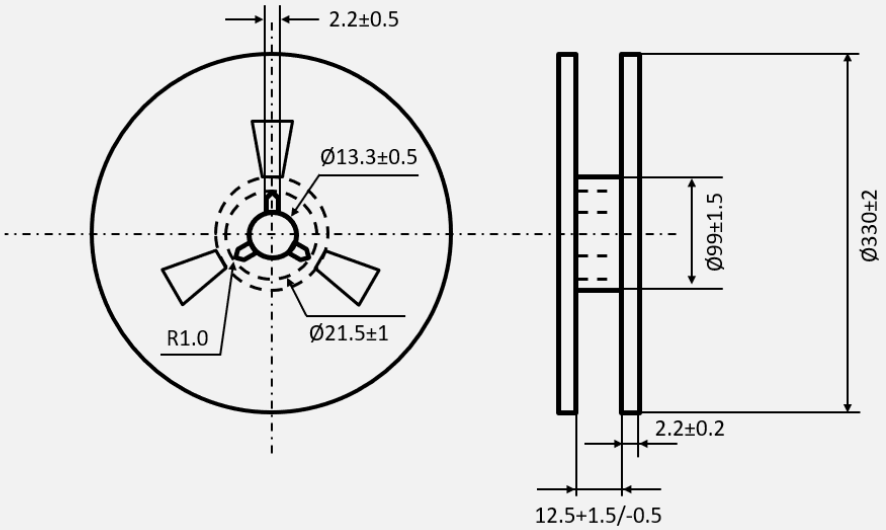

Cover tape (unit: mm)

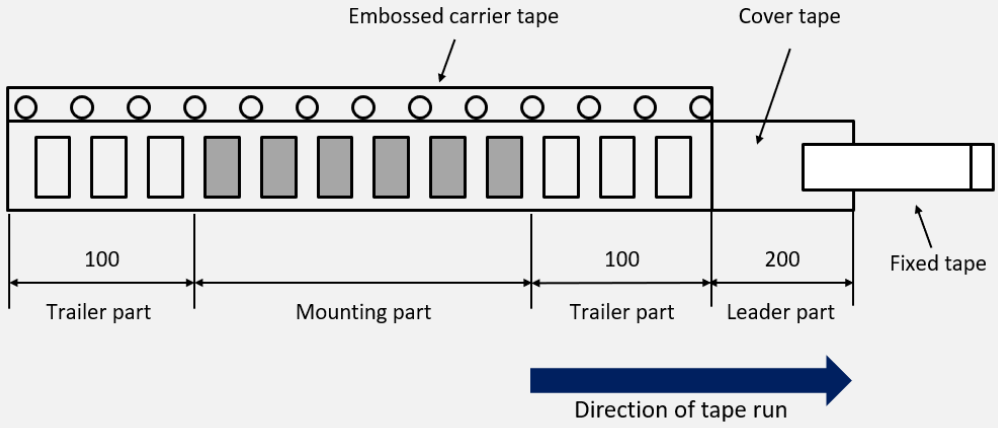

For further information please contact sales@capxon.org

TAPING ▪ SMD MLPC - MULTILAYER POLYMER CAPACITORS ▪ REEL PACK

Cover tape

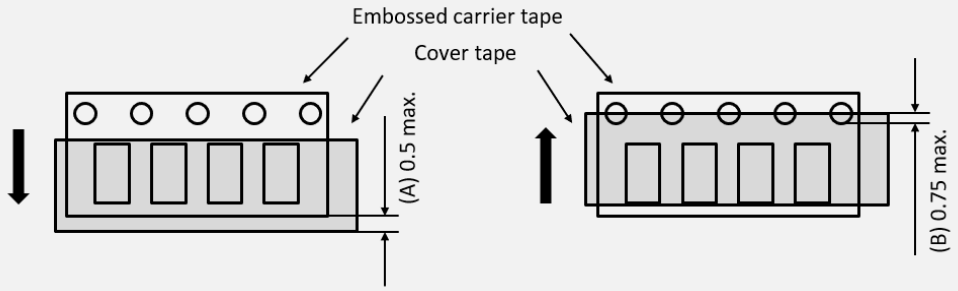

The cover tape covered the sprocket holes shall not exceed the limit as following:

a. Deviation between carrier tape and seal tape shall be less than 0.5mm.
b. Seal tape covered on the feeding holes shall be less than 0.75mm.

Reel

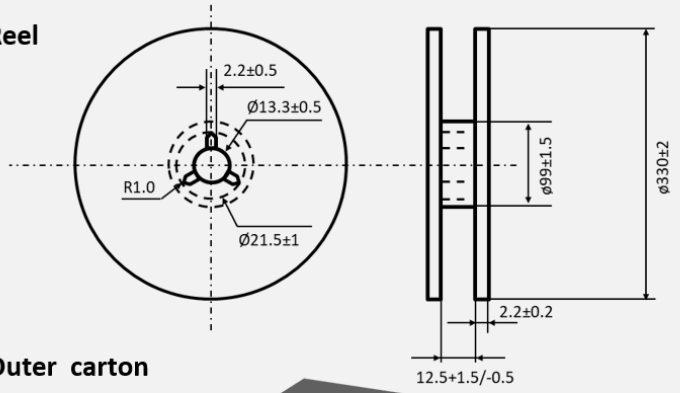

Outer carton

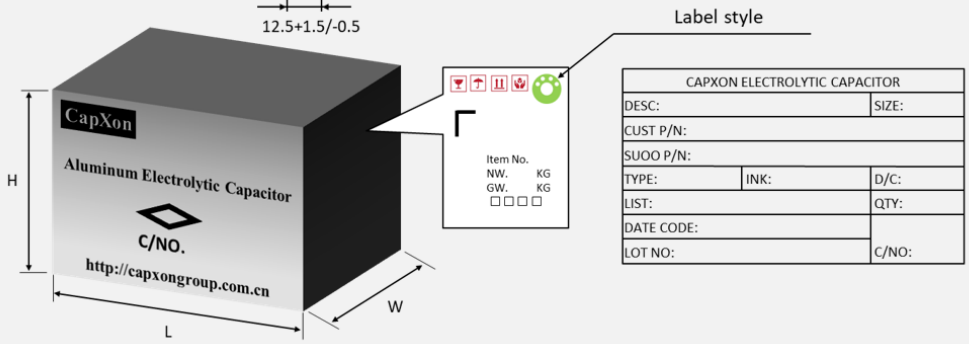

Series	Reel quantity (pcs)	Outer box quantity (pcs)	Outer box size L x W x H (mm)	Country of origin	Tariff number
XA	3500	17500	395 x 395 x 130	China	85322200

Solid Conductive Polymer Capacitors

SMD Types



OVERVIEW ▪ SMD CONDUCTIVE POLYMER CAPACITORS

Features

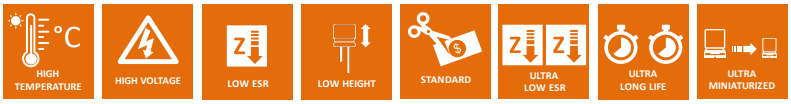

Series	Page	High Temperature	High Voltage	Low ESR	Low Height	Standard	Ultra Long Life	Temperature Range (°C)		Voltage Range (V)		Capacitance Range (µF)		Endurance (hours)
PD	703		●	●		●	●	-55	+105	2.5	100	10	3300	2000
PM	708		●	●	●			-55	+105	2.5	100	4.7	560	2000
PV	714		●	●	●			-55	+105	2.5	100	6.8	2500	2000
PR	719			●				-55	+105	6.3	50	10	1500	5000
PG	723	●		●				-55	+125	6.3	50	10	1500	2000

For further information please contact sales@capxon.org

PD SERIES ▪ STANDARD TYPE



KEY FEATURES

- **SOLID CONDUCTIVE POLYMER** ▪ SMD type
- Low ESR at high frequency range
- Endurance: 105°C ▪ 2000 hours
- Large permissible ripple current
- No dry-out effect guarantees extremely long life

SPECIFICATIONS

Items		Performance Characteristics
Operating Temperature Range		-55 ~ +105°C
Rated Voltage Range	V_R	2.5 ~ 100V DC
Surge Voltage	V_S	($V_R \le 20V$): $V_S = 1.15 \cdot V_R$ ($V_R \ge 25V$): $V_S = 1.10 \cdot V_R$
Capacitance Range	C_R	10 ~ 3300µF
Cap. Tolerance	ΔC	±20% (120Hz ▪ 20°C)
Leakage Current (20°C ▪ V_R applied)	I_{LEAK}	Not to exceed the values shown in standard ratings After 2 minutes
Dissipation Factor % (20°C ▪ 120Hz)	tanδ	Not to exceed the values shown in standard ratings
Equivalent Series Resistance (20°C ▪ 100kHz)	ESR	Not to exceed the values shown in standard ratings

Lifetime Test		
Endurance 105°C (V_R applied)	Test	**2000 hours**
	$\triangle C/C_R$	Within ±20% of the initial value
	tanδ	Not to exceed 150% of the value specified
	ESR	Not to exceed 150% of the value specified
	I_{Leak}	Less than the specified value
Moisture Resistance stored at 60°C (RH 90 ~ 95%)	Test	**1000 hours**
	$\triangle C/C_R$	Within ±20% of the initial value
	tanδ	Not to exceed 150% of the value specified
	ESR	Not to exceed 150% of the value specified
	I_{Leak}	Less than the specified value

DIMENSIONS STANDARD PACKAGE ▪ All dimensions in mm

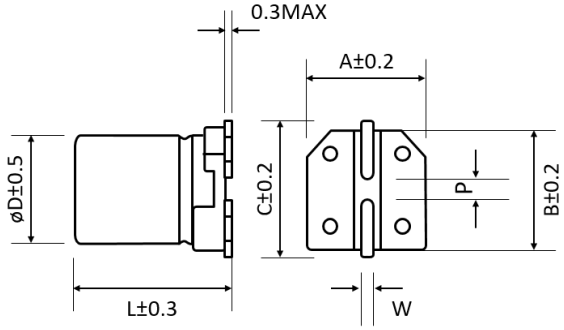

ø D	L	A	B	C	W	P±0.2
8	11.7	8.3	8.3	9	0.7 to 1.1	3.1
10	12.4	10.3	10.3	11	0.7 to 1.1	4.5

For further information please contact sales@capxon.org

STANDARD RATINGS

Part number shows blister tape on paper reel

V_R (V)	C_R (µF)	ø D (mm)	L (mm)	I_{LEAK} (µA, 2min)	tanδ +20°C ▪ 120Hz (%)	Max. ESR +20°C ▪ 100kHz (mΩ)	I_R ▪ Max. Ripple Current +105°C ▪ 100kHz (mA rms)	CapXon Part Number
2.5	560	8	11.7	280	8	9	5200	PD561M2R5F117PTR
	680	8	11.7	340	8	9	5200	PD681M2R5F117PTR
	820	8	11.7	410	8	9	5400	PD821M2R5F117PTR
	1000	8	11.7	500	8	9	5400	PD102M2R5F117PTR
	1500	8	11.7	750	8	9	5400	PD152M2R5F117PTR
	1500	10	12.4	750	8	9	5600	PD152M2R5G124PTR
	2500	10	12.4	1250	8	9	5600	PD252M2R5G124PTR
	2700	10	12.4	1350	10	9	5600	PD272M2R5G124PTR
	3300	10	12.4	1650	10	9	5600	PD332M2R5G124PTR
4	560	8	11.7	448	8	9	5200	PD561M004F117PTR
	680	8	11.7	544	8	9	5200	PD681M004F117PTR
	820	8	11.7	656	8	9	5200	PD821M004F117PTR
	1000	8	11.7	800	10	9	5200	PD102M004F117PTR
	1200	8	11.7	960	10	9	5200	PD122M004F117PTR
	1200	10	12.4	960	10	9	5600	PD122M004G124PTR
	1500	8	11.7	1200	10	9	5200	PD152M004F117PTR
	1500	10	12.4	1200	10	9	5600	PD152M004G124PTR
	1800	10	12.4	1440	10	9	5600	PD182M004G124PTR
	2200	10	12.4	1760	10	9	5600	PD222M004G124PTR
	2500	10	12.4	2000	10	9	5600	PD252M004G124PTR
	2700	10	12.4	2160	10	9	5600	PD272M004G124PTR
6.3	180	8	11.7	227	8	9	5200	PD181M6R3F117PTR
	270	8	11.7	340	8	9	5200	PD271M6R3F117PTR
	330	8	11.7	416	8	9	5200	PD331M6R3F117PTR
	390	8	11.7	491	8	9	5200	PD391M6R3F117PTR
	470	8	11.7	592	8	9	5200	PD471M6R3F117PTR
	560	8	11.7	706	8	9	5200	PD561M6R3F117PTR
	680	10	12.4	856	8	9	5500	PD681M6R3G124PTR
	820	8	11.7	1033	10	9	5200	PD821M6R3F117PTR
	820	10	12.4	1033	10	9	5500	PD821M6R3G124PTR
	1000	8	11.7	1260	10	9	5200	PD102M6R3F117PTR
	1000	10	12.4	1260	10	9	5500	PD102M6R3G124PTR
	1500	10	12.4	1890	10	9	5500	PD152M6R3G124PTR
	2000	10	12.4	2520	10	9	5500	PD202M6R3G124PTR
	2200	10	12.4	2772	10	9	5500	PD222M6R3G124PTR
10	180	8	11.7	360	8	9	5200	PD181M010F117PTR
	220	8	11.7	440	8	9	5200	PD221M010F117PTR
	270	8	11.7	540	8	9	5200	PD271M010F117PTR
	330	8	11.7	660	8	9	5200	PD331M010F117PTR
	390	8	11.7	780	8	9	5200	PD391M010F117PTR
	470	8	11.7	940	8	9	5200	PD471M010F117PTR
	470	10	12.4	940	8	9	5500	PD471M010G124PTR
	560	8	11.7	1120	8	9	5200	PD561M010F117PTR
	560	10	12.4	1120	8	9	5500	PD561M010G124PTR

For further information please contact sales@capxon.org

STANDARD RATINGS

Part number shows blister tape on paper reel

V_R (V)	C_R (µF)	ø D (mm)	L (mm)	I_{LEAK} (µA, 2min)	tanδ +20°C ▪ 120Hz (%)	Max. ESR +20°C ▪ 100kHz (mΩ)	I_R ▪ Max. Ripple Current +105°C ▪ 100kHz (mA rms)	CapXon Part Number
10	680	8	11.7	1360	10	9	5200	PD681M010F117PTR
	680	10	12.4	1360	10	9	5500	PD681M010G124PTR
	820	10	12.4	1640	10	9	5500	PD821M010G124PTR
	1000	10	12.4	2000	10	9	5500	PD102M010G124PTR
	1200	10	12.4	2400	10	9	5500	PD122M010G124PTR
	1500	10	12.4	3000	10	9	5500	PD152M010G124PTR
16	180	8	11.7	576	8	15	4700	PD181M016F117PTR
	220	8	11.7	704	8	15	4700	PD221M016F117PTR
	220	10	12.4	704	8	15	5100	PD221M016G124PTR
	270	8	11.7	864	8	15	4700	PD271M016F117PTR
	270	10	12.4	864	8	15	5100	PD271M016G124PTR
	330	8	11.7	1056	8	15	4700	PD331M016F117PTR
	330	10	12.4	1056	8	15	5100	PD331M016G124PTR
	390	8	11.7	1248	10	15	4700	PD391M016F117PTR
	470	10	12.4	1504	10	15	5100	PD471M016G124PTR
	560	8	11.7	1792	12	14	4950	PD561M016F117PTR
	680	10	12.4	2176	10	15	5100	PD681M016G124PTR
	820	10	12.4	2624	10	15	5100	PD821M016G124PTR
	1000	10	12.4	3200	12	14	5400	PD102M016G124PTR
20	39	8	11.7	156	8	20	4210	PD390M020F117PTR
	68	8	11.7	272	8	20	4210	PD680M020F117PTR
	82	8	11.7	328	8	20	4210	PD820M020F117PTR
	100	8	11.7	400	8	20	4210	PD101M020F117PTR
	100	10	12.4	400	8	20	4800	PD101M020G124PTR
	150	10	12.4	600	10	20	4800	PD151M020G124PTR
	180	10	12.4	720	10	20	4800	PD181M020G124PTR
	220	8	11.7	880	10	22	4000	PD221M020F117PTR
	220	10	12.4	880	10	20	4800	PD221M020G124PTR
	270	8	11.7	1080	10	22	4000	PD271M020F117PTR
	270	10	12.4	1080	10	20	4800	PD271M020G124PTR
	330	10	12.4	1320	10	20	4800	PD331M020G124PTR
	390	8	11.7	1560	12	14	4950	PD391M020F117PTR
	470	10	12.4	1880	12	20	4800	PD471M020G124PTR
	680	10	12.4	2720	12	16	5000	PD681M020G124PTR
25	33	8	11.7	165	8	25	3800	PD330M025F117PTR
	47	8	11.7	235	8	20	4210	PD470M025F117PTR
	56	10	12.4	280	8	28	3800	PD560M025G124PTR
	82	8	11.7	410	8	20	4210	PD820M025F117PTR
	100	8	11.7	500	10	20	4210	PD101M025F117PTR
	100	10	12.4	500	10	20	4800	PD101M025G124PTR
	180	8	11.7	900	10	25	3800	PD181M025F117PTR
	180	10	12.4	900	10	20	4800	PD181M025G124PTR
	220	8	11.7	1100	10	25	3800	PD221M025F117PTR
	220	10	12.4	1100	10	20	4800	PD221M025G124PTR

For further information please contact sales@capxon.org

STANDARD RATINGS

Part number shows blister tape on paper reel

V_R (V)	C_R (µF)	ø D (mm)	L (mm)	I_{LEAK} (µA, 2min)	tanδ +20°C ▪ 120Hz (%)	Max. ESR +20°C ▪ 100kHz (mΩ)	I_R ▪ Max. Ripple Current +105°C ▪ 100kHz (mA rms)	CapXon Part Number
25	270	10	12.4	1350	10	20	4800	PD271M025G124PTR
	330	8	11.7	1650	12	20	4210	PD331M025F117PTR
	330	10	12.4	1650	12	22	4200	PD331M025G124PTR
	390	10	12.4	1950	12	22	4200	PD391M025G124PTR
	470	10	12.4	2350	12	25	3800	PD471M025G124PTR
35	39	8	11.7	273	12	32	2700	PD390M035F117PTR
	68	8	11.7	476	12	28	3300	PD680M035F117PTR
	82	8	11.7	574	12	28	3300	PD820M035F117PTR
	100	10	12.4	700	12	25	3800	PD101M035G124PTR
	120	8	11.7	840	12	25	3800	PD121M035F117PTR
	150	8	11.7	840	12	25	3800	PD151M035F117PTR
	150	10	12.4	1050	12	25	3800	PD151M035G124PTR
	180	10	12.4	1260	12	22	4100	PD181M035G124PTR
	220	10	12.4	1540	12	22	4100	PD221M035G124PTR
	270	10	12.4	1890	12	20	4400	PD271M035G124PTR
	330	10	12.4	2310	12	20	4400	PD331M035G124PTR
50	10	8	11.7	100	12	40	1800	PD100M050F117PTR
	22	8	11.7	220	12	40	1800	PD220M050F117PTR
	33	8	11.7	300	12	35	2000	PD330M050F117PTR
	39	8	11.7	390	12	30	2300	PD390M050F117PTR
	47	8	11.7	470	12	30	2300	PD470M050F117PTR
	56	8	11.7	560	12	30	2500	PD560M050F117PTR
	56	10	12.4	560	12	25	3000	PD560M050G124PTR
	68	10	12.4	680	12	25	3000	PD680M050G124PTR
	100	10	12.4	1000	12	25	3000	PD101M050G124PTR
63	22	8	11.7	277	12	35	1800	PD220M063F117PTR
	27	8	11.7	340	12	35	2200	PD270M063F117PTR
	33	8	11.7	416	12	35	2200	PD330M063F117PTR
	33	10	12.4	416	12	30	2500	PD330M063G124PTR
	39	8	11.7	491	12	35	2200	PD390M063F117PTR
	47	10	12.4	592	12	30	2500	PD470M063G124PTR
	56	10	12.4	706	12	30	2500	PD560M063G124PTR
	68	10	12.4	857	12	30	2500	PD680M063G124PTR
80	12	8	11.7	192	12	40	1800	PD120M080F117PTR
	22	10	12.4	352	12	38	2300	PD220M080G124PTR
	47	10	12.4	752	12	40	1800	PD470M080G124PTR
100	10	8	11.7	200	12	45	1700	PD100M100F117PTR
	18	10	12.4	360	12	40	2100	PD180M100G124PTR
	22	10	12.4	440	12	40	2100	PD220M100G124PTR

MULTIPLIER K_f for RIPPLE CURRENT vs. FREQUENCY

Frequency (Hz)	120 ≤ Freq. < 1k	1k ≤ Freq. < 10k	10k ≤ Freq. < 100k	100k ≤ Freq. < 300k
Coefficient K_f	0.05	0.3	0.7	1

PRECAUTIONS, GUIDELINES AND PACKAGING INFORMATON

Unless otherwise agreed in individual specifications, all products are subject to our “General Precautions and Guidelines” as well as our “Packaging Information”. Please refer to the following links in the table.

General Precautions and Guidelines	Packaging Information Polymer SMD
Page 837	Page 727

DISCLAIMER

All product related data (e.g. specification, statements and general information) are subject to change without any notice. It is necessary that the customer observes all product related technical / application information and handling instructions.

CapXon products are designed and manufactured according to severe quality and safety standards. Under no circumstance, CapXon warrants that any CapXon product is suitable for the purposes intended for your application, even CapXon knows the application. It is customer's duty and obligation to check and make sure that CapXon products are suitable for the purposes intended and select the correct and proper CapXon product. Customers are requested to perform a sufficient validation and reliability evaluation to assure needed safety level and reliability performance by suitable designs and to apply proper safeguards (e.g. redundancies, protective circuits).

Particular operating conditions (ambient temperature, ripple current, voltage, thermal resistance, etc.) as well as storage, production or assembly may affect the performance and the lifetime of the capacitor. Please consult CapXon for lifetime estimation, failure mode considerations or worst-case scenarios according to the product technology, product tolerances / deviations or change of the characteristics of the capacitor due to shipment, storage, handling, production and usage.

For aerospace or military application, life-saving, life-sustaining, safety critical applications or any application where failure may cause severe personal injury or death, please consult us before design-in the capacitor in your application.

Except for the written expressed warranties, CapXon does not impliedly, by assumption or whatever else, warrant, undertake, promise any other warranty or guaranty for any CapXon product.

For further information, please visit our website www.capxongroup.com or contact CapXon directly.

PM SERIES ▪ LOW HEIGHT TYPE



KEY FEATURES

LOW HEIGHT

- **SOLID CONDUCTIVE POLYMER** ▪ SMD type
- Low height for space critical applications
- Endurance: 105°C ▪ 2000 hours
- Large permissible ripple current
- No dry-out effect guarantees extremely long life

HF Halogen Free · MSL 1 · RoHS & REACH COMPLIANT

SPECIFICATIONS

Items		Performance Characteristics
Operating Temperature Range		-55 ~ +105°C
Rated Voltage Range	V_R	2.5 ~ 100V DC
Surge Voltage	V_S	($V_R \le 20V$): $V_S = 1.15 \cdot V_R$ ($V_R \ge 25V$): $V_S = 1.10 \cdot V_R$
Capacitance Range	C_R	4.7 ~ 560µF
Cap. Tolerance	ΔC	±20% (120Hz ▪ 20°C)
Leakage Current (20°C ▪ V_R applied)	I_{LEAK}	Not to exceed the values shown in standard ratings After 2 minutes
Dissipation Factor % (20°C ▪ 120Hz)	tanδ	Not to exceed the values shown in standard ratings
Equivalent Series Resistance (20°C ▪ 100kHz)	ESR	Not to exceed the values shown in standard ratings

Lifetime Test		
Endurance 105°C (V_R applied)	Test	**2000 hours**
	△C/C_R	Within ±20% of the initial value
	tanδ	Not to exceed 150% of the value specified
	ESR	Not to exceed 150% of the value specified
	I_{Leak}	Less than the specified value
Moisture Resistance stored at 60°C (RH 90 ~ 95%)	Test	**1000 hours**
	△C/C_R	Within ±20% of the initial value
	tanδ	Not to exceed 150% of the value specified
	ESR	Not to exceed 150% of the value specified
	I_{Leak}	Less than the specified value

DIMENSIONS STANDARD PACKAGE ▪ All dimensions in mm

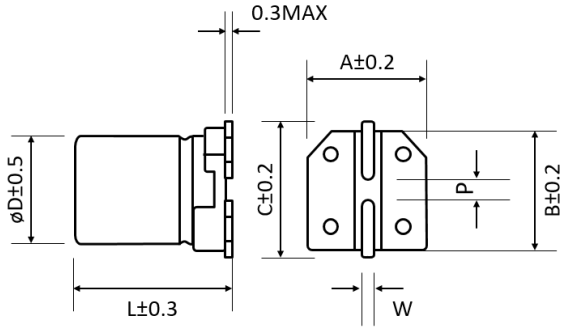

ø D	L	A	B	C	W	P±0.2
4	5.5	4.3	4.3	5.1	0.5 to 0.8	1
5	5.5	5.3	5.3	5.9	0.5 to 0.8	1.4
5	5.8	5.3	5.3	5.9	0.5 to 0.8	1.4
6.3	5.8	6.6	6.6	7.2	0.5 to 0.8	2.2
6.3	7.7	6.6	6.6	7.2	0.5 to 0.8	2.2

For further information please contact sales@capxon.org

STANDARD RATINGS

Part number shows blister tape on paper reel

V_R (V)	C_R (µF)	ø D (mm)	L (mm)	I_{LEAK} (µA, 2min)	tanδ +20°C ▪ 120Hz (%)	Max. ESR +20°C ▪ 100kHz (mΩ)	I_R ▪ Max. Ripple Current +105°C ▪ 100kHz (mA rms)	CapXon Part Number
2.5	82	5	5.8	300	8	30	2100	PM820M2R5C058PTR
	100	6.3	5.8	300	8	22	2500	PM101M2R5E058PTR
	150	6.3	5.8	300	8	22	2500	PM151M2R5E058PTR
	180	5	5.8	300	8	25	2310	PM181M2R5C058PTR
	180	6.3	5.8	300	8	22	2500	PM181M2R5E058PTR
	220	5	5.8	300	8	25	2310	PM221M2R5C058PTR
	220	6.3	5.8	300	8	22	2800	PM221M2R5E058PTR
	270	5	5.8	300	8	22	2610	PM271M2R5C058PTR
	270	6.3	5.8	300	8	22	2800	PM271M2R5E058PTR
	330	6.3	5.8	300	8	15	3100	PM331M2R5E058PTRZ
	390	6.3	5.8	300	8	25	2610	PM391M2R5E058PTR
	390	6.3	5.8	300	8	15	3100	PM391M2R5E058PTRZ
	470	6.3	5.8	300	8	20	2800	PM471M2R5E058PTR
	470	6.3	7.7	300	8	15	3600	PM471M2R5E077PTR
	560	6.3	5.8	300	8	15	3100	PM561M2R5E058PTRZ
	560	6.3	7.7	300	8	15	3600	PM561M2R5E077PTR
4	47	5	5.8	300	8	25	2310	PM470M004C058PTR
	56	5	5.8	300	8	25	2310	PM560M004C058PTR
	68	5	5.8	300	8	25	2310	PM680M004C058PTR
	100	5	5.8	300	8	25	2310	PM101M004C058PTR
	100	6.3	5.8	300	8	22	2500	PM101M004E058PTR
	120	5	5.8	300	8	22	2500	PM121M004C058PTR
	120	6.3	5.8	300	8	22	2500	PM121M004E058PTR
	150	5	5.8	300	8	22	2500	PM151M004C058PTR
	150	6.3	5.8	300	8	22	2500	PM151M004E058PTR
	150	6.3	7.7	300	8	20	3100	PM151M004E077PTR
	180	6.3	5.8	300	8	22	2500	PM181M004E058PTR
	220	5	5.8	300	8	22	2610	PM221M004C058PTR
	220	6.3	5.8	300	8	22	2800	PM221M004E058PTR
	220	6.3	7.7	300	8	20	3100	PM221M004E077PTR
	270	6.3	5.8	300	8	22	2800	PM271M004E058PTR
	270	6.3	7.7	300	8	20	3100	PM271M004E077PTR
	330	6.3	5.8	300	8	20	2800	PM331M004E058PTR
	330	6.3	5.8	300	8	15	3100	PM331M004E058PTRZ
	330	6.3	7.7	300	8	15	3600	PM331M004E077PTR
	390	6.3	5.8	300	8	20	2800	PM391M004E058PTR
	390	6.3	7.7	300	8	15	3600	PM391M004E077PTR
	470	6.3	7.7	300	8	15	3600	PM471M004E077PTR
6.3	47	5	5.5	300	8	30	2000	PM470M6R3C055PTR
	56	5	5.5	300	8	30	2000	PM560M6R3C055PTR
	68	5	5.5	300	8	30	2000	PM680M6R3C055PTR
	68	6.3	5.8	300	8	22	2690	PM680M6R3E058PTR

For further information please contact sales@capxon.org

STANDARD RATINGS

Part number shows blister tape on paper reel

V_R (V)	C_R (µF)	ø D (mm)	L (mm)	I_{LEAK} (µA, 2min)	tanδ +20°C ▪ 120Hz (%)	Max. ESR +20°C ▪ 100kHz (mΩ)	I_R ▪ Max. Ripple Current +105°C ▪ 100kHz (mA rms)	CapXon Part Number
6.3	82	5	5.5	300	8	30	2000	PM820M6R3C055PTR
	82	6.3	5.8	300	8	22	2690	PM820M6R3E058PTR
	100	5	5.5	300	8	30	2000	PM101M6R3C055PTR
	100	5	5.8	300	8	25	2310	PM101M6R3C058PTR
	100	6.3	5.8	300	8	22	2800	PM101M6R3E058PTR
	120	5	5.8	300	8	25	2310	PM121M6R3C058PTR
	120	6.3	5.8	300	8	22	2800	PM121M6R3E058PTR
	150	5	5.8	300	8	22	2610	PM151M6R3C058PTR
	150	6.3	5.8	300	8	22	2800	PM151M6R3E058PTR
	150	6.3	7.7	300	8	20	3100	PM151M6R3E077PTR
	180	5	5.8	300	8	22	2610	PM181M6R3C058PTR
	180	6.3	5.8	300	8	22	2800	PM181M6R3E058PTR
	180	6.3	7.7	300	8	20	3100	PM181M6R3E077PTR
	220	6.3	5.8	300	8	20	3000	PM221M6R3E058PTR
	220	6.3	5.8	300	8	15	3100	PM221M6R3E058PTRZ
	220	6.3	7.7	300	8	15	3600	PM221M6R3E077PTR
	270	6.3	5.8	300	8	20	3000	PM271M6R3E058PTR
	270	6.3	7.7	300	8	15	3600	PM271M6R3E077PTR
	330	6.3	5.8	300	8	20	3100	PM331M6R3E058PTR
	330	6.3	7.7	300	8	15	3600	PM331M6R3E077PTR
	330	6.3	7.7	300	8	10	4200	PM331M6R3E077PTRZ
	390	6.3	7.7	300	8	15	3600	PM391M6R3E077PTR
10	4.7	4	5.5	300	8	120	980	PM4R7M010B055PTR
	6.8	4	5.5	300	8	120	980	PM6R8M010B055PTR
	10	4	5.5	300	8	80	1200	PM100M010B055PTR
	15	4	5.5	300	8	80	1200	PM150M010B055PTR
	22	4	5.5	300	8	80	1200	PM220M010B055PTR
	33	5	5.5	300	8	30	2000	PM330M010C055PTR
	33	6.3	5.8	300	8	30	2200	PM330M010E058PTR
	39	5	5.5	300	8	30	2000	PM390M010C055PTR
	39	6.3	5.8	300	8	30	2200	PM390M010E058PTR
	47	5	5.5	300	8	30	2000	PM470M010C055PTR
	47	6.3	5.8	300	8	30	2200	PM470M010E058PTR
	47	6.3	7.7	300	8	20	2800	PM470M010E077PTR
	56	5	5.5	300	8	30	2000	PM560M010C055PTR
	56	6.3	5.8	300	8	30	2200	PM560M010E058PTR
	56	6.3	7.7	300	8	20	2800	PM560M010E077PTR
	68	5	5.5	300	8	30	2000	PM680M010C055PTR
	68	6.3	5.8	300	8	30	2200	PM680M010E058PTR
	68	6.3	7.7	300	8	20	2800	PM680M010E077PTR
	82	5	5.5	300	8	30	2000	PM820M010C055PTR
	82	6.3	5.8	300	8	30	2200	PM820M010E058PTR

For further information please contact sales@capxon.org

STANDARD RATINGS

Part number shows blister tape on paper reel

V_R (V)	C_R (µF)	ø D (mm)	L (mm)	I_{LEAK} (µA, 2min)	tanδ +20°C ▪ 120Hz (%)	Max. ESR +20°C ▪ 100kHz (mΩ)	I_R ▪ Max. Ripple Current +105°C ▪ 100kHz (mA rms)	CapXon Part Number
10	82	6.3	7.7	300	8	20	2800	PM820M010E077PTR
	100	5	5.5	300	8	30	2000	PM101M010C055PTR
	100	6.3	5.8	300	8	30	2200	PM101M010E058PTR
	100	6.3	7.7	300	8	20	2800	PM101M010E077PTR
	120	6.3	5.8	300	8	25	2610	PM121M010E058PTR
	150	6.3	5.8	300	8	25	2610	PM151M010E058PTR
	150	6.3	7.7	300	8	20	3100	PM151M010E077PTR
	180	6.3	5.8	300	8	25	2610	PM181M010E058PTR
	180	6.3	7.7	300	8	20	3100	PM181M010E077PTR
	220	6.3	5.8	300	8	25	2610	PM221M010E058PTR
	220	6.3	7.7	300	8	20	3100	PM221M010E077PTR
	270	6.3	7.7	300	8	20	3100	PM271M010E077PTR
	330	6.3	7.7	300	8	20	3100	PM331M010E077PTR
16	10	5	5.8	400	8	40	2000	PM100M016C058PTR
	10	6.3	5.8	400	8	35	2200	PM100M016E058PTR
	10	6.3	7.7	400	8	30	2610	PM100M016E077PTR
	15	5	5.8	400	8	40	2000	PM150M016C058PTR
	15	6.3	5.8	400	8	35	2200	PM150M016E058PTR
	15	6.3	7.7	400	8	30	2610	PM150M016E077PTR
	22	5	5.8	400	8	40	2000	PM220M016C058PTR
	22	6.3	5.8	400	8	35	2200	PM220M016E058PTR
	22	6.3	7.7	400	8	30	2610	PM220M016E077PTR
	33	5	5.8	400	8	40	2000	PM330M016C058PTR
	33	6.3	5.8	400	8	35	2200	PM330M016E058PTR
	33	6.3	7.7	400	8	30	2610	PM330M016E077PTR
	39	5	5.8	400	8	40	2000	PM390M016C058PTR
	39	6.3	5.8	400	8	35	2200	PM390M016E058PTR
	39	6.3	7.7	400	8	30	2610	PM390M016E077PTR
	47	5	5.8	400	8	40	2000	PM470M016C058PTR
	47	6.3	5.8	400	8	35	2200	PM470M016E058PTR
	47	6.3	7.7	400	8	30	2610	PM470M016E077PTR
	56	5	5.8	400	8	40	2000	PM560M016C058PTR
	56	6.3	5.8	400	8	35	2200	PM560M016E058PTR
	56	6.3	7.7	400	8	30	2610	PM560M016E077PTR
	68	6.3	5.8	400	8	35	2200	PM680M016E058PTR
	68	6.3	7.7	400	8	25	2690	PM680M016E077PTR
	82	6.3	5.8	400	8	35	2200	PM820M016E058PTR
	82	6.3	7.7	400	8	25	2690	PM820M016E077PTR
	100	6.3	5.8	400	8	30	2490	PM101M016E058PTR
	100	6.3	7.7	400	8	25	2690	PM101M016E077PTR
	150	6.3	7.7	400	8	25	2690	PM151M016E077PTR
	180	6.3	5.8	400	12	25	3200	PM181M016E058PTR

STANDARD RATINGS

Part number shows blister tape on paper reel

V_R (V)	C_R (µF)	ø D (mm)	L (mm)	I_{LEAK} (µA, 2min)	tanδ +20°C ▪ 120Hz (%)	Max. ESR +20°C ▪ 100kHz (mΩ)	I_R ▪ Max. Ripple Current +105°C ▪ 100kHz (mA rms)	CapXon Part Number
20	10	5	5.8	600	8	40	2000	PM100M020C058PTR
	10	6.3	5.8	600	8	40	2200	PM100M020E058PTR
	15	6.3	5.8	600	8	35	2200	PM150M020E058PTR
	22	6.3	5.8	600	8	35	2200	PM220M020E058PTR
	22	6.3	7.7	600	8	30	2670	PM220M020E077PTR
	27	6.3	5.8	600	8	35	2200	PM270M020E058PTR
	33	6.3	5.8	600	8	35	2200	PM330M020E058PTR
	33	6.3	7.7	600	8	30	2670	PM330M020E077PTR
	39	6.3	7.7	600	8	30	2670	PM390M020E077PTR
	47	6.3	5.8	600	8	35	2200	PM470M020E058PTR
	47	6.3	7.7	600	8	30	2670	PM470M020E077PTR
	56	6.3	5.8	600	8	35	2200	PM560M020E058PTR
	56	6.3	7.7	600	8	30	2670	PM560M020E077PTR
	120	6.3	5.8	600	12	25	3200	PM121M020E058PTR
25	6.8	6.3	5.8	600	8	40	2000	PM6R8M025E058PTR
	10	6.3	5.8	600	8	35	2200	PM100M025E058PTR
	10	6.3	7.7	600	8	35	2670	PM100M025E077PTR
	15	6.3	5.8	600	8	35	2200	PM150M025E058PTR
	15	6.3	7.7	600	8	30	2670	PM150M025E077PTR
	22	6.3	5.8	600	8	35	2200	PM220M025E058PTR
	22	6.3	7.7	600	8	30	2670	PM220M025E077PTR
	33	6.3	5.8	600	8	35	2200	PM330M025E058PTR
	33	6.3	7.7	600	8	30	2670	PM330M025E077PTR
	39	6.3	7.7	600	8	30	2670	PM390M025E077PTR
	47	6.3	5.8	600	8	35	2200	PM470M025E058PTR
35	18	6.3	5.8	600	12	64	900	PM180M035E058PTR
	22	6.3	5.8	600	12	50	1300	PM220M035E058PTR
	27	6.3	5.8	600	12	50	1530	PM270M035E058PTR
	47	6.3	7.7	600	12	50	1600	PM470M035E077PTR
	56	6.3	7.7	600	12	35	2100	PM560M035E077PTR
50	8,2	6.3	5.8	600	12	80	800	PM8R2M050E058PTR
	12	6.3	5.8	600	12	80	800	PM120M050E058PTR
	15	6.3	5.8	600	12	80	800	PM150M050E058PTR
63	5.6	6.3	5.8	600	12	100	700	PM5R6M063E058PTR
	8.2	6.3	5.8	600	12	100	700	PM8R2M063E058PTR
100	4.7	6.3	7.7	600	12	100	1060	PM4R7M100E077PTR

For further information please contact sales@capxon.org

MULTIPLIER K_f for RIPPLE CURRENT vs. FREQUENCY

Frequency (Hz)	120 ≤ Freq. < 1k	1k ≤ Freq. < 10k	10k ≤ Freq. < 100k	100k ≤ Freq. < 300k
Coefficient K_f	0.05	0.3	0.7	1

PRECAUTIONS, GUIDELINES AND PACKAGING INFORMATON

Unless otherwise agreed in individual specifications, all products are subject to our “General Precautions and Guidelines” as well as our “Packaging Information”. Please refer to the following links in the table.

General Precautions and Guidelines	Packaging Information Polymer SMD
Page 837	Page 727

DISCLAIMER

All product related data (e.g. specification, statements and general information) are subject to change without any notice. It is necessary that the customer observes all product related technical / application information and handling instructions.

CapXon products are designed and manufactured according to severe quality and safety standards. Under no circumstance, CapXon warrants that any CapXon product is suitable for the purposes intended for your application, even CapXon knows the application. It is customer's duty and obligation to check and make sure that CapXon products are suitable for the purposes intended and select the correct and proper CapXon product. Customers are requested to perform a sufficient validation and reliability evaluation to assure needed safety level and reliability performance by suitable designs and to apply proper safeguards (e.g. redundancies, protective circuits).

Particular operating conditions (ambient temperature, ripple current, voltage, thermal resistance, etc.) as well as storage, production or assembly may affect the performance and the lifetime of the capacitor. Please consult CapXon for lifetime estimation, failure mode considerations or worst-case scenarios according to the product technology, product tolerances / deviations or change of the characteristics of the capacitor due to shipment, storage, handling, production and usage.

For aerospace or military application, life-saving, life-sustaining, safety critical applications or any application where failure may cause severe personal injury or death, please consult us before design-in the capacitor in your application.

Except for the written expressed warranties, CapXon does not impliedly, by assumption or whatever else, warrant, undertake, promise any other warranty or guaranty for any CapXon product.

For further information, please visit our website www.capxongroup.com or contact CapXon directly.

PV SERIES ▪ LOW PROFILE TYPE



KEY FEATURES

MINIATURIZED

- **SOLID CONDUCTIVE POLYMER** ▪ SMD type
- Low profile and high capacitance for space critical applications
- Endurance: 105°C ▪ 2000 hours
- Large permissible ripple current
- No dry-out effect guarantees extremely long life

HF Halogen Free · MSL 1 · RoHS & REACH COMPLIANT

SPECIFICATIONS

Items		Performance Characteristics
Operating Temperature Range		-55 ~ +105°C
Rated Voltage Range	V_R	2.5 ~ 100V DC
Surge Voltage	V_S	($V_R \le 20V$): $V_S = 1.15 \cdot V_R$ ($V_R \ge 25V$): $V_S = 1.10 \cdot V_R$
Capacitance Range	C_R	6.8 ~ 2500µF
Cap. Tolerance	ΔC	±20% (120Hz ▪ 20°C)
Leakage Current (20°C ▪ V_R applied)	I_{LEAK}	Not to exceed the values shown in standard ratings After 2 minutes
Dissipation Factor % (20°C ▪ 120Hz)	tanδ	Not to exceed the values shown in standard ratings
Equivalent Series Resistance (20°C ▪ 100kHz)	ESR	Not to exceed the values shown in standard ratings

Lifetime Test		
Endurance 105°C (V_R applied)	Test	**2000 hours**
	$\triangle C/C_R$	Within ±20% of the initial value
	tanδ	Not to exceed 150% of the value specified
	ESR	Not to exceed 150% of the value specified
	I_{Leak}	Less than the specified value
Moisture Resistance stored at 60°C (RH 90 ~ 95%)	Test	**1000 hours**
	$\triangle C/C_R$	Within ±20% of the initial value
	tanδ	Not to exceed 150% of the value specified
	ESR	Not to exceed 150% of the value specified
	I_{Leak}	Less than the specified value

DIMENSIONS STANDARD PACKAGE ▪ All dimensions in mm

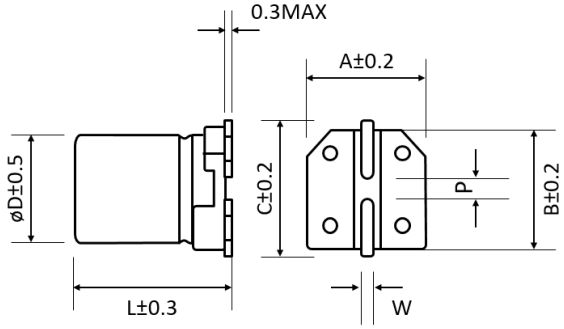

ø D	L	A	B	C	W	P±0.2
8	7.7	8.3	8.3	9	0.7 to 1.1	3.1
8	8.7	8.3	8.3	9	0.7 to 1.1	3.1
8	10.5	8.3	8.3	9	0.7 to 1.1	3.1
10	8.7	10.3	10.3	11	0.7 to 1.1	4.5
10	10.5	10.3	10.3	11	0.7 to 1.1	4.5

For further information please contact sales@capxon.com.org

STANDARD RATINGS

Part number shows blister tape on paper reel

V_R (V)	C_R (µF)	ø D (mm)	L (mm)	I_{LEAK} (µA, 2min)	tanδ +20°C ▪ 120Hz (%)	Max. ESR +20°C ▪ 100kHz (mΩ)	I_R ▪ Max. Ripple Current +105°C ▪ 100kHz (mA rms)	CapXon Part Number
2.5	560	8	7.7	280	8	20	3500	PV561M2R5F077PTR
	680	8	7.7	340	8	20	3500	PV681M2R5F077PTR
	820	8	7.7	410	8	20	3500	PV821M2R5F077PTR
	1000	8	8.7	500	8	11	4800	PV102M2R5F087PTR
	1200	10	8.7	600	8	20	3700	PV122M2R5G087PTR
	1500	10	8.7	750	10	20	3700	PV152M2R5G087PTR
	2200	10	10.5	1100	10	11	5500	PV222M2R5G105PTR
	2500	10	10.5	1250	10	11	5500	PV252M2R5G105PTR
4	330	8	7.7	264	8	20	3500	PV331M004F077PTR
	390	8	8.7	312	8	15	4200	PV391M004F087PTR
	470	8	8.7	376	8	15	4200	PV471M004F087PTR
	560	8	7.7	448	8	20	3500	PV561M004F077PTR
	560	8	8.7	448	8	11	4800	PV561M004F087PTR
	680	8	7.7	544	8	20	3500	PV681M004F077PTR
	680	8	8.7	544	8	11	4800	PV681M004F087PTR
	820	8	8.7	656	8	11	4800	PV821M004F087PTR
	820	10	10.5	656	8	11	5100	PV821M004G105PTR
	1000	8	10.5	800	10	11	5100	PV102M004F105PTR
	1200	10	10.5	960	10	11	5500	PV122M004G105PTR
	1500	10	10.5	1200	10	11	5500	PV152M004G105PTR
	2000	10	10.5	1600	10	11	5500	PV202M004G105PTR
6.3	220	8	7.7	277	8	20	3500	PV221M6R3F077PTR
	270	8	7.7	340	8	20	3500	PV271M6R3F077PTR
	330	8	7.7	416	8	20	3500	PV331M6R3F077PTR
	390	8	7.7	491	8	20	3500	PV391M6R3F077PTR
	470	8	7.7	592	8	20	3500	PV471M6R3F077PTR
	470	8	8.7	592	8	11	4800	PV471M6R3F087PTR
	680	8	8.7	856	10	11	4800	PV681M6R3F087PTR
	820	10	8.7	1033	10	20	3700	PV821M6R3G087PTR
	1000	10	8.7	1260	10	20	3700	PV102M6R3G087PTR
	1200	10	10.5	1512	10	11	5500	PV122M6R3G105PTR
	1500	10	10.5	1890	10	11	5500	PV152M6R3G105PTR
10	330	8	7.7	660	8	20	3500	PV331M010F077PTR
	390	8	7.7	780	8	20	3500	PV391M010F077PTR
	470	8	8.7	940	8	11	4800	PV471M010F087PTR
	560	10	8.7	1120	8	20	3700	PV561M010G087PTR
	560	10	10.5	1120	8	11	4800	PV561M010G105PTR
	680	10	8.7	1360	10	20	3700	PV681M010G087PTR
	680	10	10.5	1360	10	11	4800	PV681M010G105PTR
	820	10	10.5	1640	10	11	5100	PV821M010G105PTR
16	68	8	7.7	218	8	25	3300	PV680M016F077PTR
	150	8	7.7	480	8	25	3300	PV151M016F077PTR

For further information please contact sales@capxon.com.org

STANDARD RATINGS

Part number shows blister tape on paper reel

V_R (V)	C_R (µF)	ø D (mm)	L (mm)	I_{LEAK} (µA, 2min)	tanδ +20°C ▪ 120Hz (%)	Max. ESR +20°C ▪ 100kHz (mΩ)	I_R ▪ Max. Ripple Current +105°C ▪ 100kHz (mA rms)	CapXon Part Number
16	180	8	7.7	576	8	23	3500	PV181M016F077PTR
	180	8	8.7	576	8	16	4800	PV181M016F087PTR
	220	8	7.7	704	8	23	3500	PV221M016F077PTR
	220	8	8.7	704	8	16	4800	PV221M016F087PTR
	270	8	8.7	864	10	16	4800	PV271M016F087PTR
	270	10	10.5	864	10	16	5100	PV271M016G105PTR
	330	10	8.7	1056	10	23	3700	PV331M016G087PTR
	330	10	10.5	1056	10	16	5100	PV331M016G105PTR
	390	10	8.7	1248	10	23	3700	PV391M016G087PTR
	390	10	10.5	1248	10	16	5100	PV391M016G105PTR
	470	10	10.5	1504	10	16	5100	PV471M016G105PTR
20	27	8	8.7	400	10	25	3300	PV270M020F087PTR
	68	8	8.7	272	10	22	3500	PV680M020F087PTR
	82	8	8.7	328	10	22	3500	PV820M020F087PTR
	100	8	8.7	400	10	22	3500	PV101M020F087PTR
	120	10	8.7	480	10	30	2800	PV121M020G087PTR
	150	8	8.7	600	10	22	3500	PV151M020F087PTR
	150	10	8.7	600	10	27	3100	PV151M020G087PTR
	180	10	8.7	720	10	27	3100	PV181M020G087PTR
	180	10	10.5	720	10	22	3700	PV181M020G105PTR
	220	10	8.7	880	10	27	3100	PV221M020G087PTR
	220	10	10.5	880	10	22	3700	PV221M020G105PTR
	270	10	10.5	1080	10	22	3700	PV271M020G105PTR
	330	10	10.5	1320	10	22	3700	PV331M020G105PTR
25	47	10	8.7	400	10	30	2800	PV470M025G087PTR
	68	8	8.7	340	10	22	3500	PV680M025F087PTR
	82	8	8.7	410	10	22	3500	PV820M025F087PTR
	82	10	8.7	410	10	27	3100	PV820M025G087PTR
	100	8	8.7	500	10	22	3500	PV101M025F087PTR
	100	10	8.7	500	10	27	3100	PV101M025G087PTR
	120	8	8.7	600	10	22	3500	PV121M025F087PTR
	150	8	8.7	750	10	25	3300	PV151M025F087PTR
	180	10	10.5	900	10	22	3700	PV181M025G105PTR
	270	10	10.5	1350	10	25	3500	PV271M025G105PTR
35	56	8	7.7	392	12	40	2200	PV560M035F077PTR
	68	8	7.7	476	12	35	2400	PV680M035F077PTR
	82	8	8.7	574	12	35	2600	PV820M035F087PTR
	100	8	8.7	700	12	30	3000	PV101M035F087PTR
	100	10	10.5	700	12	30	3200	PV101M035G105PTR
	120	10	10.5	840	12	30	3200	PV121M035G105PTR
	150	10	10.5	1050	12	30	3200	PV151M035G105PTR

For further information please contact sales@capxon.com.org

STANDARD RATINGS

Part number shows blister tape on paper reel

V_R (V)	C_R (µF)	ø D (mm)	L (mm)	I_{LEAK} (µA, 2min)	tanδ +20°C ▪ 120Hz (%)	Max. ESR +20°C ▪ 100kHz (mΩ)	I_R ▪ Max. Ripple Current +105°C ▪ 100kHz (mA rms)	CapXon Part Number
50	10	8	8.7	100	12	45	1500	PV100M050F087PTR
	33	8	8.7	330	12	40	1900	PV330M050F087PTR
	47	8	10.5	470	12	35	2200	PV470M050F105PTR
	47	10	10.5	470	12	35	2500	PV470M050G105PTR
	68	10	10.5	680	12	35	2600	PV680M050G105PTR
63	10	8	8.7	126	12	45	1500	PV100M063F087PTR
	22	8	8.7	277	12	40	1700	PV220M063F087PTR
	27	8	8.7	340	12	40	1900	PV270M063F087PTR
	33	8	8.7	416	12	40	1900	PV330M063F087PTR
	33	10	10.5	416	12	35	2200	PV330M063G105PTR
	47	10	10.5	592	12	35	2200	PV470M063G105PTR
80	10	8	8.7	160	12	45	1600	PV100M080F087PTR
	15	10	10.5	240	12	40	1900	PV150M080G105PTR
100	6.8	8	8.7	136	12	48	1500	PV6R8M100F087PTR
	12	10	10.5	240	12	45	1900	PV120M100G105PTR
	15	8	8.7	300	12	48	1500	PV150M100F087PTR

MULTIPLIER K_f FOR RIPPLE CURRENT VS. FREQUENCY

Frequency (Hz)	120 ≤ Freq. < 1k	1k ≤ Freq. < 10k	10k ≤ Freq. < 100k	100k ≤ Freq. < 300k
Coefficient K_f	0.05	0.3	0.7	1

PRECAUTIONS, GUIDELINES AND PACKAGING INFORMATON

Unless otherwise agreed in individual specifications, all products are subject to our “General Precautions and Guidelines” as well as our “Packaging Information”. Please refer to the following links in the table.

General Precautions and Guidelines	Packaging Information Polymer SMD
Page 837	Page 727

For further information please contact sales@capxon.com.org

DISCLAIMER

All product related data (e.g. specification, statements and general information) are subject to change without any notice. It is necessary that the customer observes all product related technical / application information and handling instructions.

CapXon products are designed and manufactured according to severe quality and safety standards. Under no circumstance, CapXon warrants that any CapXon product is suitable for the purposes intended for your application, even CapXon knows the application. It is customer's duty and obligation to check and make sure that CapXon products are suitable for the purposes intended and select the correct and proper CapXon product. Customers are requested to perform a sufficient validation and reliability evaluation to assure needed safety level and reliability performance by suitable designs and to apply proper safeguards (e.g. redundancies, protective circuits).

Particular operating conditions (ambient temperature, ripple current, voltage, thermal resistance, etc.) as well as storage, production or assembly may affect the performance and the lifetime of the capacitor. Please consult CapXon for lifetime estimation, failure mode considerations or worst-case scenarios according to the product technology, product tolerances / deviations or change of the characteristics of the capacitor due to shipment, storage, handling, production and usage.

For aerospace or military application, life-saving, life-sustaining, safety critical applications or any application where failure may cause severe personal injury or death, please consult us before design-in the capacitor in your application.

Except for the written expressed warranties, CapXon does not impliedly, by assumption or whatever else, warrant, undertake, promise any other warranty or guaranty for any CapXon product.

For further information, please visit our website www.capxongroup.com or contact CapXon directly.

PR SERIES ▪ ULTRA LONG LIFE TYPE ▪ 5000 HOURS



KEY FEATURES

LONG LIFE

- **SOLID CONDUCTIVE POLYMER** ▪ SMD type
- Ultra-low ESR at high frequency range
- Endurance: 105°C ▪ 5000 hours
- Large permissible ripple current
- No dry-out effect guarantees extremely long life

HF Halogen Free · MSL 1 · RoHS & REACH COMPLIANT

SPECIFICATIONS

Items		Performance Characteristics
Operating Temperature Range		-55 ~ +105°C
Rated Voltage Range	V_R	6.3 ~ 50V DC
Surge Voltage	V_S	($V_R \le 20V$): $V_S = 1.15 \cdot V_R$ ($V_R \ge 25V$): $V_S = 1.10 \cdot V_R$
Capacitance Range	C_R	10 ~ 1500µF
Cap. Tolerance	ΔC	±20% (120Hz ▪ 20°C)
Leakage Current (20°C ▪ V_R applied)	I_{LEAK}	Not to exceed the values shown in standard ratings After 2 minutes
Dissipation Factor % (20°C ▪ 120Hz)	tanδ	Not to exceed the values shown in standard ratings
Equivalent Series Resistance (20°C ▪ 100kHz)	ESR	Not to exceed the values shown in standard ratings

Lifetime Test		
Endurance 105°C (V_R applied)	Test	**5000 hours**
	△C/C_R	Within ±20% of the initial value
	tanδ	Not to exceed 150% of the value specified
	ESR	Not to exceed 150% of the value specified
	I_{Leak}	Less than the specified value
Moisture Resistance stored at 60°C (RH 90 ~ 95%)	Test	**1000 hours**
	△C/C_R	Within ±20% of the initial value
	tanδ	Not to exceed 150% of the value specified
	ESR	Not to exceed 150% of the value specified
	I_{Leak}	Less than the specified value

DIMENSIONS STANDARD PACKAGE ▪ All dimensions in mm

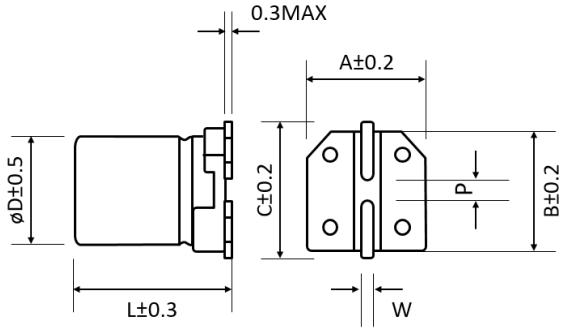

ø D	L	A	B	C	W	P±0.2
6.3	5.8	6.6	6.6	7.2	0.5 to 0.8	2.2
6.3	7.7	6.6	6.6	7.2	0.5 to 0.8	2.2
8	7.7	8.3	8.3	9	0.7 to 1.1	3.1
8	8.7	8.3	8.3	9	0.7 to 1.1	3.1
8	10.5	8.3	8.3	9	0.7 to 1.1	3.1
8	11.7	8.3	8.3	9	0.7 to 1.1	3.1
10	10.5	10.3	10.3	11	0.7 to 1.1	4.5
10	12.4	10.3	10.3	11	0.7 to 1.1	4.5

For further information please contact sales@capxon.org

STANDARD RATINGS

Part number shows blister tape on paper reel

V_R (V)	C_R (µF)	ø D (mm)	L (mm)	I_{LEAK} (µA, 2min)	tanδ +20°C ▪ 120Hz (%)	Max. ESR +20°C ▪ 100kHz (mΩ)	I_R ▪ Max. Ripple Current +105°C ▪ 100kHz (mA rms)	CapXon Part Number
6.3	100	6.3	5.8	300	8	32	2300	PR101M6R3E058PTR
	220	6.3	5.8	300	8	32	2300	PR221M6R3E058PTR
	220	6.3	5.8	300	8	20	2800	PR221M6R3E058PTRZ
	270	6.3	7.7	340	8	22	3000	PR271M6R3E077PTR
	470	8	7.7	592	8	22	3700	PR471M6R3F077PTR
	820	8	11.7	1033	8	12	5000	PR821M6R3F117PTR
	1000	10	10.5	1260	8	15	4700	PR102M6R3G105PTR
	1500	10	12.4	1890	8	12	5300	PR152M6R3G124PTR
10	56	6.3	5.8	300	8	32	2300	PR560M010E058PTR
	120	6.3	7.7	300	8	22	2900	PR121M010E077PTR
	150	6.3	7.7	300	8	22	2900	PR151M010E077PTR
	180	6.3	7.7	360	8	22	2900	PR181M010E077PTR
	270	8	7.7	540	8	22	3200	PR271M010F077PTR
	330	10	8.7	660	8	22	3700	PR331M010G087PTR
	470	8	11.7	940	8	12	4500	PR471M010F117PTR
	560	10	10.5	1120	8	15	4200	PR561M010G105PTR
	820	10	12.4	1640	8	12	4800	PR821M010G124PTR
	1000	10	12.4	2000	8	12	4800	PR102M010G124PTR
16	47	6.3	5.8	400	10	48	1700	PR470M016E058PTR
	82	6.3	7.7	400	10	28	2400	PR820M016E077PTR
	100	6.3	7.7	400	10	28	2400	PR101M016E077PTR
	120	6.3	7.7	400	12	28	2400	PR121M016E077PTR
	120	8	7.7	400	12	28	3000	PR121M016F077PTR
	150	8	8.7	480	12	26	3100	PR151M016F087PTR
	150	10	8.7	480	12	33	3100	PR151M016G087PTR
	180	8	11.7	576	12	18	4200	PR181M016F117PTR
	180	10	8.7	576	12	33	3100	PR181M016G087PTR
	220	8	11.7	704	12	18	4200	PR221M016F117PTR
	270	10	10.5	864	12	23	3800	PR271M016G105PTR
	330	10	10.5	1056	12	23	3800	PR331M016G105PTR
	390	10	12.4	1248	12	18	4500	PR391M016G124PTR
	560	10	12.4	1792	12	18	4500	PR561M016G124PTR
	680	10	12.4	2176	12	18	4500	PR681M016G124PTR
20	22	6.3	5.8	600	10	48	1700	PR220M020E058PTR
	33	6.3	5.8	600	10	48	1700	PR330M020E058PTR
	47	6.3	7.7	600	10	33	2300	PR470M020E077PTR
	56	6.3	7.7	600	10	33	2300	PR560M020E077PTR
	68	6.3	7.7	600	10	33	2300	PR680M020E077PTR
	82	8	7.7	600	12	33	2900	PR820M020F077PTR
	120	8	7.7	600	12	33	2900	PR121M020F077PTR
	150	8	11.7	600	12	23	4000	PR151M020F117PTR
	180	8	11.7	720	12	23	4000	PR181M020F117PTR
	180	10	10.5	720	12	25	3650	PR181M020G105PTR
	220	10	10.5	880	12	25	3650	PR221M020G105PTR
	330	10	12.4	1320	12	23	4200	PR331M020G124PTR

For further information please contact sales@capxon.org

STANDARD RATINGS

Part number shows blister tape on paper reel

V_R (V)	C_R (µF)	ø D (mm)	L (mm)	I_{LEAK} (µA, 2min)	tanδ +20°C ▪ 120Hz (%)	Max. ESR +20°C ▪ 100kHz (mΩ)	I_R ▪ Max. Ripple Current +105°C ▪ 100kHz (mA rms)	CapXon Part Number
25	10	6.3	5.8	600	10	58	1600	PR100M025E058PTR
	22	6.3	5.8	600	10	58	1600	PR220M025E058PTR
	39	6.3	7.7	600	10	33	2300	PR390M025E077PTR
	47	6.3	7.7	600	10	33	2300	PR470M025E077PTR
	47	8	11.7	600	12	23	3700	PR470M025F117PTR
	56	8	7.7	600	12	33	2900	PR560M025F077PTR
	68	8	7.7	600	12	33	2900	PR680M025F077PTR
	68	8	11.7	600	12	23	4000	PR680M025F117PTR
	82	8	8.7	600	12	27	3200	PR820M025F087PTR
	82	8	11.7	600	12	23	4000	PR820M025F117PTR
	82	10	8.7	600	12	33	2900	PR820M025G087PTR
	100	6.3	7.7	600	12	40	2000	PR101M025E077PTR
	100	8	8.7	600	12	27	3200	PR101M025F087PTR
	120	8	11.7	600	12	23	4000	PR121M025F117PTR
	120	10	10.5	600	12	25	3650	PR121M025G105PTR
	150	10	12.4	750	12	23	4200	PR151M025G124PTR
	180	10	12.4	900	12	23	4200	PR181M025G124PTR
	220	8	11.7	1100	12	23	4000	PR221M025F117PTR
	220	10	12.4	1100	12	23	4200	PR221M025G124PTR
35	10	6.3	5.8	600	12	75	980	PR100M035E058PTR
	18	6.3	7.7	600	12	60	1400	PR180M035E077PTR
	22	8	11.7	600	12	35	2300	PR220M035F117PTR
	27	6.3	7.7	600	12	60	1400	PR270M035E077PTR
	33	8	11.7	600	12	35	2300	PR330M035F117PTR
	39	8	8.7	600	12	40	1800	PR390M035F087PTR
	56	8	11.7	600	12	35	2300	PR560M035F117PTR
	68	10	10.5	600	12	32	2500	PR680M035G105PTR
	100	10	10.5	700	12	32	2500	PR101M035G105PTR
	100	10	12.4	700	12	30	3100	PR101M035G124PTR
	150	10	10.5	700	12	32	2500	PR151M035G105PTR
	150	10	12.4	700	12	30	3100	PR151M035G124PTR
50	10	8	7.7	100	12	75	1400	PR100M050F077PTR
	12	6.3	7.7	120	12	75	1400	PR120M050E077PTR
	22	8	8.7	220	12	50	1800	PR220M050F087PTR
	22	8	11.7	220	12	40	2400	PR220M050F117PTR
	22	10	8.7	220	12	55	1800	PR220M050G087PTR
	27	8	11.7	270	12	40	2400	PR270M050F117PTR
	33	10	10.5	330	12	42	2200	PR330M050G105PTR
	33	10	12.4	330	12	30	3000	PR330M050G124PTR
	47	10	12.4	470	12	30	3000	PR470M050G124PTR
	56	10	12.4	560	12	30	3000	PR560M050G124PTR
	68	10	12.4	680	12	30	3000	PR680M050G124PTR
	100	10	12.4	1000	12	26	3650	PR101M050G124PTR

For further information please contact sales@capxon.org

MULTIPLIER K_f for RIPPLE CURRENT vs. FREQUENCY

Frequency (Hz)	120 ≤ Freq. < 1k	1k ≤ Freq. < 10k	10k ≤ Freq. < 100k	100k ≤ Freq. < 300k
Coefficient K_f	0.05	0.3	0.7	1

PRECAUTIONS, GUIDELINES AND PACKAGING INFORMATON

Unless otherwise agreed in individual specifications, all products are subject to our “General Precautions and Guidelines” as well as our “Packaging Information”. Please refer to the following links in the table.

General Precautions and Guidelines	Packaging Information Polymer SMD
Page 837	Page 727

DISCLAIMER

All product related data (e.g. specification, statements and general information) are subject to change without any notice. It is necessary that the customer observes all product related technical / application information and handling instructions.

CapXon products are designed and manufactured according to severe quality and safety standards. Under no circumstance, CapXon warrants that any CapXon product is suitable for the purposes intended for your application, even CapXon knows the application. It is customer's duty and obligation to check and make sure that CapXon products are suitable for the purposes intended and select the correct and proper CapXon product. Customers are requested to perform a sufficient validation and reliability evaluation to assure needed safety level and reliability performance by suitable designs and to apply proper safeguards (e.g. redundancies, protective circuits).

Particular operating conditions (ambient temperature, ripple current, voltage, thermal resistance, etc.) as well as storage, production or assembly may affect the performance and the lifetime of the capacitor. Please consult CapXon for lifetime estimation, failure mode considerations or worst-case scenarios according to the product technology, product tolerances / deviations or change of the characteristics of the capacitor due to shipment, storage, handling, production and usage.

For aerospace or military application, life-saving, life-sustaining, safety critical applications or any application where failure may cause severe personal injury or death, please consult us before design-in the capacitor in your application.

Except for the written expressed warranties, CapXon does not impliedly, by assumption or whatever else, warrant, undertake, promise any other warranty or guaranty for any CapXon product.

For further information, please visit our website www.capxongroup.com or contact CapXon directly.

PG SERIES ▪ HIGH TEMPERATURE 125°C TYPE



KEY FEATURES

- **SOLID CONDUCTIVE POLYMER** ▪ SMD type
- Especially for high temperature environments
- Endurance: 125°C ▪ 2000 hours
- Large permissible ripple current
- No dry-out effect guarantees extremely long life

SPECIFICATIONS

Items		Performance Characteristics
Operating Temperature Range		-55 ~ +125°C
Rated Voltage Range	V_R	6.3 ~ 50V DC
Surge Voltage	V_S	($V_R \le 20V$): $V_S = 1.15 \cdot V_R$ ($V_R \ge 25V$): $V_S = 1.10 \cdot V_R$
Capacitance Range	C_R	10 ~ 1500µF
Cap. Tolerance	ΔC	±20% (120Hz ▪ 20°C)
Leakage Current (20°C ▪ V_R applied)	I_{LEAK}	Not to exceed the values shown in standard ratings After 2 minutes
Dissipation Factor % (20°C ▪ 120Hz)	tanδ	Not to exceed the values shown in standard ratings
Equivalent Series Resistance (20°C ▪ 100kHz)	ESR	Not to exceed the values shown in standard ratings

Lifetime Test		
Endurance 125°C (V_R applied)	Test	**2000 hours**
	$\triangle C/C_R$	Within ±20% of the initial value
	tanδ	Not to exceed 150% of the value specified
	ESR	Not to exceed 150% of the value specified
	I_{Leak}	Less than the specified value
Moisture Resistance stored at 60°C (RH 90 ~ 95%)	Test	**1000 hours**
	$\triangle C/C_R$	Within ±20% of the initial value
	tanδ	Not to exceed 150% of the value specified
	ESR	Not to exceed 150% of the value specified
	I_{Leak}	Less than the specified value

DIMENSIONS STANDARD PACKAGE ▪ All dimensions in mm

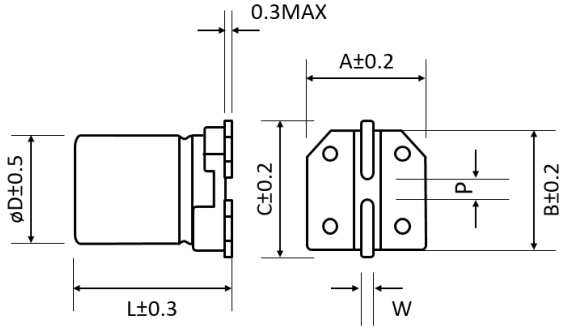

ø D	L	A	B	C	W	P±0.2
6.3	5.8	6.6	6.6	7.2	0.5 to 0.8	2.2
6.3	7.7	6.6	6.6	7.2	0.5 to 0.8	2.2
8	7.7	8.3	8.3	9	0.7 to 1.1	3.1
8	8.7	8.3	8.3	9	0.7 to 1.1	3.1
8	11.7	8.3	8.3	9	0.7 to 1.1	3.1
10	8.7	10.3	10.3	11	0.7 to 1.1	4.5
10	10.5	10.3	10.3	11	0.7 to 1.1	4.5
10	12.4	10.3	10.3	11	0.7 to 1.1	4.5

For further information please contact sales@capxon.org

STANDARD RATINGS

Part number shows blister tape on paper reel

V_R (V)	C_R (µF)	ø D (mm)	L (mm)	I_{LEAK} (µA, 2min)	tanδ +20°C ▪ 120Hz (%)	Max. ESR +20°C ▪ 100kHz (mΩ)	I_R ▪ Max. Ripple Current +105°C ▪ 100kHz (mA rms)	I_R ▪ Max. Ripple Current +125°C ▪ 100kHz (mA rms)	CapXon Part Number
6.3	100	6.3	5.8	300	8	35	2200	695	PG101M6R3E058PTR
	270	6.3	7.7	340	8	25	2800	885	PG271M6R3E077PTR
	470	8	7.7	592	8	25	3500	1100	PG471M6R3F077PTR
	820	8	11.7	1033	8	15	4700	1490	PG821M6R3F117PTR
	1000	10	10.5	1260	8	18	4400	1390	PG102M6R3G105PTR
	1500	10	12.4	1890	8	15	5100	1610	PG152M6R3G124PTR
10	56	6.3	5.8	300	8	35	2200	695	PG560M010E058PTR
	120	6.3	7.7	300	8	25	2800	885	PG121M010E077PTR
	150	6.3	7.7	300	8	25	2800	885	PG151M010E077PTR
	180	6.3	7.7	360	8	25	2800	885	PG181M010E077PTR
	270	8	7.7	540	8	25	3000	950	PG271M010F077PTR
	330	10	8.7	660	8	25	3500	1100	PG331M010G087PTR
	470	8	11.7	940	8	15	4200	1330	PG471M010F117PTR
	560	10	10.5	1120	8	18	4000	1265	PG561M010G105PTR
	820	10	12.4	1640	8	15	4500	1420	PG821M010G124PTR
16	47	6.3	5.8	400	10	50	1600	505	PG470M016E058PTR
	82	6.3	7.7	400	10	30	2200	695	PG820M016E077PTR
	100	6.3	7.7	400	10	30	2200	695	PG101M016E077PTR
	120	8	7.7	400	12	30	2800	885	PG121M016F077PTR
	150	8	8.7	480	12	28	3000	950	PG151M016F087PTR
	150	10	8.7	480	12	35	3000	930	PG151M016G087PTR
	180	8	11.7	576	12	20	3800	1200	PG181M016F117PTR
	180	10	8.7	576	12	35	3000	930	PG181M016G087PTR
	220	8	11.7	704	12	20	3800	1200	PG221M016F117PTR
	270	10	10.5	864	12	25	3500	1105	PG271M016G105PTR
	330	10	10.5	1056	12	25	3500	1105	PG331M016G105PTR
	390	10	12.4	1248	12	20	4000	1265	PG391M016G124PTR
	560	10	12.4	1792	12	20	4000	1265	PG561M016G124PTR
20	22	6.3	5.8	600	10	50	1600	505	PG220M020E058PTR
	33	6.3	5.8	600	10	50	1600	505	PG330M020E058PTR
	47	6.3	7.7	600	10	35	2200	695	PG470M020E077PTR
	56	6.3	7.7	600	10	35	2200	695	PG560M020E077PTR
	68	6.3	7.7	600	10	35	2200	695	PG680M020E077PTR
	82	8	7.7	600	12	35	2800	885	PG820M020F077PTR
	120	8	7.7	600	12	35	2800	885	PG121M020F077PTR
	150	8	11.7	600	12	25	3800	1200	PG151M020F117PTR
	180	8	11.7	720	12	25	3800	1200	PG181M020F117PTR
	180	10	10.5	720	12	27	3500	1105	PG181M020G105PTR
	220	10	10.5	880	12	27	3500	1105	PG221M020G105PTR
	330	10	12.4	1320	12	25	4000	1265	PG331M020G124PTR
25	10	6.3	5.8	600	10	60	1500	474	PG100M025E058PTR
	22	6.3	5.8	600	10	60	1500	474	PG220M025E058PTR
	39	6.3	7.7	600	10	35	2200	695	PG390M025E077PTR
	47	6.3	7.7	600	10	35	2200	695	PG470M025E077PTR

STANDARD RATINGS

Part number shows blister tape on paper reel

V_R (V)	C_R (µF)	ø D (mm)	L (mm)	I_{LEAK} (µA, 2min)	tanδ +20°C ▪ 120Hz (%)	Max. ESR +20°C ▪ 100kHz (mΩ)	I_R ▪ Max. Ripple Current +105°C ▪ 100kHz (mA rms)	I_R ▪ Max. Ripple Current +125°C ▪ 100kHz (mA rms)	CapXon Part Number
25	47	8	11.7	600	12	25	3500	1100	PG470M025F117PTR
	56	8	7.7	600	12	35	2800	885	PG560M025F077PTR
	68	8	7.7	600	12	35	2800	885	PG680M025F077PTR
	68	8	11.7	600	12	25	3800	1200	PG680M025F117PTR
	82	8	8.7	600	12	30	3000	950	PG820M025F087PTR
	82	8	11.7	600	12	25	3800	1200	PG820M025F117PTR
	82	10	8.7	600	12	35	2800	885	PG820M025G087PTR
	100	8	11.7	600	12	25	3800	1200	PG101M025F117PTR
	120	8	11.7	600	12	25	3800	1200	PG121M025F117PTR
	120	10	10.5	600	12	27	3500	1105	PG121M025G105PTR
	150	10	12.4	750	12	25	4000	1265	PG151M025G124PTR
	180	10	12.4	900	12	25	4000	1265	PG181M025G124PTR
35	10	6.3	5.8	600	12	75	980	310	PG100M035E058PTR
	18	6.3	7.7	600	12	60	1400	450	PG180M035E077PTR
	22	8	11.7	600	12	35	2300	730	PG220M035F117PTR
	27	6.3	7.7	600	12	60	1400	450	PG270M035E077PTR
	33	8	11.7	600	12	35	2300	730	PG330M035F117PTR
	39	8	8.7	600	12	40	1800	570	PG390M035F087PTR
	56	8	11.7	600	12	35	2300	730	PG560M035F117PTR
	68	10	10.5	600	12	32	2500	800	PG680M035G105PTR
	100	10	10.5	700	12	32	2500	800	PG101M035G105PTR
	100	10	12.4	700	12	30	3100	980	PG101M035G124PTR
	150	8	11.7	1050	12	25	4800	1650	PG151M035F117PTR
	180	10	10.5	1260	12	30	4400	1390	PG181M035G105PTR
50	10	8	7.7	100	12	75	1400	450	PG100M050F077PTR
	12	6.3	7.7	120	12	75	1400	450	PG120M050E077PTR
	22	8	8.7	220	12	50	1800	570	PG220M050F087PTR
	22	8	11.7	220	12	40	2400	760	PG220M050F117PTR
	22	10	8.7	220	12	55	1800	570	PG220M050G087PTR
	27	8	11.7	270	12	40	2400	760	PG270M050F117PTR
	33	10	10.5	330	12	42	2200	700	PG330M050G105PTR
	33	10	12.4	330	12	30	2800	885	PG330M050G124PTR
	47	10	12.4	470	12	30	2800	885	PG470M050G124PTR
	100	10	12.4	1000	12	30	2800	885	PG101M050G124PTR
	180	10	12.4	1800	12	24	3000	950	PG181M050G124PTR

MULTIPLIER K_f for RIPPLE CURRENT vs. FREQUENCY

Frequency (Hz)	120 ≤ Freq. < 1k	1k ≤ Freq. < 10k	10k ≤ Freq. < 100k	100k ≤ Freq. < 300k
Coefficient K_f	0.05	0.3	0.7	1

PRECAUTIONS, GUIDELINES AND PACKAGING INFORMATON

Unless otherwise agreed in individual specifications, all products are subject to our “General Precautions and Guidelines” as well as our “Packaging Information”. Please refer to the following links in the table.

General Precautions and Guidelines	Packaging Information Polymer SMD
Page 837	Page 727

DISCLAIMER

All product related data (e.g. specification, statements and general information) are subject to change without any notice. It is necessary that the customer observes all product related technical / application information and handling instructions.

CapXon products are designed and manufactured according to severe quality and safety standards. Under no circumstance, CapXon warrants that any CapXon product is suitable for the purposes intended for your application, even CapXon knows the application. It is customer's duty and obligation to check and make sure that CapXon products are suitable for the purposes intended and select the correct and proper CapXon product. Customers are requested to perform a sufficient validation and reliability evaluation to assure needed safety level and reliability performance by suitable designs and to apply proper safeguards (e.g. redundancies, protective circuits).

Particular operating conditions (ambient temperature, ripple current, voltage, thermal resistance, etc.) as well as storage, production or assembly may affect the performance and the lifetime of the capacitor. Please consult CapXon for lifetime estimation, failure mode considerations or worst-case scenarios according to the product technology, product tolerances / deviations or change of the characteristics of the capacitor due to shipment, storage, handling, production and usage.

For aerospace or military application, life-saving, life-sustaining, safety critical applications or any application where failure may cause severe personal injury or death, please consult us before design-in the capacitor in your application.

Except for the written expressed warranties, CapXon does not impliedly, by assumption or whatever else, warrant, undertake, promise any other warranty or guaranty for any CapXon product.

For further information, please visit our website www.capxongroup.com or contact CapXon directly.

PRODUCT CODE ▪ SMD CONDUCTIVE POLYMER CAPACITORS

SMD type example:
PV series ▪ 150µF ▪ 16V ▪ ±20% ▪ Ø 8mm ▪ H 7.7mm ▪ Tape & Reel

1	2	3	4	5	6	7	8	9	10	11	12	13	14	15	16	17	18	19	20
P	V	1	5	1	M	0	1	6	F	0	7	7	P	T	R	-	-	-	-
Series		Capacitance			Capacitance tolerance	Voltage			Case Ø (mm)	Height (mm)			Type code	Taping		Special requirement			

Code	µF
010	1
4R7	4.7
100	10
101	100
102	1000
152	1500

Code	%
M	±20

Code	Volt
2R5	2.5
004	4
6R3	6.3
010	10
016	16
020	20
025	25
035	35
050	50
063	63
080	80
100	100

Code	ØD
B	4
C	5
E	6.3
F	8
G	10

Code	H
055	5.5
058	5.8
077	7
087	8.7
105	10.5
117	11.7
124	12.4

Code	Type
P	Polymer

Code	
TR	Tape on reel

Code	Special
U	Plastic reel

See datasheet for reference

Please consult CapXon for further assistance

MARKING ▪ SMD CONDUCTIVE POLYMER CAPACITORS

Solid Conductive Polymer Capacitor ▪ SMD type

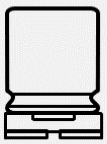

CapXon:	Manufacturer trademark
150:	Nominal capacitance (µF)
16V:	Rated voltage (V)
▬	(-) polarity (Cathode indicate)
PV:	PV Series
015:	Production datacode year/week (ex. 2020/15th week)

Top view



0 15 → Production week
→ Last digit of the year

For further information please contact sales@capxon.org

TAPING ▪ SMD CONDUCTIVE POLYMER CAPACITORS ▪ REEL PACK

SMD taping ▪ ØD 4mm to 10mm

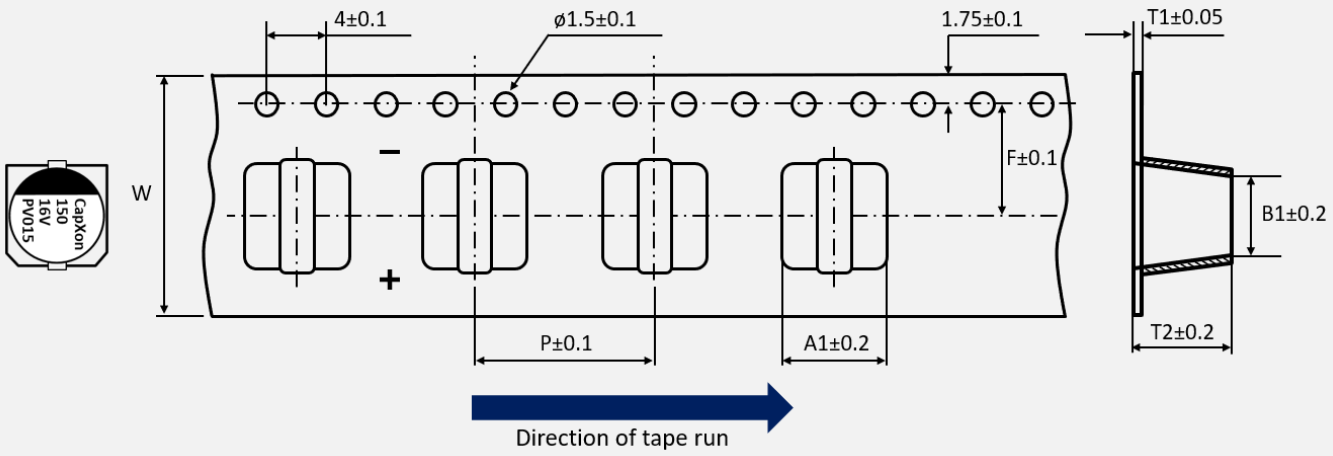

All dimensions in mm

Ø D	4 x 5.5	5 x 5.5	5 x 5.8	6.3 x 5.8	6.3 x 7.7	8 x 7.7
W	12	12	12	16	16	16
P	8	12	12	12	12	12
F	5.5	5.5	5.5	7.5	7.5	7.5
A1	4.7	5.7	5.7	7	7	8.7
B1	4.7	5.7	5.7	7	7	8.7
T1	0.4	0.4	0.4	0.4	0.4	0.4
T2	5.7	5.7	6.1	6.2	8	8.2

Ø D	8 x 8.7	8 x 10.5	8 x 11.7	10 x 8.7	10 x 10.5	10 x 12.4
W	24	24	24	24	24	24
P	16	16	16	16	16	16
F	11.5	11.5	11.5	11.5	11.5	11.5
A1	8.7	8.7	8.7	10.7	10.7	10.7
B1	8.7	8.7	8.7	10.7	10.7	10.7
T1	0.4	0.4	0.4	0.4	0.4	0.4
T2	11	11	13	11	11	12.9

For further information please contact sales@capxon.org

TAPING ▪ SMD CONDUCTIVE POLYMER CAPACITORS ▪ REEL PACK

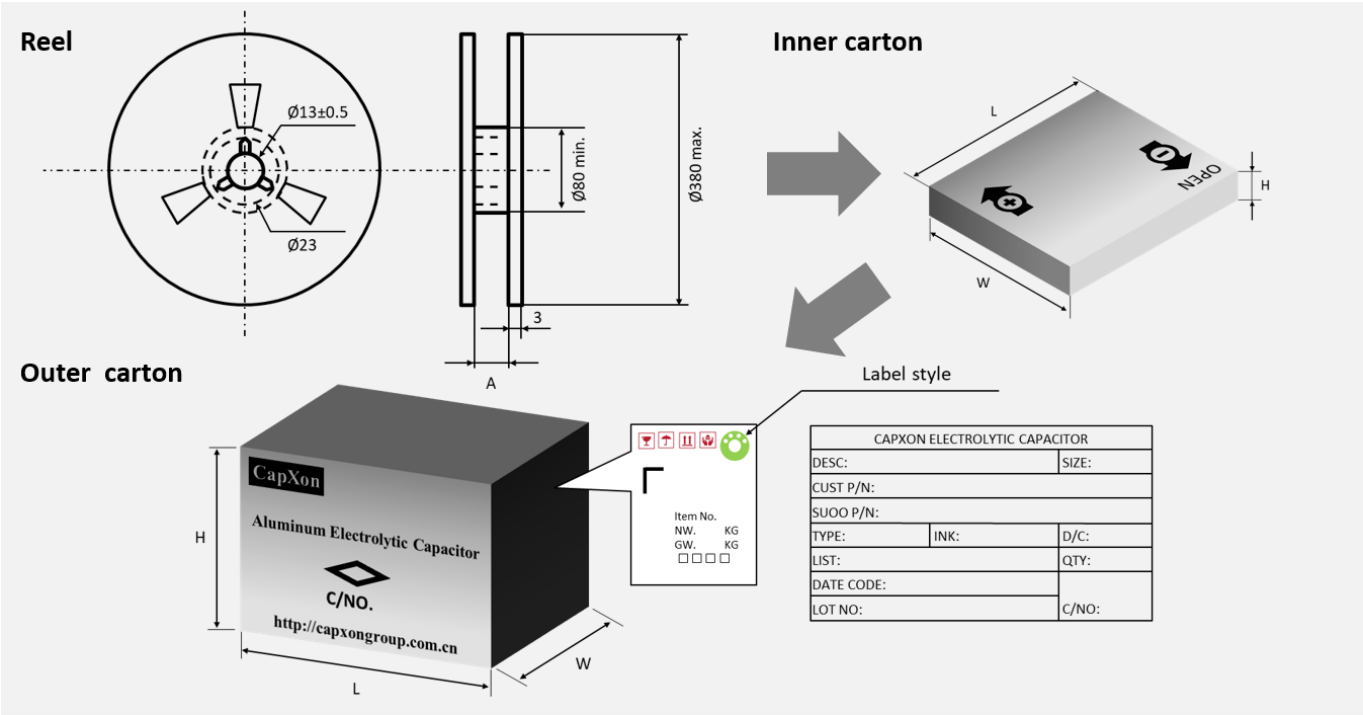

Ø D (mm)	L (mm)	A (mm)	Reel quantity (pcs)	Inner box quantity (pcs)	Inner box size L x W x H (mm)	Outer box quantity (pcs)	Outer box size L x W x H (mm)	Country of origin	Tariff number
4	5.5	14	2000	10000	400 x 390 x 106	30000	425 x 412 x 340	China	85322200
5	5.5	14	1000	5000	400 x 390 x 106	15000	425 x 412 x 340	China	85322200
	5.8	14	1000	5000	400 x 390 x 106	15000	425 x 412 x 340	China	85322200
6.3	5.8	18	1000	4000	400 x 390 x 106	12000	425 x 412 x 340	China	85322200
	7.7	18	900	3600	400 x 390 x 106	10800	425 x 412 x 340	China	85322200
8	7.7	18	700	2800	400 x 390 x 106	8400	425 x 412 x 340	China	85322200
	8.7	18	500	1500	400 x 390 x 106	4500	425 x 412 x 340	China	85322200
	10.5	26	500	1500	400 x 390 x 106	4500	425 x 412 x 340	China	85322200
	11.7	26	400	1200	400 x 390 x 106	3600	425 x 412 x 340	China	85322200
10	8.7	26	500	1500	400 x 390 x 106	4500	425 x 412 x 340	China	85322200
	10.5	26	500	1500	400 x 390 x 106	4500	425 x 412 x 340	China	85322200
	12.4	26	400	1200	400 x 390 x 106	3600	425 x 412 x 340	China	85322200

Remark: Standard = Paper reel
Plastic reel = Add code "U" at the end of the part number

DIMENSIONS STANDARD PACKAGE ▪ All dimensions in mm

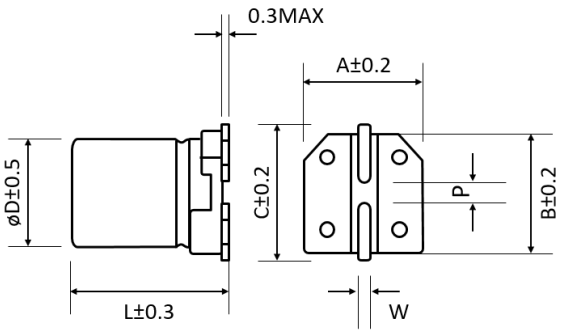

ø D	L	A	B	C	W	P±0.2
4	5.5	4.3	4.3	5.1	0.5 to 0.8	1
5	5.5	5.3	5.3	5.9	0.5 to 0.8	1.4
5	5.8	5.3	5.3	5.9	0.5 to 0.8	1.4
6.3	5.8	6.6	6.6	7.2	0.5 to 0.8	2.2
6.3	7.7	6.6	6.6	7.2	0.5 to 0.8	2.2
8	7.7	8.3	8.3	9.0	0.7 to 1.1	3.1
8	8.7	8.3	8.3	9.0	0.7 to 1.1	3.1
8	10.5	8.3	8.3	9.0	0.7 to 1.1	3.1
8	11.7	8.3	8.3	9.0	0.7 to 1.1	3.1
10	8.7	10.3	10.3	11.0	0.7 to 1.1	4.5
10	10.5	10.3	10.3	11.0	0.7 to 1.1	4.5
10	12.4	10.3	10.3	11.0	0.7 to 1.1	4.5

PAD LAYOUT STANDARD PACKAGE ▪ All dimensions in mm

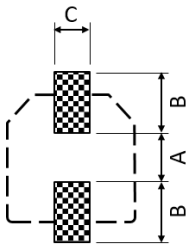

ø D	L	A	B	C
4	5.5	1	2.6	1.6
5	5.5	1.4	3.0	1.6
5	5.8	1.4	3.0	1.6
6.3	5.8	2.1	3.5	1.6
6.3	7.7	2.1	3.5	1.6
8	7.8	2.8	4.2	1.9
8	10.5	2.8	4.2	1.9
8	11.7	2.8	4.2	1.9
10	8.7	4.3	4.4	1.9
10	10.5	4.3	4.4	1.9
10	12.4	4.3	4.4	1.9

Solid Conductive Polymer Capacitors

Radial Types



OVERVIEW ▪ RADIAL CONDUCTIVE POLYMER CAPACITORS

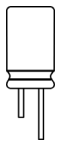

Features



Series	Page	High Temperature	High Voltage	Low ESR	Low Height	Standard	Ultra Low ESR	Ultra Long Life	Ultra Miniaturized	Temperature Range (°C)		Voltage Range (V)		Capacitance Range (µF)		Endurance (hours)
PS	733			●		●				-55	+105	2.5	25	39	3500	2000
PL	739			●						-55	+105	2.5	16	180	3500	2000
PU	744						●			-55	+105	2.5	10	180	3900	2000
PX	748			●	●					-55	+105	2.5	25	6.8	820	2000
PW	753			●	●					-55	+105	2.5	25	39	2500	2000
PE	757			●					●	-55	+105	2.5	16	270	1200	2000
PH	759		●	●						-55	+105	35	100	6.8	330	2000
PF	763			●				●		-55	+105	2.5	35	10	2700	5000
PT	768	●		●						-55	+125	2.5	50	22	2700	2000

For further information please contact sales@capxon.org

PS SERIES ▪ STANDARD TYPE



KEY FEATURES

- **SOLID CONDUCTIVE POLYMER** ▪ THT type
- Low ESR at high frequency range
- Endurance: 105°C ▪ 2000 hours
- Large permissible ripple current
- No dry-out effect guarantees extremely long life

SPECIFICATIONS

Items		Performance Characteristics
Operating Temperature Range		-55 ~ +105°C
Rated Voltage Range	V_R	2.5 ~ 25V DC
Surge Voltage	V_S	($V_R \le 20V$): $V_S = 1.15 \cdot V_R$ ($V_R \ge 25V$): $V_S = 1.10 \cdot V_R$
Capacitance Range	C_R	39 ~ 3500µF
Cap. Tolerance	ΔC	±20% (120Hz ▪ 20°C)
Leakage Current (20°C ▪ V_R applied)	I_{LEAK}	Not to exceed the values shown in standard ratings After 2 minutes
Dissipation Factor % (20°C ▪ 120Hz)	tanδ	Not to exceed the values shown in standard ratings
Equivalent Series Resistance (20°C ▪ 100kHz)	ESR	Not to exceed the values shown in standard ratings

Lifetime Test		
Endurance 105°C (V_R applied)	Test	**2000 hours**
	$\triangle C/C_R$	Within ±20% of the initial value
	tanδ	Not to exceed 150% of the value specified
	ESR	Not to exceed 150% of the value specified
	I_{Leak}	Less than the specified value
Moisture Resistance stored at 60°C (RH 90 ~ 95%)	Test	**1000 hours**
	$\triangle C/C_R$	Within ±20% of the initial value
	tanδ	Not to exceed 150% of the value specified
	ESR	Not to exceed 150% of the value specified
	I_{Leak}	Less than the specified value

DIMENSIONS ▪ All dimensions in mm

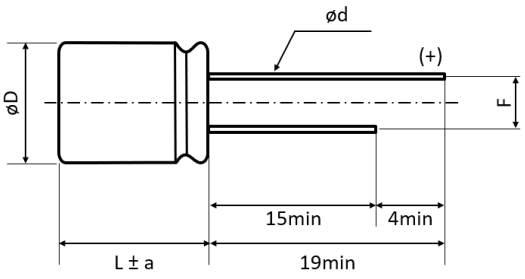

ø D	L	ØD+0.5max	a	F±0.5	Ød±0.05
8	8	8	1	3.5	0.6
8	11.5	8	1.5	3.5	0.6
10	12.5	10	1.5	5.0	0.6

For further information please contact sales@capxon.org

STANDARD RATINGS

Part number shows tape version with straight leads

V_R (V)	C_R (µF)	ø D (mm)	L (mm)	I_{LEAK} (µA, 2min)	tanδ +20°C ▪ 120Hz (%)	Max. ESR +20°C ▪ 100kHz (mΩ)	I_R ▪ Max. Ripple Current +105°C ▪ 100kHz (mA rms)	CapXon Part Number
2.5	560	8	8	280	8	12	5100	PS561M2R5F080PTD
	560	8	11.5	280	8	12	5100	PS561M2R5F115PTD
	680	8	8	340	8	12	5200	PS681M2R5F080PTD
	680	8	11.5	340	8	12	5200	PS681M2R5F115PTD
	820	8	8	410	8	12	5200	PS821M2R5F080PTD
	820	8	11.5	410	8	12	5200	PS821M2R5F115PTD
	1000	8	8	500	8	12	5500	PS102M2R5F080PTD
	1000	8	11.5	500	8	12	5500	PS102M2R5F115PTD
	1200	8	8	600	8	12	5500	PS122M2R5F080PTD
	1200	8	11.5	600	8	12	5500	PS122M2R5F115PTD
	1500	8	8	750	8	12	5500	PS152M2R5F080PTD
	1500	8	11.5	750	8	12	5500	PS152M2R5F115PTD
	2000	8	11.5	1000	8	12	5900	PS202M2R5F115PTD
	2000	10	12.5	1000	8	12	5900	PS202M2R5G125PTA
	2200	10	12.5	1100	8	12	5900	PS222M2R5G125PTA
	2500	10	12.5	1250	8	12	5900	PS252M2R5G125PTA
	2700	10	12.5	1350	8	12	5900	PS272M2R5G125PTA
	3000	10	12.5	1500	8	12	5900	PS302M2R5G125PTA
	3300	10	12.5	1650	8	12	5900	PS332M2R5G125PTA
	3500	10	12.5	1750	10	12	5900	PS352M2R5G125PTA
4	560	8	8	448	8	12	5100	PS561M004F080PTD
	560	8	11.5	448	8	12	5200	PS561M004F115PTD
	680	8	8	544	8	12	5100	PS681M004F080PTD
	680	8	11.5	544	8	12	5200	PS681M004F115PTD
	820	8	8	656	8	12	5100	PS821M004F080PTD
	820	8	11.5	656	8	12	5200	PS821M004F115PTD
	820	10	12.5	656	8	12	5900	PS821M004G125PTA
	1000	8	8	800	10	12	5100	PS102M004F080PTD
	1000	8	11.5	800	10	12	5500	PS102M004F115PTD
	1000	10	12.5	800	10	12	5900	PS102M004G125PTA
	1200	8	11.5	960	10	12	5500	PS122M004F115PTD
	1200	10	12.5	960	10	12	5900	PS122M004G125PTA
	1500	8	11.5	600	10	12	5500	PS152M004F115PTD
	1500	10	12.5	600	10	12	5900	PS152M004G125PTA
	2000	10	12.5	800	10	12	5900	PS202M004G125PTA
	2200	10	12.5	880	10	12	5900	PS222M004G125PTA
	2500	10	12.5	1000	10	12	5900	PS252M004G125PTA
6.3	180	8	8	227	7	21	5100	PS181M6R3F080PTD
	180	8	11.5	227	7	21	5100	PS181M6R3F115PTD
	220	8	8	277	7	21	5100	PS221M6R3F080PTD
	220	8	11.5	277	7	21	5100	PS221M6R3F115PTD
	270	8	8	340	7	21	5100	PS271M6R3F080PTD
	270	8	11.5	340	7	21	5100	PS271M6R3F115PTD
	330	8	8	416	7	15	5100	PS331M6R3F080PTD

See "PACKAGING INFORMATION" for pin treatment options.

STANDARD RATINGS

Part number shows tape version with straight leads

V_R (V)	C_R (µF)	ø D (mm)	L (mm)	I_{LEAK} (µA, 2min)	tanδ +20°C ▪ 120Hz (%)	Max. ESR +20°C ▪ 100kHz (mΩ)	I_R ▪ Max. Ripple Current +105°C ▪ 100kHz (mA rms)	CapXon Part Number
6.3	330	8	11.5	416	7	15	5500	PS331M6R3F115PTD
	390	8	8	491	8	15	5100	PS391M6R3F080PTD
	390	8	11.5	491	8	15	5500	PS391M6R3F115PTD
	470	8	8	592	8	12	5100	PS471M6R3F080PTD
	470	8	11.5	592	8	12	5500	PS471M6R3F115PTD
	560	8	8	706	8	12	5100	PS561M6R3F080PTD
	560	8	11.5	706	8	12	5500	PS561M6R3F115PTD
	680	8	8	428	8	10	5100	PS681M6R3F080PTD
	680	8	11.5	428	8	12	5500	PS681M6R3F115PTD
	680	10	12.5	428	8	12	5900	PS681M6R3G125PTA
	820	8	8	517	10	12	5100	PS821M6R3F080PTD
	820	8	11.5	517	10	12	5500	PS821M6R3F115PTD
	820	10	12.5	517	10	12	5900	PS821M6R3G125PTA
	1000	8	8	630	10	12	5100	PS102M6R3F080PTD
	1000	8	11.5	630	10	12	5500	PS102M6R3F115PTD
	1000	10	12.5	630	10	12	5900	PS102M6R3G125PTA
	1200	8	11.5	756	10	12	5500	PS122M6R3F115PTD
	1200	10	12.5	756	10	12	5900	PS122M6R3G125PTA
	1500	8	11.5	945	10	12	5500	PS152M6R3F115PTD
	1500	10	12.5	945	10	12	5900	PS152M6R3G125PTA
	2000	10	12.5	1260	10	12	5900	PS202M6R3G125PTA
	2200	10	12.5	1386	10	12	5900	PS222M6R3G125PTA
	2500	10	12.5	1575	10	12	5900	PS252M6R3G125PTA
10	180	8	8	180	8	15	5100	PS181M010F080PTD
	180	8	11.5	180	8	15	5500	PS181M010F115PTD
	220	8	8	220	8	15	5100	PS221M010F080PTD
	220	8	11.5	220	8	15	5500	PS221M010F115PTD
	270	8	8	270	8	15	5100	PS271M010F080PTD
	270	8	11.5	270	8	15	5500	PS271M010F115PTD
	330	8	8	330	8	12	5100	PS331M010F080PTD
	330	8	11.5	330	8	12	5500	PS331M010F115PTD
	390	8	8	390	8	12	5100	PS391M010F080PTD
	390	8	11.5	390	8	12	5500	PS391M010F115PTD
	470	8	8	470	8	12	5500	PS471M010F080PTD
	470	8	11.5	470	8	12	5500	PS471M010F115PTD
	560	8	8	560	8	12	5500	PS561M010F080PTD
	560	8	11.5	560	8	12	5500	PS561M010F115PTD
	680	8	8	680	10	12	5500	PS681M010F080PTD
	680	8	11.5	680	10	12	5900	PS681M010F115PTD
	680	10	12.5	680	10	12	5900	PS681M010G125PTA
	820	8	11.5	820	10	12	5900	PS821M010F115PTD
	820	10	12.5	820	10	12	5900	PS821M010G125PTA
	1000	8	11.5	1000	10	12	5900	PS102M010F115PTD
	1000	10	12.5	1000	10	12	5900	PS102M010G125PTA

See "PACKAGING INFORMATION" for pin treatment options.

STANDARD RATINGS

Part number shows tape version with straight leads

V_R (V)	C_R (µF)	ø D (mm)	L (mm)	I_{LEAK} (µA, 2min)	tanδ +20°C ▪ 120Hz (%)	Max. ESR +20°C ▪ 100kHz (mΩ)	I_R ▪ Max. Ripple Current +105°C ▪ 100kHz (mA rms)	CapXon Part Number
10	1200	10	12.5	1200	10	12	5900	PS122M010G125PTA
	1500	10	12.5	1500	10	12	5900	PS152M010G125PTA
16	100	8	11.5	160	8	12	4800	PS101M016F115PTD
	150	8	8	240	8	12	4500	PS151M016F080PTD
	180	8	8	288	8	15	4500	PS181M016F080PTD
	180	8	11.5	288	8	15	4800	PS181M016F115PTD
	220	8	8	352	8	15	4500	PS221M016F080PTD
	220	8	11.5	352	8	15	5000	PS221M016F115PTD
	270	8	8	432	8	12	4500	PS271M016F080PTD
	270	8	11.5	432	8	15	5000	PS271M016F115PTD
	270	10	12.5	432	8	12	5500	PS271M016G125PTA
	330	8	8	528	8	12	4500	PS331M016F080PTD
	330	8	11.5	528	8	12	5000	PS331M016F115PTD
	330	10	12.5	528	8	12	5500	PS331M016G125PTA
	390	8	8	624	8	12	4500	PS391M016F080PTD
	390	8	11.5	624	8	12	5000	PS391M016F115PTD
	390	10	12.5	624	8	12	5500	PS391M016G125PTA
	470	8	8	752	10	16	4500	PS471M016F080PTD
	470	8	11.5	752	10	12	5000	PS471M016F115PTD
	470	10	12.5	752	10	12	5500	PS471M016G125PTA
	560	8	8	896	12	16	4500	PS561M016F080PTD
	560	8	11.5	896	10	12	5000	PS561M016F115PTD
	560	10	12.5	896	10	12	5500	PS561M016G125PTA
	680	8	11.5	1088	12	14	5000	PS681M016F115PTD
	680	10	12.5	1088	10	12	5500	PS681M016G125PTA
	820	10	12.5	1312	10	12	5500	PS821M016G125PTA
	1000	10	12.5	1600	10	12	5500	PS102M016G125PTA
	1200	10	12.5	1920	12	12	5500	PS122M016G125PTA
20	39	8	8	156	8	25	3500	PS390M020F080PTD
	39	8	11.5	156	8	20	3800	PS390M020F115PTD
	47	8	8	188	8	25	3500	PS470M020F080PTD
	47	8	11.5	188	8	20	3800	PS470M020F115PTD
	68	8	8	272	8	25	3500	PS680M020F080PTD
	68	8	11.5	272	8	20	4100	PS680M020F115PTD
	82	8	8	328	8	20	3800	PS820M020F080PTD
	82	8	11.5	328	8	20	4100	PS820M020F115PTD
	100	8	8	400	8	18	3900	PS101M020F080PTD
	100	8	11.5	400	8	18	4200	PS101M020F115PTD
	100	10	12.5	400	8	18	4500	PS101M020G125PTA
	150	8	8	600	8	18	3900	PS151M020F080PTD
	150	8	11.5	600	8	18	4200	PS151M020F115PTD
	150	10	12.5	600	8	18	4500	PS151M020G125PTA
	180	8	8	720	8	18	3900	PS181M020F080PTD
	180	8	11.5	720	8	18	4200	PS181M020F115PTD

See "PACKAGING INFORMATION" for pin treatment options.

For further information please contact sales@capxon.org

STANDARD RATINGS

Part number shows tape version with straight leads

V_R (V)	C_R (µF)	ø D (mm)	L (mm)	I_{LEAK} (µA, 2min)	tanδ +20°C ▪ 120Hz (%)	Max. ESR +20°C ▪ 100kHz (mΩ)	I_R ▪ Max. Ripple Current +105°C ▪ 100kHz (mA rms)	CapXon Part Number
20	180	10	12.5	720	8	18	4500	PS181M020G125PTA
	220	8	8	880	8	18	3900	PS221M020F080PTD
	220	8	11.5	880	8	18	4200	PS221M020F115PTD
	220	10	12.5	880	8	18	4500	PS221M020G125PTA
	270	8	11.5	1080	8	15	4500	PS271M020F115PTD
	270	10	12.5	1080	8	15	4900	PS271M020G125PTA
	330	8	11.5	1320	8	15	4500	PS331M020F115PTD
	330	10	12.5	1320	8	15	4900	PS331M020G125PTA
	390	8	11.5	1560	8	15	4500	PS391M020F115PTD
	390	10	12.5	1560	8	15	4900	PS391M020G125PTA
	470	10	12.5	1880	8	15	4900	PS471M020G125PTA
	560	10	12.5	2240	10	20	4500	PS561M020G125PTA
	680	10	12.5	2720	10	20	4500	PS681M020G125PTA
	820	10	12.5	3280	12	20	4500	PS821M020G125PTA
	1000	10	12.5	2000	12	20	4500	PS102M020G125PTA
25	39	8	8	195	8	25	3500	PS390M025F080PTD
	39	8	11.5	195	8	20	3800	PS390M025F115PTD
	47	8	8	235	8	25	3500	PS470M025F080PTD
	47	8	11.5	235	8	20	3800	PS470M025F115PTD
	68	8	8	340	8	25	3500	PS680M025F080PTD
	68	8	11.5	340	8	20	4100	PS680M025F115PTD
	82	8	8	410	8	20	3800	PS820M025F080PTD
	82	8	11.5	410	8	20	4100	PS820M025F115PTD
	100	8	8	500	8	20	3900	PS101M025F080PTD
	100	8	11.5	500	8	20	4200	PS101M025F115PTD
	100	10	12.5	500	8	20	4500	PS101M025G125PTA
	150	8	8	750	8	20	3900	PS151M025F080PTD
	150	8	11.5	750	8	20	4200	PS151M025F115PTD
	150	10	12.5	750	8	20	4500	PS151M025G125PTA
	180	8	8	900	8	20	3900	PS181M025F080PTD
	180	8	11.5	900	8	20	4200	PS181M025F115PTD
	180	10	12.5	900	8	20	4500	PS181M025G125PTA
	220	8	8	1100	8	20	3900	PS221M025F080PTD
	220	8	11.5	1100	8	20	4200	PS221M025F115PTD
	220	10	12.5	1100	8	20	4500	PS221M025G125PTA
	270	8	11.5	1350	8	18	4400	PS271M025F115PTD
	270	10	12.5	1350	8	18	4800	PS271M025G125PTA
	330	8	11.5	1650	8	18	4400	PS331M025F115PTD
	330	10	12.5	1650	8	18	4800	PS331M025G125PTA
	390	10	12.5	1950	8	20	4500	PS391M025G125PTA
	470	10	12.5	2350	8	20	4500	PS471M025G125PTA
	560	10	12.5	2800	10	20	4500	PS561M025G125PTA
	680	10	12.5	3400	12	20	4500	PS681M025G125PTA
	820	10	12.5	2050	12	20	4500	PS821M025G125PTA

See "PACKAGING INFORMATION" for pin treatment options.

For further information please contact sales@capxon.org

MULTIPLIER K_f for RIPPLE CURRENT vs. FREQUENCY

Frequency (Hz)	120 ≤ Freq. < 1k	1k ≤ Freq. < 10k	10k ≤ Freq. < 100k	100k ≤ Freq. < 300k
Coefficient K_f	0.05	0.3	0.7	1

PRECAUTIONS, GUIDELINES AND PACKAGING INFORMATON

Unless otherwise agreed in individual specifications, all products are subject to our “General Precautions and Guidelines” as well as our “Packaging Information”. Please refer to the following links in the table.

General Precautions and Guidelines	Packaging Information Polymer Radial
Page 837	Page 772

DISCLAIMER

All product related data (e.g. specification, statements and general information) are subject to change without any notice. It is necessary that the customer observes all product related technical / application information and handling instructions.

CapXon products are designed and manufactured according to severe quality and safety standards. Under no circumstance, CapXon warrants that any CapXon product is suitable for the purposes intended for your application, even CapXon knows the application. It is customer's duty and obligation to check and make sure that CapXon products are suitable for the purposes intended and select the correct and proper CapXon product. Customers are requested to perform a sufficient validation and reliability evaluation to assure needed safety level and reliability performance by suitable designs and to apply proper safeguards (e.g. redundancies, protective circuits).

Particular operating conditions (ambient temperature, ripple current, voltage, thermal resistance, etc.) as well as storage, production or assembly may affect the performance and the lifetime of the capacitor. Please consult CapXon for lifetime estimation, failure mode considerations or worst-case scenarios according to the product technology, product tolerances / deviations or change of the characteristics of the capacitor due to shipment, storage, handling, production and usage.

For aerospace or military application, life-saving, life-sustaining, safety critical applications or any application where failure may cause severe personal injury or death, please consult us before design-in the capacitor in your application.

Except for the written expressed warranties, CapXon does not impliedly, by assumption or whatever else, warrant, undertake, promise any other warranty or guaranty for any CapXon product.

For further information, please visit our website www.capxongroup.com or contact CapXon directly.

PL SERIES ▪ ULTRA LOW ESR ≤ 9mΩ



KEY FEATURES

LOW ESR

- **SOLID CONDUCTIVE POLYMER** ▪ THT type
- Ultra-low ESR at high frequency range
- Endurance: 105°C ▪ 2000 hours
- Very large permissible ripple current
- No dry-out effect guarantees extremely long life

HF Halogen Free

RoHS & REACH COMPLIANT

SPECIFICATIONS

Items		Performance Characteristics
Operating Temperature Range		-55 ~ +105°C
Rated Voltage Range	V_R	2.5 ~ 16V DC
Surge Voltage	V_S	$V_S = 1.15 \cdot V_R$
Capacitance Range	C_R	180 ~ 3500µF
Cap. Tolerance	ΔC	±20% (120Hz ▪ 20°C)
Leakage Current (20°C ▪ V_R applied)	I_{LEAK}	Not to exceed the values shown in standard ratings After 2 minutes
Dissipation Factor % (20°C ▪ 120Hz)	tanδ	Not to exceed the values shown in standard ratings
Equivalent Series Resistance (20°C ▪ 100kHz)	ESR	Not to exceed the values shown in standard ratings

Lifetime Test		
Endurance 105°C (V_R applied)	Test	**2000 hours**
	△C/C_R	Within ±20% of the initial value
	tanδ	Not to exceed 150% of the value specified
	ESR	Not to exceed 150% of the value specified
	I_{Leak}	Less than the specified value
Moisture Resistance stored at 60°C (RH 90 ~ 95%)	Test	**1000 hours**
	△C/C_R	Within ±20% of the initial value
	tanδ	Not to exceed 150% of the value specified
	ESR	Not to exceed 150% of the value specified
	I_{Leak}	Less than the specified value

DIMENSIONS ▪ All dimensions in mm

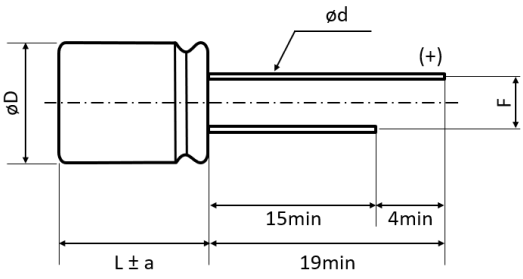

ø D	L	ØD+0.5max	a	F±0.5	Ød±0.05
8	8	8	1	3.5	0.6
8	11.5	8	1.5	3.5	0.6
10	12.5	10	1.5	5.0	0.6

For further information please contact sales@capxon.org

STANDARD RATINGS

Part number shows tape version with straight leads

V_R (V)	C_R (µF)	ø D (mm)	L (mm)	I_{LEAK} (µA, 2min)	tanδ +20°C ▪ 120Hz (%)	Max. ESR +20°C ▪ 100kHz (mΩ)	I_R ▪ Max. Ripple Current +105°C ▪ 100kHz (mA rms)	CapXon Part Number
2.5	560	8	8	280	8	9	6100	PL561M2R5F080PTD
	560	8	11.5	280	8	9	6100	PL561M2R5F115PTD
	680	8	8	340	8	9	6100	PL681M2R5F080PTD
	680	8	11.5	340	8	9	6100	PL681M2R5F115PTD
	820	8	8	410	8	9	6100	PL821M2R5F080PTD
	820	8	11.5	410	8	9	6100	PL821M2R5F115PTD
	1000	8	8	500	8	9	6100	PL102M2R5F080PTD
	1000	8	11.5	500	8	9	6100	PL102M2R5F115PTD
	1200	8	8	600	8	9	6100	PL122M2R5F080PTD
	1200	8	11.5	600	8	9	6100	PL122M2R5F115PTD
	1500	8	8	750	8	9	6100	PL152M2R5F080PTD
	1500	8	11.5	750	8	9	6100	PL152M2R5F115PTD
	1800	8	8	900	8	9	6100	PL182M2R5F080PTD
	2000	8	11.5	1000	8	9	6100	PL202M2R5F115PTD
	2000	10	12.5	1000	8	9	6640	PL202M2R5G125PTA
	2500	10	12.5	1250	8	9	6640	PL252M2R5G125PTA
	2700	10	12.5	1350	8	9	6640	PL272M2R5G125PTA
	3000	10	12.5	1500	8	9	6640	PL302M2R5G125PTA
	3300	10	12.5	1650	8	9	6640	PL332M2R5G125PTA
	3500	10	12.5	1750	8	9	6640	PL352M2R5G125PTA
4	560	8	8	224	8	9	6100	PL561M004F080PTD
	560	8	11.5	224	8	9	6100	PL561M004F115PTD
	680	8	8	272	8	9	6100	PL681M004F080PTD
	680	8	11.5	272	8	9	6100	PL681M004F115PTD
	820	8	8	328	8	9	6100	PL821M004F080PTD
	820	8	11.5	328	8	9	6100	PL821M004F115PTD
	820	10	12.5	328	8	9	6100	PL821M004G125PTA
	1000	8	8	800	8	9	6100	PL102M004F080PTD
	1000	8	11.5	800	8	9	6100	PL102M004F115PTD
	1200	8	8	960	8	9	6100	PL122M004F080PTD
	1200	8	11.5	960	8	9	6100	PL122M004F115PTD
	1200	10	12.5	960	8	9	6640	PL122M004G125PTA
	1500	8	11.5	1200	8	9	6100	PL152M004F115PTD
	1500	10	12.5	1200	8	9	6100	PL152M004G125PTA
	1800	8	11.5	1440	8	9	6500	PL182M004F115PTD
	2000	10	12.5	1600	8	9	6640	PL202M004G125PTA
	2500	10	12.5	1500	8	9	6640	PL252M004G125PTA
6.3	180	8	8	227	7	9	6100	PL181M6R3F080PTD
	180	8	11.5	227	7	9	6100	PL181M6R3F115PTD
	220	8	8	277	7	9	6100	PL221M6R3F080PTD
	220	8	11.5	277	7	9	6100	PL221M6R3F115PTD
	270	8	8	340	7	9	6100	PL271M6R3F080PTD
	270	8	11.5	340	7	9	6100	PL271M6R3F115PTD
	330	8	8	416	7	9	6100	PL331M6R3F080PTD
	330	8	11.5	416	7	9	6100	PL331M6R3F115PTD

See "PACKAGING INFORMATION" for pin treatment options.

STANDARD RATINGS

Part number shows tape version with straight leads

V_R (V)	C_R (µF)	ø D (mm)	L (mm)	I_{LEAK} (µA, 2min)	tanδ +20°C ▪ 120Hz (%)	Max. ESR +20°C ▪ 100kHz (mΩ)	I_R ▪ Max. Ripple Current +105°C ▪ 100kHz (mA rms)	CapXon Part Number
6.3	390	8	8	491	8	9	6100	PL391M6R3F080PTD
	390	8	11.5	491	8	9	6100	PL391M6R3F115PTD
	470	8	8	592	8	9	6100	PL471M6R3F080PTD
	470	8	11.5	592	8	9	6100	PL471M6R3F115PTD
	560	8	8	706	8	9	6100	PL561M6R3F080PTD
	560	8	11.5	706	8	9	6100	PL561M6R3F115PTD
	680	8	8	428	8	9	6100	PL681M6R3F080PTD
	680	8	11.5	428	8	9	6100	PL681M6R3F115PTD
	820	8	8	517	10	9	6100	PL821M6R3F080PTD
	820	8	11.5	517	10	9	6100	PL821M6R3F115PTD
	1000	8	8	630	10	9	6100	PL102M6R3F080PTD
	1000	8	11.5	630	10	9	6100	PL102M6R3F115PTD
	1000	10	12.5	630	10	9	6640	PL102M6R3G125PTA
	1200	8	8	756	10	9	6100	PL122M6R3F080PTD
	1200	8	11.5	756	10	9	6100	PL122M6R3F115PTD
	1200	10	12.5	756	10	9	6640	PL122M6R3G125PTA
	1500	8	11.5	945	10	9	6100	PL152M6R3F115PTD
	1500	10	12.5	945	10	9	6640	PL152M6R3G125PTA
	2000	10	12.5	1260	10	9	6640	PL202M6R3G125PTA
	2200	10	12.5	1336	10	9	6640	PL222M6R3G125PTA
	2500	10	12.5	1575	10	9	6640	PL252M6R3G125PTA
10	180	8	8	360	7	9	6100	PL181M010F080PTD
	180	8	11.5	360	7	9	5600	PL181M010F115PTD
	220	8	8	440	8	9	6100	PL221M010F080PTD
	220	8	11.5	440	8	9	5600	PL221M010F115PTD
	270	8	8	540	8	9	6100	PL271M010F080PTD
	270	8	11.5	540	8	9	5600	PL271M010F115PTD
	330	8	8	660	8	9	6100	PL331M010F080PTD
	330	8	11.5	660	8	9	5600	PL331M010F115PTD
	390	8	8	780	8	9	6100	PL391M010F080PTD
	390	8	11.5	780	8	9	5600	PL391M010F115PTD
	470	8	8	940	8	9	6100	PL471M010F080PTD
	470	8	11.5	940	8	9	5600	PL471M010F115PTD
	560	8	8	560	10	9	6100	PL561M010F080PTD
	560	8	11.5	560	10	9	5600	PL561M010F115PTD
	680	8	8	680	10	9	5600	PL681M010F080PTD
	680	8	11.5	680	10	9	5600	PL681M010F115PTD
	680	10	12.5	680	10	9	6100	PL681M010G125PTA
	820	8	11.5	820	10	9	5600	PL821M010F115PTD
	820	10	12.5	820	10	9	6100	PL821M010G125PTA
	1000	8	11.5	1000	10	9	5600	PL102M010F115PTD
	1000	10	12.5	1000	10	9	6100	PL102M010G125PTA
	1200	10	12.5	1200	10	9	6100	PL122M010G125PTA
	1500	10	12.5	1500	10	9	6100	PL152M010G125PTA

See "PACKAGING INFORMATION" for pin treatment options.

STANDARD RATINGS

Part number shows tape version with straight leads

V_R (V)	C_R (µF)	ø D (mm)	L (mm)	I_{LEAK} (µA, 2min)	tanδ +20°C ▪ 120Hz (%)	Max. ESR +20°C ▪ 100kHz (mΩ)	I_R ▪ Max. Ripple Current +105°C ▪ 100kHz (mA rms)	CapXon Part Number
16	180	8	11.5	576	8	9	5600	PL181M016F115PTD
	220	8	11.5	704	8	9	5600	PL221M016F115PTD
	270	8	8	864	8	9	5600	PL271M016F080PTD
	270	8	11.5	864	8	9	5600	PL271M016F115PTD
	330	8	8	528	8	9	5600	PL331M016F080PTD
	330	8	11.5	528	8	9	5600	PL331M016F115PTD
	330	10	12.5	528	8	9	6100	PL331M016G125PTA
	390	8	11.5	624	8	9	5600	PL391M016F115PTD
	390	10	12.5	624	8	9	6100	PL391M016G125PTA
	470	8	11.5	752	10	9	5600	PL471M016F115PTD
	470	10	12.5	752	10	9	6100	PL471M016G125PTA
	560	8	11.5	896	10	9	5600	PL561M016F115PTD
	560	10	12.5	896	10	9	6100	PL561M016G125PTA
	680	10	12.5	1000	10	9	6100	PL681M016G125PTA
	820	10	12.5	1280	10	9	6100	PL821M016G125PTA
	1000	10	12.5	1600	10	9	6100	PL102M016G125PTA

See "PACKAGING INFORMATION" for pin treatment options.

MULTIPLIER K_f for RIPPLE CURRENT vs. FREQUENCY

Frequency (Hz)	120 ≤ Freq. < 1k	1k ≤ Freq. < 10k	10k ≤ Freq. < 100k	100k ≤ Freq. < 300k
Coefficient K_f	0.05	0.3	0.7	1

PRECAUTIONS, GUIDELINES AND PACKAGING INFORMATON

Unless otherwise agreed in individual specifications, all products are subject to our "General Precautions and Guidelines" as well as our "Packaging Information". Please refer to the following links in the table.

General Precautions and Guidelines	Packaging Information Polymer Radial
Page 837	Page 772

For further information please contact sales@capxon.org

DISCLAIMER

All product related data (e.g. specification, statements and general information) are subject to change without any notice. It is necessary that the customer observes all product related technical / application information and handling instructions.

CapXon products are designed and manufactured according to severe quality and safety standards. Under no circumstance, CapXon warrants that any CapXon product is suitable for the purposes intended for your application, even CapXon knows the application. It is customer's duty and obligation to check and make sure that CapXon products are suitable for the purposes intended and select the correct and proper CapXon product. Customers are requested to perform a sufficient validation and reliability evaluation to assure needed safety level and reliability performance by suitable designs and to apply proper safeguards (e.g. redundancies, protective circuits).

Particular operating conditions (ambient temperature, ripple current, voltage, thermal resistance, etc.) as well as storage, production or assembly may affect the performance and the lifetime of the capacitor. Please consult CapXon for lifetime estimation, failure mode considerations or worst-case scenarios according to the product technology, product tolerances / deviations or change of the characteristics of the capacitor due to shipment, storage, handling, production and usage.

For aerospace or military application, life-saving, life-sustaining, safety critical applications or any application where failure may cause severe personal injury or death, please consult us before design-in the capacitor in your application.

Except for the written expressed warranties, CapXon does not impliedly, by assumption or whatever else, warrant, undertake, promise any other warranty or guaranty for any CapXon product.

For further information, please visit our website www.capxongroup.com or contact CapXon directly.

PU SERIES ▪ ULTRA LOW ESR ≤ 7mΩ



KEY FEATURES

LOW ESR

- **SOLID CONDUCTIVE POLYMER** ▪ THT type
- Ultra-low ESR at high frequency range
- Endurance: 105°C ▪ 2000 hours
- Very large permissible ripple current
- No dry-out effect guarantees extremely long life

HF Halogen Free

RoHS & REACH COMPLIANT

SPECIFICATIONS

Items		Performance Characteristics
Operating Temperature Range		-55 ~ +105°C
Rated Voltage Range	V_R	2.5 ~ 10V DC
Surge Voltage	V_S	$V_S = 1.15 \cdot V_R$
Capacitance Range	C_R	180 ~ 3900µF
Cap. Tolerance	ΔC	±20% (120Hz ▪ 20°C)
Leakage Current (20°C ▪ V_R applied)	I_{LEAK}	Not to exceed the values shown in standard ratings After 2 minutes
Dissipation Factor % (20°C ▪ 120Hz)	tanδ	Not to exceed the values shown in standard ratings
Equivalent Series Resistance (20°C ▪ 100kHz)	ESR	Not to exceed the values shown in standard ratings

Lifetime Test		
Endurance 105°C (V_R applied)	Test	**2000 hours**
	△C/C_R	Within ±20% of the initial value
	tanδ	Not to exceed 150% of the value specified
	ESR	Not to exceed 150% of the value specified
	I_{Leak}	Less than the specified value
Moisture Resistance stored at 60°C (RH 90 ~ 95%)	Test	**1000 hours**
	△C/C_R	Within ±20% of the initial value
	tanδ	Not to exceed 150% of the value specified
	ESR	Not to exceed 150% of the value specified
	I_{Leak}	Less than the specified value

DIMENSIONS ▪ All dimensions in mm

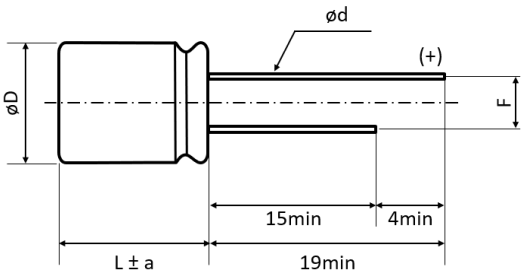

ø D	L	ØD+0.5max	a	F±0.5	Ød±0.05
8	8	8	1	3.5	0.6
8	11.5	8	1.5	3.5	0.6
10	12.5	10	1.5	5.0	0.6

For further information please contact sales@capxon.org

STANDARD RATINGS

Part number shows tape version with straight leads

V_R (V)	C_R (µF)	ø D (mm)	L (mm)	I_{LEAK} (µA, 2min)	tanδ +20°C ▪ 120Hz (%)	Max. ESR +20°C ▪ 100kHz (mΩ)	I_R ▪ Max. Ripple Current +105°C ▪ 100kHz (mA rms)	CapXon Part Number
2.5	560	8	8	280	8	7	6100	PU561M2R5F080PTD
	560	8	11.5	280	8	7	6100	PU561M2R5F115PTD
	680	8	8	340	8	7	6100	PU681M2R5F080PTD
	680	8	11.5	340	8	7	6100	PU681M2R5F115PTD
	820	8	8	410	8	7	6100	PU821M2R5F080PTD
	820	8	11.5	410	8	7	6100	PU821M2R5F115PTD
	1000	8	8	500	8	7	6100	PU102M2R5F080PTD
	1000	8	11.5	500	8	7	6100	PU102M2R5F115PTD
	1200	8	8	600	12	7	6100	PU122M2R5F080PTD
	1200	8	11.5	600	8	7	6100	PU122M2R5F115PTD
	1500	8	8	750	12	7	6100	PU152M2R5F080PTD
	1500	8	11.5	750	8	7	6100	PU152M2R5F115PTD
	1500	10	12.5	750	8	7	6100	PU152M2R5G125PTA
	2000	8	11.5	1000	8	7	6100	PU202M2R5F115PTD
	2000	10	12.5	1000	8	7	6100	PU202M2R5G125PTA
	2200	8	11.5	1100	8	7	6700	PU222M2R5F115PTD
	2500	10	12.5	1250	8	7	7100	PU252M2R5G125PTA
	2700	10	12.5	1350	8	7	7100	PU272M2R5G125PTA
	3000	10	12.5	1500	8	7	7100	PU302M2R5G125PTA
	3300	10	12.5	1650	8	7	7100	PU332M2R5G125PTA
	3500	10	12.5	1750	8	7	7100	PU352M2R5G125PTA
	3900	10	12.5	1950	8	7	7100	PU392M2R5G125PTA
4	560	8	8	224	8	7	6100	PU561M004F080PTD
	560	8	11.5	224	8	7	6100	PU561M004F115PTD
	680	8	8	272	8	7	6100	PU681M004F080PTD
	680	8	11.5	272	8	7	6100	PU681M004F115PTD
	820	8	8	328	8	7	6100	PU821M004F080PTD
	820	8	11.5	328	8	7	6100	PU821M004F115PTD
	820	10	12.5	328	8	7	6600	PU821M004G125PTA
	1000	8	8	800	8	7	6100	PU102M004F080PTD
	1000	8	11.5	800	8	7	6100	PU102M004F115PTD
	1000	10	12.5	800	8	7	6600	PU102M004G125PTA
	1200	8	11.5	960	8	7	6100	PU122M004F115PTD
	1200	10	12.5	960	8	7	6600	PU122M004G125PTA
	1500	8	11.5	1200	10	7	6100	PU152M004F115PTD
	1500	10	12.5	1200	10	7	6600	PU152M004G125PTA
	1800	10	12.5	1440	10	7	6600	PU182M004G125PTA
	2000	10	12.5	1600	10	7	6600	PU202M004G125PTA
	2200	10	12.5	1760	10	7	6600	PU222M004G125PTA
	2500	10	12.5	2000	10	7	6600	PU252M004G125PTA
	2700	10	12.5	2160	10	7	6900	PU272M004G125PTA
6.3	180	8	8	113	10	7	6100	PU181M6R3F080PTD
	180	8	11.5	113	10	7	6100	PU181M6R3F115PTD
	220	8	8	139	10	7	6100	PU221M6R3F080PTD

See "PACKAGING INFORMATION" for pin treatment options.

STANDARD RATINGS

Part number shows tape version with straight leads

V_R (V)	C_R (µF)	ø D (mm)	L (mm)	I_{LEAK} (µA, 2min)	tanδ +20°C ▪ 120Hz (%)	Max. ESR +20°C ▪ 100kHz (mΩ)	I_R ▪ Max. Ripple Current +105°C ▪ 100kHz (mA rms)	CapXon Part Number
6.3	220	8	11.5	139	10	7	6100	PU221M6R3F115PTD
	270	8	8	170	10	7	6100	PU271M6R3F080PTD
	270	8	11.5	170	10	7	6100	PU271M6R3F115PTD
	330	8	8	208	10	7	6100	PU331M6R3F080PTD
	330	8	11.5	208	10	7	6100	PU331M6R3F115PTD
	390	8	8	246	10	7	6100	PU391M6R3F080PTD
	390	8	11.5	246	10	7	6100	PU391M6R3F115PTD
	470	8	8	296	10	7	6100	PU471M6R3F080PTD
	470	8	11.5	296	10	7	6100	PU471M6R3F115PTD
	560	8	8	352	8	7	6100	PU561M6R3F080PTD
	560	8	11.5	352	8	7	6100	PU561M6R3F115PTD
	680	8	8	428	8	7	6100	PU681M6R3F080PTD
	680	8	11.5	428	8	7	6600	PU681M6R3F115PTD
	680	10	12.5	428	8	7	6600	PU681M6R3G125PTA
	820	8	8	517	10	7	6100	PU821M6R3F080PTD
	820	8	11.5	517	10	7	6600	PU821M6R3F115PTD
	820	10	12.5	517	10	7	6600	PU821M6R3G125PTA
	1000	8	8	630	10	7	6200	PU102M6R3F080PTD
	1000	8	11.5	630	10	7	7100	PU102M6R3F115PTD
	1000	10	12.5	630	10	7	7100	PU102M6R3G125PTA
	1200	8	11.5	756	10	7	7100	PU122M6R3F115PTD
	1200	10	12.5	756	10	7	7100	PU122M6R3G125PTA
	1500	10	12.5	945	10	7	7100	PU152M6R3G125PTA
	1800	10	12.5	1134	10	7	7100	PU182M6R3G125PTA
	2000	10	12.5	1260	10	7	7100	PU202M6R3G125PTA
	2500	10	12.5	1575	10	7	7100	PU252M6R3G125PTA
10	180	8	11.5	180	8	7	6600	PU181M010F115PTD
	220	8	11.5	220	8	7	6600	PU221M010F115PTD
	270	8	11.5	270	8	7	6600	PU271M010F115PTD
	330	8	11.5	330	8	7	6600	PU331M010F115PTD
	390	8	11.5	390	8	7	6600	PU391M010F115PTD
	470	8	11.5	470	8	7	6600	PU471M010F115PTD
	470	10	12.5	470	8	7	6600	PU471M010G125PTA
	560	8	11.5	560	8	7	6600	PU561M010F115PTD
	560	10	12.5	560	8	7	6600	PU561M010G125PTA
	680	8	11.5	680	10	7	6600	PU681M010F115PTD
	680	10	12.5	680	10	7	6600	PU681M010G125PTA
	820	8	11.5	820	10	7	7100	PU821M010F115PTD
	820	10	12.5	820	10	7	7100	PU821M010G125PTA
	1000	10	12.5	1000	10	7	7100	PU102M010G125PTA
	1200	10	12.5	1200	10	7	7100	PU122M010G125PTA
	1500	10	12.5	1500	10	7	7100	PU152M010G125PTA

See "PACKAGING INFORMATION" for pin treatment options.

MULTIPLIER K_f for RIPPLE CURRENT vs. FREQUENCY

Frequency (Hz)	120 ≤ Freq. < 1k	1k ≤ Freq. < 10k	10k ≤ Freq. < 100k	100k ≤ Freq. < 300k
Coefficient K_f	0.05	0.3	0.7	1

PRECAUTIONS, GUIDELINES AND PACKAGING INFORMATON

Unless otherwise agreed in individual specifications, all products are subject to our “General Precautions and Guidelines” as well as our “Packaging Information”. Please refer to the following links in the table.

General Precautions and Guidelines	Packaging Information Polymer Radial
Page 837	Page 772

DISCLAIMER

All product related data (e.g. specification, statements and general information) are subject to change without any notice. It is necessary that the customer observes all product related technical / application information and handling instructions.

CapXon products are designed and manufactured according to severe quality and safety standards. Under no circumstance, CapXon warrants that any CapXon product is suitable for the purposes intended for your application, even CapXon knows the application. It is customer's duty and obligation to check and make sure that CapXon products are suitable for the purposes intended and select the correct and proper CapXon product. Customers are requested to perform a sufficient validation and reliability evaluation to assure needed safety level and reliability performance by suitable designs and to apply proper safeguards (e.g. redundancies, protective circuits).

Particular operating conditions (ambient temperature, ripple current, voltage, thermal resistance, etc.) as well as storage, production or assembly may affect the performance and the lifetime of the capacitor. Please consult CapXon for lifetime estimation, failure mode considerations or worst-case scenarios according to the product technology, product tolerances / deviations or change of the characteristics of the capacitor due to shipment, storage, handling, production and usage.

For aerospace or military application, life-saving, life-sustaining, safety critical applications or any application where failure may cause severe personal injury or death, please consult us before design-in the capacitor in your application.

Except for the written expressed warranties, CapXon does not impliedly, by assumption or whatever else, warrant, undertake, promise any other warranty or guaranty for any CapXon product.

For further information, please visit our website www.capxongroup.com or contact CapXon directly.

PX SERIES ▪ LOW PROFILE TYPE



KEY FEATURES

MINIATURIZED

- **SOLID CONDUCTIVE POLYMER** ▪ THT type
- Low profile for space critical applications
- Endurance: 105°C ▪ 2000 hours
- Large permissible ripple current
- No dry-out effect guarantees extremely long life

HF Halogen Free

RoHS & REACH COMPLIANT

SPECIFICATIONS

Items		Performance Characteristics
Operating Temperature Range		-55 ~ +105°C
Rated Voltage Range	V_R	2.5 ~ 25V DC
Surge Voltage	V_S	($V_R \le 20V$): $V_S = 1.15 \cdot V_R$ ($V_R \ge 25V$): $V_S = 1.10 \cdot V_R$
Capacitance Range	C_R	6.8 ~ 820µF
Cap. Tolerance	ΔC	±20% (120Hz ▪ 20°C)
Leakage Current (20°C ▪ V_R applied)	I_{LEAK}	Not to exceed the values shown in standard ratings After 2 minutes
Dissipation Factor % (20°C ▪ 120Hz)	tanδ	Not to exceed the values shown in standard ratings
Equivalent Series Resistance (20°C ▪ 100kHz)	ESR	Not to exceed the values shown in standard ratings

Lifetime Test		
Endurance 105°C (V_R applied)	Test	**2000 hours**
	$\triangle C/C_R$	Within ±20% of the initial value
	tanδ	Not to exceed 150% of the value specified
	ESR	Not to exceed 150% of the value specified
	I_{Leak}	Less than the specified value
Moisture Resistance stored at 60°C (RH 90 ~ 95%)	Test	**1000 hours**
	$\triangle C/C_R$	Within ±20% of the initial value
	tanδ	Not to exceed 150% of the value specified
	ESR	Not to exceed 150% of the value specified
	I_{Leak}	Less than the specified value

DIMENSIONS ▪ All dimensions in mm

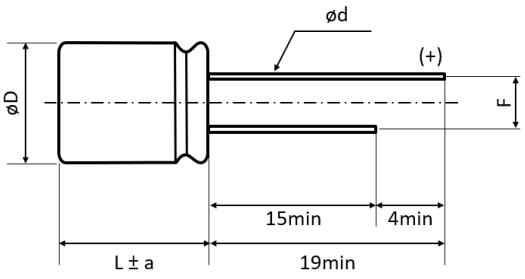

ø D	L	ØD+0.5max	a	F±0.5	Ød±0.05
4	5 and 7	4	1	1.5	0.45
4	10	5	1	1.5	0.5
5	5 and 7	5	1	2	0.45
5	8 and 9	5	1	2	0.5
5	11	5	1	2	0.6
6.3	5.2 and 7	6.3	1	2.5	0.45
6.3	9	6.3	1	2.5	0.5
6.3	11	6.3	1	2.5	0.6

For further information please contact sales@capxon.org

STANDARD RATINGS

Part number shows tape version with straight leads

V_R (V)	C_R (µF)	ø D (mm)	L (mm)	I_{LEAK} (µA, 2min)	tanδ +20°C ▪ 120Hz (%)	Max. ESR +20°C ▪ 100kHz (mΩ)	I_R ▪ Max. Ripple Current +105°C ▪ 100kHz (mA rms)	CapXon Part Number
2.5	100	4	5	300	8	30	1670	PX101M2R5B050PTF
	150	5	5	300	8	30	1970	PX151M2R5C050PTB
	150	6.3	5.2	300	8	30	2200	PX151M2R5E052PTC
	180	5	5	300	8	30	1970	PX181M2R5C050PTB
	220	5	5	300	8	30	2200	PX221M2R5C050PTB
	330	6.3	5.2	300	8	25	2610	PX331M2R5E052PTC
	390	6.3	5.2	300	8	20	2690	PX391M2R5E052PTC
	390	6.3	7	300	8	15	3100	PX391M2R5E070PTC
	470	6.3	5.2	300	8	20	2690	PX471M2R5E052PTC
	470	6.3	7	300	8	15	3100	PX471M2R5E070PTC
	560	5	9	300	8	15	3100	PX561M2R5C090PTB
	560	6.3	7	300	8	15	3100	PX561M2R5E070PTC
	680	6.3	11	300	8	15	3500	PX681M2R5E110PTC
4	100	5	5	300	8	30	1970	PX101M004C050PTB
	100	6.3	5.2	300	8	30	2200	PX101M004E052PTC
	150	6.3	7	300	8	25	2670	PX151M004E070PTC
	220	6.3	7	300	8	20	2690	PX221M004E070PTC
	270	6.3	5.2	300	8	25	2610	PX271M004E052PTC
	270	6.3	9	300	8	15	3300	PX271M004E090PTC
	330	6.3	5.2	300	8	20	2690	PX331M004E052PTC
	330	6.3	7	300	8	15	3100	PX331M004E070PTC
	390	6.3	9	300	8	15	3300	PX391M004E090PTC
	470	6.3	7	300	8	15	3100	PX471M004E070PTC
	560	6.3	11	300	8	15	3500	PX561M004E110PTC
6.3	82	6.3	5.2	300	8	30	2200	PX820M6R3E052PTC
	100	6.3	5.2	300	8	25	2390	PX101M6R3E052PTC
	100	6.3	7	300	8	20	2690	PX101M6R3E070PTC
	150	4	7	300	8	35	1900	PX151M6R3B070PTF
	220	5	7	300	8	20	2450	PX221M6R3C070PTB
	220	5	8	300	8	15	2690	PX221M6R3C080PTB
	220	6.3	5.2	300	8	20	2690	PX221M6R3E052PTC
	220	6.3	7	300	8	15	3100	PX221M6R3E070PTC
	220	6.3	9	300	8	15	3300	PX221M6R3E090PTC
	270	5	7	300	8	20	2450	PX271M6R3C070PTB
	270	5	8	300	8	15	2690	PX271M6R3C080PTB
	330	5	8	300	8	15	2690	PX331M6R3C080PTB
	330	5	9	300	8	15	3100	PX331M6R3C090PTB
	330	6.3	5.2	300	8	20	2690	PX331M6R3E052PTC
	330	6.3	9	300	8	15	3300	PX331M6R3E090PTC
	390	5	9	300	8	15	3100	PX391M6R3C090PTB
	390	6.3	11	300	8	15	3500	PX391M6R3E110PTC
	470	6.3	7	300	8	15	3100	PX471M6R3E070PTC
	680	6.3	9	300	8	15	3300	PX681M6R3E090PTC
	680	6.3	11	300	8	15	3500	PX681M6R3E110PTC
	820	6.3	11	300	8	15	3500	PX821M6R3E110PTC

See "PACKAGING INFORMATION" for pin treatment options.

STANDARD RATINGS

Part number shows tape version with straight leads

V_R (V)	C_R (µF)	ø D (mm)	L (mm)	I_{LEAK} (µA, 2min)	tanδ +20°C ▪ 120Hz (%)	Max. ESR +20°C ▪ 100kHz (mΩ)	I_R ▪ Max. Ripple Current +105°C ▪ 100kHz (mA rms)	CapXon Part Number
10	10	4	5	300	8	80	1200	PX100M010B050PTF
	22	4	5	300	8	80	1200	PX220M010B050PTF
	33	5	5	300	8	45	1670	PX330M010C050PTB
	33	6.3	5.2	300	8	30	2200	PX330M010E052PTC
	33	6.3	7	300	8	25	2410	PX330M010E070PTC
	39	5	5	300	8	45	1670	PX390M010C050PTB
	47	6.3	5.2	300	8	30	2200	PX470M010E052PTC
	47	6.3	7	300	8	20	2690	PX470M010E070PTC
	47	6.3	9	300	8	18	3100	PX470M010E090PTC
	56	6.3	5.2	300	8	30	2200	PX560M010E052PTC
	68	6.3	9	300	8	18	3100	PX680M010E090PTC
	82	6.3	5.2	300	8	30	2200	PX820M010E052PTC
	100	6.3	5.2	300	8	30	2200	PX101M010E052PTC
	100	6.3	9	300	8	18	3100	PX101M010E090PTC
	150	5	7	300	8	25	2100	PX151M010C070PTB
	150	6.3	5.2	300	8	25	2200	PX151M010E052PTC
	150	6.3	9	300	8	18	3100	PX151M010E090PTC
	180	5	11	300	8	20	2690	PX181M010C110PTB
	220	5	11	300	8	20	2690	PX221M010C110PTB
	220	6.3	9	300	8	15	3300	PX221M010E090PTC
	270	5	11	300	8	20	2690	PX271M010C110PTB
	270	6.3	7	300	8	20	3100	PX271M010E070PTC
	270	6.3	11	300	8	15	3500	PX271M010E110PTC
	330	6.3	9	300	8	15	3300	PX331M010E090PTC
	470	6.3	9	300	8	15	3300	PX471M010E090PTC
	470	6.3	11	300	8	15	3500	PX471M010E110PTC
16	10	6.3	5.2	300	8	30	2200	PX100M016E052PTC
	22	6.3	5.2	300	8	30	2200	PX220M016E052PTC
	22	6.3	7	300	8	25	2610	PX220M016E070PTC
	33	6.3	5.2	300	8	30	2200	PX330M016E052PTC
	33	6.3	7	300	8	25	2610	PX330M016E070PTC
	39	6.3	5.2	300	8	30	2200	PX390M016E052PTC
	47	6.3	5.2	300	8	30	2200	PX470M016E052PTC
	47	6.3	7	300	8	25	2610	PX470M016E070PTC
	82	6.3	7	300	8	20	2690	PX820M016E070PTC
	100	5	11	300	8	20	2690	PX101M016C110PTB
	100	6.3	5.2	300	8	30	2200	PX101M016E052PTC
	100	6.3	9	300	8	20	2900	PX101M016E090PTC
	100	6.3	11	300	8	15	3500	PX101M016E110PTC
	150	6.3	7	300	8	20	2690	PX151M016E070PTC
	180	6.3	9	300	8	20	3100	PX181M016E090PTC
	220	6.3	9	300	8	20	3100	PX221M016E090PTC
	220	6.3	11	300	8	15	3500	PX221M016E110PTC
	270	6.3	11	300	8	15	3500	PX271M016E110PTC
	330	6.3	9	300	8	15	3100	PX331M016E090PTC

See "PACKAGING INFORMATION" for pin treatment options.

For further information please contact sales@capxon.org

STANDARD RATINGS

Part number shows tape version with straight leads

V_R (V)	C_R (µF)	ø D (mm)	L (mm)	I_{LEAK} (µA, 2min)	tanδ +20°C ▪ 120Hz (%)	Max. ESR +20°C ▪ 100kHz (mΩ)	I_R ▪ Max. Ripple Current +105°C ▪ 100kHz (mA rms)	CapXon Part Number
20	10	6.3	5.2	300	8	30	2200	PX100M020E052PTC
	15	6.3	7	300	8	25	2670	PX150M020E070PTC
	22	6.3	5.2	300	8	30	2200	PX220M020E052PTC
	22	6.3	7	300	8	25	2670	PX220M020E070PTC
	33	6.3	7	300	8	25	2670	PX330M020E070PTC
	33	6.3	9	300	8	20	2900	PX330M020E090PTC
	47	6.3	7	300	8	25	2670	PX470M020E070PTC
	56	6.3	9	300	8	20	2900	PX560M020E090PTC
	68	6.3	9	300	8	20	2900	PX680M020E090PTC
	68	6.3	11	300	8	20	2900	PX680M020E110PTC
	82	6.3	11	300	8	20	2900	PX820M020E110PTC
25	6,8	6.3	5.2	300	8	40	1800	PX6R8M025E052PTC
	10	6.3	5.2	300	8	30	2200	PX100M025E052PTC
	10	6.3	7	300	8	25	2670	PX100M025E070PTC
	15	6.3	5.2	300	8	30	2200	PX150M025E052PTC
	15	6.3	7	300	8	25	2670	PX150M025E070PTC
	22	6.3	7	300	8	25	2670	PX220M025E070PTC
	27	6.3	9	300	8	25	2670	PX270M025E090PTC
	33	6.3	7	300	8	25	2670	PX330M025E070PTC
	33	6.3	5.2	300	8	30	2200	PX330M025E052PTC
	39	6.3	7	300	8	25	2670	PX390M025E070PTC
	47	6.3	9	300	8	25	2670	PX470M025E090PTC
	56	6.3	11	300	8	20	2900	PX560M025E110PTC
	68	6.3	11	300	8	20	2900	PX680M025E110PTC

See "PACKAGING INFORMATION" for pin treatment options.

MULTIPLIER K_f for RIPPLE CURRENT vs. FREQUENCY

Frequency (Hz)	120 ≤ Freq. < 1k	1k ≤ Freq. < 10k	10k ≤ Freq. < 100k	100k ≤ Freq. < 300k
Coefficient K_f	0.05	0.3	0.7	1

PRECAUTIONS, GUIDELINES AND PACKAGING INFORMATON

Unless otherwise agreed in individual specifications, all products are subject to our "General Precautions and Guidelines" as well as our "Packaging Information". Please refer to the following links in the table.

General Precautions and Guidelines	Packaging Information Polymer Radial
Page 837	Page 772

For further information please contact sales@capxon.org

DISCLAIMER

All product related data (e.g. specification, statements and general information) are subject to change without any notice. It is necessary that the customer observes all product related technical / application information and handling instructions.

CapXon products are designed and manufactured according to severe quality and safety standards. Under no circumstance, CapXon warrants that any CapXon product is suitable for the purposes intended for your application, even CapXon knows the application. It is customer's duty and obligation to check and make sure that CapXon products are suitable for the purposes intended and select the correct and proper CapXon product. Customers are requested to perform a sufficient validation and reliability evaluation to assure needed safety level and reliability performance by suitable designs and to apply proper safeguards (e.g. redundancies, protective circuits).

Particular operating conditions (ambient temperature, ripple current, voltage, thermal resistance, etc.) as well as storage, production or assembly may affect the performance and the lifetime of the capacitor. Please consult CapXon for lifetime estimation, failure mode considerations or worst-case scenarios according to the product technology, product tolerances / deviations or change of the characteristics of the capacitor due to shipment, storage, handling, production and usage.

For aerospace or military application, life-saving, life-sustaining, safety critical applications or any application where failure may cause severe personal injury or death, please consult us before design-in the capacitor in your application.

Except for the written expressed warranties, CapXon does not impliedly, by assumption or whatever else, warrant, undertake, promise any other warranty or guaranty for any CapXon product.

For further information, please visit our website www.capxongroup.com or contact CapXon directly.

PW SERIES ▪ LOW HEIGHT TYPE



KEY FEATURES

LOW HEIGHT

- **SOLID CONDUCTIVE POLYMER** ▪ THT type
- Low height for space critical applications
- Endurance: 105°C ▪ 2000 hours
- Large permissible ripple current
- No dry-out effect guarantees extremely long life

SPECIFICATIONS

Items		Performance Characteristics
Operating Temperature Range		-55 ~ +105°C
Rated Voltage Range	V_R	2.5 ~ 25V DC
Surge Voltage	V_S	($V_R \le 20V$): $V_S = 1.15 \cdot V_R$ ($V_R \ge 25V$): $V_S = 1.10 \cdot V_R$
Capacitance Range	C_R	39 ~ 2500µF
Cap. Tolerance	ΔC	±20% (120Hz ▪ 20°C)
Leakage Current (20°C ▪ V_R applied)	I_{LEAK}	Not to exceed the values shown in standard ratings After 2 minutes
Dissipation Factor % (20°C ▪ 120Hz)	tanδ	Not to exceed the values shown in standard ratings
Equivalent Series Resistance (20°C ▪ 100kHz)	ESR	Not to exceed the values shown in standard ratings

Lifetime Test		
Endurance 105°C (V_R applied)	Test	**2000 hours**
	△C/C_R	Within ±20% of the initial value
	tanδ	Not to exceed 150% of the value specified
	ESR	Not to exceed 150% of the value specified
	I_{Leak}	Less than the specified value
Moisture Resistance stored at 60°C (RH 90 ~ 95%)	Test	**1000 hours**
	△C/C_R	Within ±20% of the initial value
	tanδ	Not to exceed 150% of the value specified
	ESR	Not to exceed 150% of the value specified
	I_{Leak}	Less than the specified value

DIMENSIONS ▪ All dimensions in mm

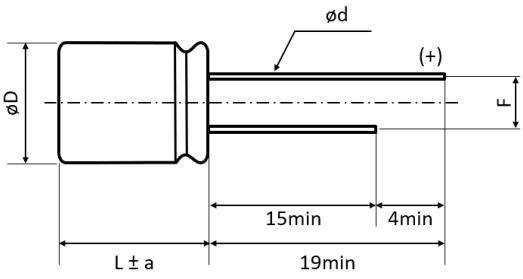

ø D	L	ØD+0.5max	a	F±0.5	Ød±0.05
8	7	8	1	3.5	0.6
10	7	10	1.5	5	0.6
10	10	10	1.5	5	0.6

For further information please contact sales@capxon.org

STANDARD RATINGS

Part number shows tape version with straight leads

V_R (V)	C_R (µF)	ø D (mm)	L (mm)	I_{LEAK} (µA, 2min)	tanδ +20°C ▪ 120Hz (%)	Max. ESR +20°C ▪ 100kHz (mΩ)	I_R ▪ Max. Ripple Current +105°C ▪ 100kHz (mA rms)	CapXon Part Number
2.5	820	8	7	410	8	20	3700	PW821M2R5F070PTD
	1000	8	7	500	8	20	3700	PW102M2R5F070PTD
	1200	10	7	600	8	15	4200	PW122M2R5G070PTA
	1500	10	7	750	10	15	4200	PW152M2R5G070PTA
	1800	10	7	900	10	15	4200	PW182M2R5G070PTA
	1800	10	10	900	10	12	4500	PW182M2R5G100PTA
	2000	10	7	1000	10	15	4200	PW202M2R5G070PTA
	2000	10	10	1000	10	12	4500	PW202M2R5G100PTA
	2500	10	10	1250	10	12	4500	PW252M2R5G100PTA
4	560	8	7	448	8	20	3700	PW561M004F070PTD
	680	8	7	544	8	20	3700	PW681M004F070PTD
	820	8	7	656	8	20	3700	PW821M004F070PTD
	820	10	7	656	8	15	4200	PW821M004G070PTA
	1000	10	7	800	10	15	4200	PW102M004G070PTA
	1200	10	7	960	10	15	4200	PW122M004G070PTA
	1200	10	10	960	10	12	4500	PW122M004G100PTA
	1500	10	7	1200	10	15	4200	PW152M004G070PTA
	1500	10	10	1200	10	12	4500	PW152M004G100PTA
	1800	10	10	1440	10	12	4500	PW182M004G100PTA
6.3	470	8	7	592	8	20	3700	PW471M6R3F070PTD
	560	8	7	706	8	20	3700	PW561M6R3F070PTD
	680	8	7	857	8	20	3700	PW681M6R3F070PTD
	820	8	7	1033	10	20	3700	PW821M6R3F070PTD
	820	10	7	1033	10	15	4200	PW821M6R3G070PTA
	1000	10	7	1260	10	15	4200	PW102M6R3G070PTA
	1000	10	10	1260	10	12	4500	PW102M6R3G100PTA
	1200	10	7	1512	10	15	4200	PW122M6R3G070PTA
	1200	10	10	1512	10	12	4500	PW122M6R3G100PTA
	1500	10	10	1890	10	12	4500	PW152M6R3G100PTA
10	330	8	7	660	8	20	3700	PW331M010F070PTD
	390	8	7	780	8	20	3700	PW391M010F070PTD
	470	8	7	940	8	20	3700	PW471M010F070PTD
	470	10	7	940	8	15	4200	PW471M010G070PTA
	560	10	7	1120	8	15	4200	PW561M010G070PTA
	560	10	10	1120	8	12	4500	PW561M010G100PTA
	680	10	7	1360	10	15	4200	PW681M010G070PTA
	680	10	10	1360	10	12	4500	PW681M010G100PTA
	820	10	7	1640	10	15	4200	PW821M010G070PTA
	820	10	10	1640	10	12	4500	PW821M010G100PTA
	1000	10	10	2000	10	12	4500	PW102M010G100PTA
16	180	8	7	576	8	20	3300	PW181M016F070PTD
	220	8	7	704	8	20	3300	PW221M016F070PTD
	270	8	7	864	8	20	3300	PW271M016F070PTD
	270	10	7	864	8	20	3700	PW271M016G070PTA

See "PACKAGING INFORMATION" for pin treatment options.

For further information please contact sales@capxon.org

STANDARD RATINGS

Part number shows tape version with straight leads

V_R (V)	C_R (µF)	ø D (mm)	L (mm)	I_{LEAK} (µA, 2min)	tanδ +20°C ▪ 120Hz (%)	Max. ESR +20°C ▪ 100kHz (mΩ)	I_R ▪ Max. Ripple Current +105°C ▪ 100kHz (mA rms)	CapXon Part Number
16	330	8	7	1056	10	20	3300	PW331M016F070PTD
	330	10	7	1056	10	20	3700	PW331M016G070PTA
	330	10	10	1056	10	15	4200	PW331M016G100PTA
	390	10	7	1248	10	20	3700	PW391M016G070PTA
	390	10	10	1248	10	20	4200	PW391M016G100PTA
	470	10	7	1504	10	20	3700	PW471M016G070PTA
	470	10	10	1504	10	15	4200	PW471M016G100PTA
	560	10	10	1792	10	15	4200	PW561M016G100PTA
20	56	8	7	224	8	25	3000	PW560M020F070PTD
	68	8	7	272	8	25	3000	PW680M020F070PTD
	82	8	7	328	8	25	3000	PW820M020F070PTD
	82	10	7	328	8	25	3400	PW820M020G070PTA
	100	8	7	400	8	25	3000	PW101M020F070PTD
	100	10	7	400	8	25	3400	PW101M020G070PTA
	100	10	10	400	8	20	3800	PW101M020G100PTA
	150	8	7	600	8	25	3000	PW151M020F070PTD
	150	10	7	600	8	25	3400	PW151M020G070PTA
	150	10	10	600	8	20	3800	PW151M020G100PTA
	180	8	7	720	8	25	3000	PW181M020F070PTD
	180	10	7	720	8	25	3400	PW181M020G070PTA
	180	10	10	720	8	20	3800	PW181M020G100PTA
	220	10	7	880	10	25	3400	PW221M020G070PTA
	220	10	10	880	10	20	3800	PW221M020G100PTA
	270	10	7	1080	10	25	3400	PW271M020G070PTA
	270	10	10	1080	10	20	3800	PW271M020G100PTA
	330	10	10	1320	10	20	3800	PW331M020G100PTA
25	39	8	7	195	8	25	3000	PW390M025F070PTD
	47	8	7	235	8	25	3000	PW470M025F070PTD
	56	8	7	280	8	25	3000	PW560M025F070PTD
	68	8	7	340	8	25	3000	PW680M025F070PTD
	68	10	7	340	8	25	3400	PW680M025G070PTA
	82	8	7	410	8	25	3000	PW820M025F070PTD
	82	10	7	410	8	25	3400	PW820M025G070PTA
	82	10	10	410	8	20	3800	PW820M025G100PTA
	100	10	7	500	10	25	3400	PW101M025G070PTA
	100	10	10	500	10	20	3800	PW101M025G100PTA
	120	10	7	600	10	25	3400	PW121M025G070PTA
	120	10	10	600	10	20	3800	PW121M025G100PTA
	150	10	7	750	10	25	3400	PW151M025G070PTA
	150	10	10	750	10	20	3800	PW151M025G100PTA
	180	10	10	900	10	20	3800	PW181M025G100PTA

See "PACKAGING INFORMATION" for pin treatment options.

For further information please contact sales@capxon.org

MULTIPLIER K_f for RIPPLE CURRENT vs. FREQUENCY

Frequency (Hz)	120 ≤ Freq. < 1k	1k ≤ Freq. < 10k	10k ≤ Freq. < 100k	100k ≤ Freq. < 300k
Coefficient K_f	0.05	0.3	0.7	1

PRECAUTIONS, GUIDELINES AND PACKAGING INFORMATON

Unless otherwise agreed in individual specifications, all products are subject to our “General Precautions and Guidelines” as well as our “Packaging Information”. Please refer to the following links in the table.

General Precautions and Guidelines	Packaging Information Polymer Radial
Page 837	Page 772

DISCLAIMER

All product related data (e.g. specification, statements and general information) are subject to change without any notice. It is necessary that the customer observes all product related technical / application information and handling instructions.

CapXon products are designed and manufactured according to severe quality and safety standards. Under no circumstance, CapXon warrants that any CapXon product is suitable for the purposes intended for your application, even CapXon knows the application. It is customer's duty and obligation to check and make sure that CapXon products are suitable for the purposes intended and select the correct and proper CapXon product. Customers are requested to perform a sufficient validation and reliability evaluation to assure needed safety level and reliability performance by suitable designs and to apply proper safeguards (e.g. redundancies, protective circuits).

Particular operating conditions (ambient temperature, ripple current, voltage, thermal resistance, etc.) as well as storage, production or assembly may affect the performance and the lifetime of the capacitor. Please consult CapXon for lifetime estimation, failure mode considerations or worst-case scenarios according to the product technology, product tolerances / deviations or change of the characteristics of the capacitor due to shipment, storage, handling, production and usage.

For aerospace or military application, life-saving, life-sustaining, safety critical applications or any application where failure may cause severe personal injury or death, please consult us before design-in the capacitor in your application.

Except for the written expressed warranties, CapXon does not impliedly, by assumption or whatever else, warrant, undertake, promise any other warranty or guaranty for any CapXon product.

For further information, please visit our website www.capxongroup.com or contact CapXon directly.

PE SERIES ▪ ULTRA MINIATURIZED TYPE

KEY FEATURES

MINIATURIZED



HF Halogen Free

RoHS & REACH COMPLIANT

- **SOLID CONDUCTIVE POLYMER** ▪ THT type
- Ultra-miniaturized type for space critical applications
- Endurance: 105°C ▪ 2000 hours
- Large permissible ripple current
- No dry-out effect guarantees extremely long life

SPECIFICATIONS

Items		Performance Characteristics
Operating Temperature Range		-55 ~ +105°C
Rated Voltage Range	V_R	2.5 ~ 16 V DC
Surge Voltage	V_S	$V_S = 1.15 \cdot V_R$
Capacitance Range	C_R	270 ~ 1200µF
Cap. Tolerance	ΔC	±20% (120Hz ▪ 20°C)
Leakage Current (20°C ▪ V_R applied)	I_{LEAK}	Not to exceed the values shown in standard ratings After 2 minutes
Dissipation Factor % (20°C ▪ 120Hz)	tanδ	Not to exceed the values shown in standard ratings
Equivalent Series Resistance (20°C ▪ 100kHz)	ESR	Not to exceed the values shown in standard ratings

Lifetime Test		
Endurance 105°C (V_R applied)	Test	**2000 hours**
	△C/C_R	Within ±20% of the initial value
	tanδ	Not to exceed 150% of the value specified
	ESR	Not to exceed 150% of the value specified
	I_{Leak}	Less than the specified value
Moisture Resistance stored at 60°C (RH 90 ~ 95%)	Test	**1000 hours**
	△C/C_R	Within ±20% of the initial value
	tanδ	Not to exceed 150% of the value specified
	ESR	Not to exceed 150% of the value specified
	I_{Leak}	Less than the specified value

DIMENSIONS ▪ All dimensions in mm

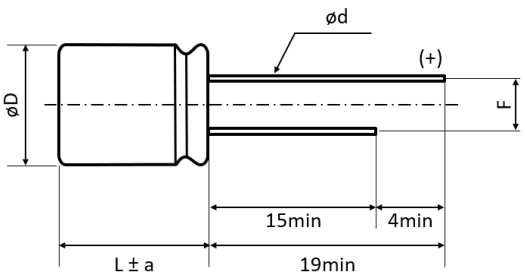

ø D	L	ØD+0.5max	a	F±0.5	Ød±0.05
6.3	8	6.3	1	2.5	0.6

For further information please contact sales@capxon.org

STANDARD RATINGS

Part number shows tape version with straight leads

V_R (V)	C_R (µF)	ø D (mm)	L (mm)	I_{LEAK} (µA, 2min)	tanδ +20°C ▪ 120Hz (%)	Max. ESR +20°C ▪ 100kHz (mΩ)	I_R ▪ Max. Ripple Current +105°C ▪ 100kHz (mA rms)	CapXon Part Number
2.5	560	6.3	8	280	8	7	5600	PE561M2R5E080PTC
	820	6.3	8	410	8	7	5600	PE821M2R5E080PTC
	1200	6.3	8	600	10	7	5600	PE122M2R5E080PTC
4	560	6.3	8	448	8	7	5600	PE561M004E080PTC
6.3	330	6.3	8	415	10	8	5000	PE331M6R3E080PTC
	470	6.3	8	592	8	7	5600	PE471M6R3E080PTC
	560	6.3	8	706	8	7	5600	PE561M6R3E080PTC
	680	6.3	8	857	8	7	5600	PE681M6R3E080PTC
16	270	6.3	8	864	8	15	4500	PE271M016E080PTC

See "PACKAGING INFORMATION" for pin treatment options.

MULTIPLIER K_f for RIPPLE CURRENT vs. FREQUENCY

Frequency (Hz)	120 ≤ Freq. < 1k	1k ≤ Freq. < 10k	10k ≤ Freq. < 100k	100k ≤ Freq. < 300k
Coefficient K_f	0.05	0.3	0.7	1

PRECAUTIONS, GUIDELINES AND PACKAGING INFORMATON

Unless otherwise agreed in individual specifications, all products are subject to our "General Precautions and Guidelines" as well as our "Packaging Information". Please refer to the following links in the table.

General Precautions and Guidelines	Packaging Information Polymer Radial
Page 837	Page 772

DISCLAIMER

All product related data (e.g. specification, statements and general information) are subject to change without any notice. It is necessary that the customer observes all product related technical / application information and handling instructions.

CapXon products are designed and manufactured according to severe quality and safety standards. Under no circumstance, CapXon warrants that any CapXon product is suitable for the purposes intended for your application, even CapXon knows the application. It is customer's duty and obligation to check and make sure that CapXon products are suitable for the purposes intended and select the correct and proper CapXon product. Customers are requested to perform a sufficient validation and reliability evaluation to assure needed safety level and reliability performance by suitable designs and to apply proper safeguards (e.g. redundancies, protective circuits).

Particular operating conditions (ambient temperature, ripple current, voltage, thermal resistance, etc.) as well as storage, production or assembly may affect the performance and the lifetime of the capacitor. Please consult CapXon for lifetime estimation, failure mode considerations or worst-case scenarios according to the product technology, product tolerances / deviations or change of the characteristics of the capacitor due to shipment, storage, handling, production and usage.

For aerospace or military application, life-saving, life-sustaining, safety critical applications or any application where failure may cause severe personal injury or death, please consult us before design-in the capacitor in your application.

Except for the written expressed warranties, CapXon does not impliedly, by assumption or whatever else, warrant, undertake, promise any other warranty or guaranty for any CapXon product.

For further information, please visit our website www.capxongroup.com or contact CapXon directly.

PH SERIES ▪ HIGH VOLTAGE & HIGH RELIABILITY



KEY FEATURES

HIGH VOLTAGE

- **SOLID CONDUCTIVE POLYMER** ▪ THT type
- Very high ripple current in smallest dimension
- Endurance: 105°C ▪ 2000 hours
- Low ESR at high frequency range
- No dry-out effect guarantees extremely long life

HF Halogen Free

RoHS & REACH COMPLIANT

SPECIFICATIONS

Items		Performance Characteristics
Operating Temperature Range		-55 ~ +105°C
Rated Voltage Range	V_R	35 ~ 100V DC
Surge Voltage	V_S	$V_S = 1.10 \cdot V_R$
Capacitance Range	C_R	6.8 ~ 330µF
Cap. Tolerance	ΔC	±20% (120Hz ▪ 20°C)
Leakage Current (20°C ▪ V_R applied)	I_{LEAK}	Not to exceed the values shown in standard ratings After 2 minutes
Dissipation Factor % (20°C ▪ 120Hz)	tanδ	Not to exceed the values shown in standard ratings
Equivalent Series Resistance (20°C ▪ 100kHz)	ESR	Not to exceed the values shown in standard ratings

Lifetime Test		
Endurance 105°C (V_R applied)	Test	**2000 hours**
	$\triangle C/C_R$	Within ±20% of the initial value
	tanδ	Not to exceed 150% of the value specified
	ESR	Not to exceed 150% of the value specified
	I_{Leak}	Less than the specified value
Moisture Resistance stored at 60°C (RH 90 ~ 95%)	Test	**1000 hours**
	$\triangle C/C_R$	Within ±20% of the initial value
	tanδ	Not to exceed 150% of the value specified
	ESR	Not to exceed 150% of the value specified
	I_{Leak}	Less than the specified value

DIMENSIONS ▪ All dimensions in mm

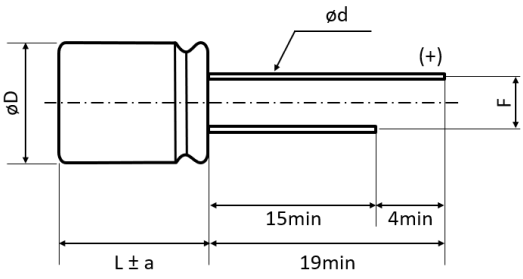

ø D	L	ØD+0.5max	a	F±0.5	Ød±0.05
6.3	8	6.3	1	2.5	0.5
8	8	8	1	3.5	0.6
8	9	8	1.5	3.5	0.6
8	11.5	8	1.5	3.5	0.6
10	10	10	1.5	5	0.6
10	12.5	10	1.5	5	0.6

STANDARD RATINGS

Part number shows tape version with straight leads

V_R (V)	C_R (µF)	ø D (mm)	L (mm)	I_{LEAK} (µA, 2min)	tanδ +20°C ▪ 120Hz (%)	Max. ESR +20°C ▪ 100kHz (mΩ)	I_R ▪ Max. Ripple Current +105°C ▪ 100kHz (mA rms)	CapXon Part Number
35	10	6.3	8	175	12	40	2100	PH100M035E080PTC
	10	8	8	175	12	35	2300	PH100M035F080PTD
	22	6.3	8	154	12	40	2100	PH220M035E080PTC
	22	8	11.5	154	12	30	2890	PH220M035F115PTD
	33	8	8	231	12	30	2500	PH330M035F080PTD
	33	8	11.5	231	12	25	3100	PH330M035F115PTD
	39	8	11.5	273	12	25	3100	PH390M035F115PTD
	47	8	8	329	12	30	2700	PH470M035F080PTD
	47	8	11.5	329	12	20	3600	PH470M035F115PTD
	47	10	12.5	329	12	20	3800	PH470M035G125PTA
	56	8	8	392	12	30	2700	PH560M035F080PTD
	56	8	11.5	392	12	20	3600	PH560M035F115PTD
	68	8	8	476	12	30	2700	PH680M035F080PTD
	68	8	11.5	476	12	20	3600	PH680M035F115PTD
	68	10	12.5	476	12	20	4000	PH680M035G125PTA
	82	8	11.5	574	12	20	3600	PH820M035F115PTD
	100	8	8	700	12	25	2800	PH101M035F080PTD
	100	8	11.5	700	12	20	3600	PH101M035F115PTD
	100	10	10	700	12	25	3000	PH101M035G100PTA
	100	10	12.5	700	12	20	4000	PH101M035G125PTA
	120	10	12.5	840	12	20	4400	PH121M035G125PTA
	150	10	12.5	1050	12	15	4400	PH151M035G125PTA
	180	10	12.5	1260	12	20	4000	PH181M035G125PTA
	220	10	12.5	1540	12	20	4000	PH221M035G125PTA
	270	10	12.5	1890	12	20	4000	PH271M035G125PTA
	330	10	12.5	2310	12	18	4400	PH331M035G125PTA
50	10	8	8	100	12	45	2100	PH100M050F080PTD
	12	6.3	8	120	12	50	1800	PH120M050E080PTC
	22	8	8	220	12	45	2300	PH220M050F080PTD
	27	8	11.5	390	12	32	2700	PH270M050F115PTD
	33	8	8	330	12	45	2300	PH330M050F080PTD
	33	8	11.5	330	12	32	2700	PH330M050F115PTD
	33	10	12.5	330	12	30	3000	PH330M050G125PTA
	39	8	11.5	390	12	32	2700	PH390M050F115PTD
	39	10	12.5	390	12	30	3000	PH390M050G125PTA
	47	8	11.5	470	12	30	2800	PH470M050F115PTD
	47	10	12.5	470	12	25	3400	PH470M050G125PTA
	56	8	11.5	560	12	30	2800	PH560M050F115PTD
	56	10	10	560	12	30	2800	PH560M050G100PTA
	56	10	12.5	560	12	25	3400	PH560M050G125PTA
	68	8	9	680	12	40	2400	PH680M050F090PTD
	68	8	11.5	680	12	30	2800	PH680M050F115PTD
	68	10	12.5	680	12	25	3400	PH680M050G125PTA
	82	10	12.5	820	12	25	3400	PH820M050G125PTA

See "PACKAGING INFORMATION" for pin treatment options.

STANDARD RATINGS

Part number shows tape version with straight leads

V_R (V)	C_R (µF)	ø D (mm)	L (mm)	I_{LEAK} (µA, 2min)	tanδ +20°C ▪ 120Hz (%)	Max. ESR +20°C ▪ 100kHz (mΩ)	I_R ▪ Max. Ripple Current +105°C ▪ 100kHz (mA rms)	CapXon Part Number
50	100	10	12.5	1000	12	25	3400	PH101M050G125PTA
	120	10	12.5	1200	12	25	3400	PH121M050G125PTA
63	10	8	8	126	12	45	1900	PH100M063F080PTD
	10	8	11.5	126	12	45	2100	PH100M063F115PTD
	22	8	8	277,2	12	45	2100	PH220M063F080PTD
	27	8	11.5	340	12	35	2300	PH270M063F115PTD
	33	8	11.5	415,8	12	35	2500	PH330M063F115PTD
	33	10	10	416	12	35	2700	PH330M063G100PTA
	39	8	11.5	491,4	12	35	2500	PH390M063F115PTD
	39	10	12.5	491,4	12	32	2900	PH390M063G125PTA
	47	8	11.5	592,2	12	35	2500	PH470M063F115PTD
	47	10	12.5	592,2	12	30	3000	PH470M063G125PTA
	56	10	12.5	705,6	12	30	3000	PH560M063G125PTA
	68	10	12.5	856,8	12	30	3000	PH680M063G125PTA
	82	10	12.5	1033,2	12	30	3000	PH820M063G125PTA
	150	10	12.5	1890	12	30	3000	PH151M063G125PTA
80	10	8	8	160	12	45	1900	PH100M080F080PTD
	12	8	11.5	192	12	38	2100	PH120M080F115PTD
	22	10	12.5	352	12	35	2800	PH220M080G125PTA
	27	10	12.5	432	12	35	2800	PH270M080G125PTA
	33	8	11.5	528	12	38	2100	PH330M080F115PTD
	33	10	12.5	528	12	35	2800	PH330M080G125PTA
100	6.8	8	8	136	12	45	1800	PH6R8M100F080PTD
	8.2	8	11.5	164	12	45	1800	PH8R2M100F115PTD
	10	8	11.5	200	12	42	2100	PH100M100F115PTD
	12	8	11.5	240	12	42	2100	PH120M100F115PTD
	12	10	12.5	240	12	40	2300	PH120M100G125PTA
	15	8	11.5	300	12	42	2100	PH150M100F115PTD
	18	10	12.5	360	12	35	2500	PH180M100G125PTA
	22	10	12.5	440	12	35	2800	PH220M100G125PTA
	27	10	12.5	540	12	35	2800	PH270M100G125PTA
	33	10	12.5	660	12	35	2800	PH330M100G125PTA

See "PACKAGING INFORMATION" for pin treatment options.

MULTIPLIER K_f for RIPPLE CURRENT vs. FREQUENCY

Frequency (Hz)	120 ≤ Freq. < 1k	1k ≤ Freq. < 10k	10k ≤ Freq. < 100k	100k ≤ Freq. < 300k
Coefficient K_f	0.05	0.3	0.7	1

For further information please contact sales@capxon.org

PRECAUTIONS, GUIDELINES AND PACKAGING INFORMATON

Unless otherwise agreed in individual specifications, all products are subject to our “General Precautions and Guidelines” as well as our “Packaging Information”. Please refer to the following links in the table.

	
General Precautions and Guidelines	Packaging Information Polymer Radial
Page 837	Page 772

DISCLAIMER

All product related data (e.g. specification, statements and general information) are subject to change without any notice. It is necessary that the customer observes all product related technical / application information and handling instructions.

CapXon products are designed and manufactured according to severe quality and safety standards. Under no circumstance, CapXon warrants that any CapXon product is suitable for the purposes intended for your application, even CapXon knows the application. It is customer's duty and obligation to check and make sure that CapXon products are suitable for the purposes intended and select the correct and proper CapXon product. Customers are requested to perform a sufficient validation and reliability evaluation to assure needed safety level and reliability performance by suitable designs and to apply proper safeguards (e.g. redundancies, protective circuits).

Particular operating conditions (ambient temperature, ripple current, voltage, thermal resistance, etc.) as well as storage, production or assembly may affect the performance and the lifetime of the capacitor. Please consult CapXon for lifetime estimation, failure mode considerations or worst-case scenarios according to the product technology, product tolerances / deviations or change of the characteristics of the capacitor due to shipment, storage, handling, production and usage.

For aerospace or military application, life-saving, life-sustaining, safety critical applications or any application where failure may cause severe personal injury or death, please consult us before design-in the capacitor in your application.

Except for the written expressed warranties, CapXon does not impliedly, by assumption or whatever else, warrant, undertake, promise any other warranty or guaranty for any CapXon product.

For further information, please visit our website www.capxongroup.com or contact CapXon directly.

PF SERIES ▪ ULTRA LONG LIFE TYPE ▪ 5 000 hours



KEY FEATURES

LONG LIFE

- **SOLID CONDUCTIVE POLYMER** ▪ THT type
- Ultra-low ESR at high frequency range
- Endurance: 105°C ▪ 5 000 hours
- Very large permissible ripple current
- No dry-out effect guarantees extremely long life

HF Halogen Free

RoHS & REACH COMPLIANT

SPECIFICATIONS

Items		Performance Characteristics
Operating Temperature Range		-55 ~ +105°C
Rated Voltage Range	V_R	2.5 ~ 35V DC
Surge Voltage	V_S	($V_R \le 20V$): $V_S = 1.15 \cdot V_R$ ($V_R \ge 25V$): $V_S = 1.10 \cdot V_R$
Capacitance Range	C_R	10 ~ 2700µF
Cap. Tolerance	ΔC	±20% (120Hz ▪ 20°C)
Leakage Current (20°C ▪ V_R applied)	I_{LEAK}	Not to exceed the values shown in standard ratings After 2 minutes
Dissipation Factor % (20°C ▪ 120Hz)	tanδ	Not to exceed the values shown in standard ratings
Equivalent Series Resistance (20°C ▪ 100kHz)	ESR	Not to exceed the values shown in standard ratings

Lifetime Test		
Endurance 105°C (V_R applied)	Test	**5 000 hours**
	$\triangle C/C_R$	Within ±20% of the initial value
	tanδ	Not to exceed 150% of the value specified
	ESR	Not to exceed 150% of the value specified
	I_{Leak}	Less than the specified value
Moisture Resistance stored at 60°C (RH 90 ~ 95%)	Test	**1 000 hours**
	$\triangle C/C_R$	Within ±20% of the initial value
	tanδ	Not to exceed 150% of the value specified
	ESR	Not to exceed 150% of the value specified
	I_{Leak}	Less than the specified value

DIMENSIONS ▪ All dimensions in mm

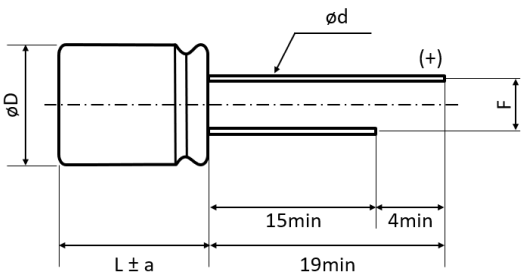

ø D	L	ØD+0.5max	a	F±0.5	Ød±0.05
4	5	4	1	1.5	0.45
5	8 and 9	5	1	2	0.5
6.3	5.2	6.3	1	2.5	0.5
6.3	8	6.3	1	2.5	0.5
6.3	11	6.3	1	2.5	0.6
8	7 and 8	8	1	3.5	0.6
8	11.5	8	1.5	3.5	0.6
10	12.5	10	1.5	5	0.6

For further information please contact sales@capxon.org

STANDARD RATINGS

Part number shows tape version with straight leads

V_R (V)	C_R (µF)	ø D (mm)	L (mm)	I_{LEAK} (µA, 2min)	tanδ +20°C ▪ 120Hz (%)	Max. ESR +20°C ▪ 100kHz (mΩ)	I_R ▪ Max. Ripple Current +105°C ▪ 100kHz (mA rms)	CapXon Part Number
2.5	100	5	8	300	8	9	4180	PF101M2R5C080PTB
	220	5	8	300	8	9	4180	PF221M2R5C080PTB
	300	5	9	300	8	9	4180	PF301M2R5C090PTB
	330	5	8	300	8	9	4180	PF331M2R5C080PTB
	330	6.3	8	300	8	9	5600	PF331M2R5E080PTC
	390	6.3	5.2	300	8	15	3100	PF391M2R5E052PTC
	470	5	8	300	8	9	4180	PF471M2R5C080PTB
	470	6.3	8	300	8	9	5600	PF471M2R5E080PTC
	560	5	8	300	8	9	4180	PF561M2R5C080PTB
	560	6.3	5.2	300	8	15	3100	PF561M2R5E052PTC
	560	6.3	8	300	8	9	5600	PF561M2R5E080PTC
	560	8	8	300	8	9	6100	PF561M2R5F080PTD
	820	6.3	8	410	8	9	5600	PF821M2R5E080PTC
	820	8	7	410	8	10	5000	PF821M2R5F070PTD
	820	8	8	410	8	9	6100	PF821M2R5F080PTD
	1000	8	8	500	8	9	6100	PF102M2R5F080PTD
	1500	8	11.5	750	8	9	6100	PF152M2R5F115PTD
	2000	10	12.5	1000	8	9	6640	PF202M2R5G125PTA
	2700	10	12.5	1350	8	9	6640	PF272M2R5G125PTA
4	270	6.3	8	300	8	9	5000	PF271M004E080PTC
	330	5	8	300	8	9	4050	PF331M004C080PTB
	390	6.3	8	312	8	9	5000	PF391M004E080PTC
	560	6.3	8	448	8	9	5600	PF561M004E080PTC
	560	8	7	448	8	15	3900	PF561M004F070PTD
	680	8	8	542	8	9	6100	PF681M004F080PTD
	820	8	8	656	8	9	6100	PF821M004F080PTD
	1000	8	11.5	800	8	9	6100	PF102M004F115PTD
	1200	10	12.5	960	8	9	6640	PF122M004G125PTA
	1500	10	12.5	1200	8	9	6640	PF152M004G125PTA
	2000	10	12.5	1600	8	9	6640	PF202M004G125PTA
6.3	220	6.3	5.2	300	8	18	2980	PF221M6R3E052PTC
	220	6.3	8	300	8	10	4500	PF221M6R3E080PTC
	270	5	8	340	8	10	3700	PF271M6R3C080PTB
	330	5	8	416	8	10	3700	PF331M6R3C080PTB
	330	6.3	8	416	8	9	5000	PF331M6R3E080PTC
	390	8	8	491	8	9	6100	PF391M6R3F080PTD
	390	8	7	491	8	15	3900	PF391M6R3F070PTD
	470	6.3	8	592	8	9	5100	PF471M6R3E080PTC
	470	8	8	592	8	9	6100	PF471M6R3F080PTD
	560	6.3	8	706	8	9	5100	PF561M6R3E080PTC
	560	8	8	706	8	9	6100	PF561M6R3F080PTD
	680	8	8	428	8	9	6100	PF681M6R3F080PTD
	820	8	8	517	10	9	6100	PF821M6R3F080PTD
	820	10	12.5	517	10	9	6640	PF821M6R3G125PTA

See "PACKAGING INFORMATION" for pin treatment options.

For further information please contact sales@capxon.org

STANDARD RATINGS

Part number shows tape version with straight leads

V_R (V)	C_R (µF)	ø D (mm)	L (mm)	I_{LEAK} (µA, 2min)	tanδ +20°C ▪ 120Hz (%)	Max. ESR +20°C ▪ 100kHz (mΩ)	I_R ▪ Max. Ripple Current +105°C ▪ 100kHz (mA rms)	CapXon Part Number
6.3	1000	8	11.5	630	10	9	6100	PF102M6R3F115PTD
	1200	8	11.5	756	10	9	6100	PF122M6R3F115PTD
	1500	10	12.5	945	10	9	6640	PF152M6R3G125PTA
	2000	10	12.5	1260	10	9	6640	PF202M6R3G125PTA
10	10	4	5	300	8	100	700	PF100M010B050PTF
	68	6.3	8	300	8	10	4500	PF680M010E080PTC
	100	6.3	8	300	8	10	4500	PF101M010E080PTC
	150	6.3	8	300	8	10	4500	PF151M010E080PTC
	270	8	7	270	8	22	3300	PF271M010F070PTD
	270	8	11.5	270	8	9	5600	PF271M010F115PTD
	330	8	11.5	330	8	9	5600	PF331M010F115PTD
	390	8	8	390	8	9	6100	PF391M010F080PTD
	470	8	8	470	8	9	6100	PF471M010F080PTD
	470	10	12.5	470	8	9	6100	PF471M010G125PTA
	560	8	8	560	10	9	6100	PF561M010F080PTD
	560	10	12.5	560	10	9	6100	PF561M010G125PTA
	680	8	11.5	680	10	9	6100	PF681M010F115PTD
	820	10	12.5	820	10	9	6640	PF821M010G125PTA
	1000	10	12.5	1000	10	9	6640	PF102M010G125PTA
16	100	6.3	5.2	300	8	24	2490	PF101M016E052PTC
	100	6.3	8	300	8	15	3500	PF101M016E080PTC
	100	6.3	11	300	8	12	4800	PF101M016E110PTC
	150	6.3	5.2	300	8	24	3200	PF151M016E052PTC
	150	8	7	300	8	22	3300	PF151M016F070PTD
	180	6.3	11	288	8	12	5600	PF181M016E110PTC
	180	8	8	288	8	10	5100	PF181M016F080PTD
	180	10	12.5	288	8	10	5600	PF181M016G125PTA
	220	8	8	352	8	10	5100	PF221M016F080PTD
	220	8	7	352	8	22	3300	PF221M016F070PTD
	270	8	8	432	8	10	5100	PF271M016F080PTD
	270	8	7	432	8	22	3300	PF271M016F070PTD
	270	10	12.5	432	8	10	5600	PF271M016G125PTA
	330	8	8	528	10	10	4700	PF331M016F080PTD
	330	8	11.5	528	8	10	5600	PF331M016F115PTD
	390	10	12.5	624	8	10	6100	PF391M016G125PTA
	470	8	11.5	752	10	10	5400	PF471M016F115PTD
	470	10	12.5	752	10	10	6100	PF471M016G125PTA
	560	8	11.5	896	10	10	6100	PF561M016F115PTD
	560	10	12.5	896	10	10	6100	PF561M016G125PTA
	1000	10	12.5	1600	10	12	5400	PF102M016G125PTA

See "PACKAGING INFORMATION" for pin treatment options.

For further information please contact sales@capxon.org

STANDARD RATINGS

Part number shows tape version with straight leads

V_R (V)	C_R (µF)	ø D (mm)	L (mm)	I_{LEAK} (µA, 2min)	tanδ +20°C ▪ 120Hz (%)	Max. ESR +20°C ▪ 100kHz (mΩ)	I_R ▪ Max. Ripple Current +105°C ▪ 100kHz (mA rms)	CapXon Part Number
20	120	6.3	5.2	480	12	25	3200	PF121M020E052PTC
	150	10	12.5	600	12	14	5000	PF151M020G125PTA
	180	8	7	720	12	25	3200	PF181M020F070PTD
	330	10	12.5	1320	12	14	5000	PF331M020G125PTA
	390	8	11.5	1560	12	14	4950	PF391M020F115PTD
	560	10	12.5	2240	12	12	5400	PF561M020G125PTA
	680	10	12.5	2720	12	12	5400	PF681M020G125PTA
25	56	6.3	5.2	280	12	30	2800	PF560M025E052PTC
	68	8	11.5	340	12	20	4100	PF680M025F115PTD
	82	6.3	8	410	12	28	2780	PF820M025E080PTC
	82	8	7	410	12	28	3000	PF820M025F070PTD
	100	8	11.5	500	12	20	4100	PF101M025F115PTD
	100	10	12.5	500	12	18	4650	PF101M025G125PTA
	180	8	8	900	12	18	3770	PF181M025F080PTD
	180	8	11.5	900	12	18	4200	PF181M025F115PTD
	220	8	11.5	1100	12	18	4200	PF221M025F115PTD
	270	10	12.5	1350	12	18	4650	PF271M025G125PTA
	330	10	12.5	1650	12	14	5000	PF331M025G125PTA
	390	10	12.5	1950	12	14	5000	PF391M025G125PTA
35	22	6.3	5.2	300	12	35	2600	PF220M035E052PTC
	33	10	12.5	231	12	25	3100	PF330M035G125PTA
	39	8	7	273	12	32	2800	PF390M035F070PTD
	68	8	11.5	476	12	20	3600	PF680M035F115PTD
	82	8	11.5	574	12	20	3600	PF820M035F115PTD
	120	10	12.5	840	12	18	4000	PF121M035G125PTA
	150	10	12.5	1050	12	18	4000	PF151M035G125PTA

See "PACKAGING INFORMATION" to formed products.

MULTIPLIER K_f for RIPPLE CURRENT vs. FREQUENCY

Frequency (Hz)	120 ≤ Freq. < 1k	1k ≤ Freq. < 10k	10k ≤ Freq. < 100k	100k ≤ Freq. < 300k
Coefficient K_f	0.05	0.3	0.7	1

PRECAUTIONS, GUIDELINES AND PACKAGING INFORMATON

Unless otherwise agreed in individual specifications, all products are subject to our "General Precautions and Guidelines" as well as our "Packaging Information". Please refer to the following links in the table.

General Precautions and Guidelines	Packaging Information Polymer Radial
Page 837	Page 772

For further information please contact sales@capxon.org

DISCLAIMER

All product related data (e.g. specification, statements and general information) are subject to change without any notice. It is necessary that the customer observes all product related technical / application information and handling instructions.

CapXon products are designed and manufactured according to severe quality and safety standards. Under no circumstance, CapXon warrants that any CapXon product is suitable for the purposes intended for your application, even CapXon knows the application. It is customer's duty and obligation to check and make sure that CapXon products are suitable for the purposes intended and select the correct and proper CapXon product. Customers are requested to perform a sufficient validation and reliability evaluation to assure needed safety level and reliability performance by suitable designs and to apply proper safeguards (e.g. redundancies, protective circuits).

Particular operating conditions (ambient temperature, ripple current, voltage, thermal resistance, etc.) as well as storage, production or assembly may affect the performance and the lifetime of the capacitor. Please consult CapXon for lifetime estimation, failure mode considerations or worst-case scenarios according to the product technology, product tolerances / deviations or change of the characteristics of the capacitor due to shipment, storage, handling, production and usage.

For aerospace or military application, life-saving, life-sustaining, safety critical applications or any application where failure may cause severe personal injury or death, please consult us before design-in the capacitor in your application.

Except for the written expressed warranties, CapXon does not impliedly, by assumption or whatever else, warrant, undertake, promise any other warranty or guaranty for any CapXon product.

For further information, please visit our website www.capxongroup.com or contact CapXon directly.

PT SERIES ▪ HIGH TEMPERATURE 125°C TYPE



KEY FEATURES

°C HIGH TEMPERATURE

- **SOLID CONDUCTIVE POLYMER** ▪ THT type
- Especially for high temperature environments
- Endurance: 125°C ▪ 2000 hours
- Very large permissible ripple current
- No dry-out effect guarantees extremely long life

HF Halogen Free

RoHS & REACH COMPLIANT

SPECIFICATIONS

Items		Performance Characteristics
Operating Temperature Range		-55 ~ +125°C
Rated Voltage Range	V_R	2.5 ~ 50V DC
Surge Voltage	V_S	($V_R \le 20V$): $V_S = 1.15 \cdot V_R$ ($V_R \ge 25V$): $V_S = 1.10 \cdot V_R$
Capacitance Range	C_R	22 ~ 2700µF
Cap. Tolerance	ΔC	±20% (120Hz ▪ 20°C)
Leakage Current (20°C ▪ V_R applied)	I_{LEAK}	Not to exceed the values shown in standard ratings After 2 minutes
Dissipation Factor % (20°C ▪ 120Hz)	tanδ	Not to exceed the values shown in standard ratings
Equivalent Series Resistance (20°C ▪ 100kHz)	ESR	Not to exceed the values shown in standard ratings

Lifetime Test		
Endurance 125°C (V_R applied)	Test	**2000 hours**
	△C/C_R	Within ±20% of the initial value
	tanδ	Not to exceed 150% of the value specified
	ESR	Not to exceed 150% of the value specified
	I_{Leak}	Less than the specified value
Moisture Resistance stored at 60°C (RH 90 ~ 95%)	Test	**1000 hours**
	△C/C_R	Within ±20% of the initial value
	tanδ	Not to exceed 150% of the value specified
	ESR	Not to exceed 150% of the value specified
	I_{Leak}	Less than the specified value

DIMENSIONS ▪ All dimensions in mm

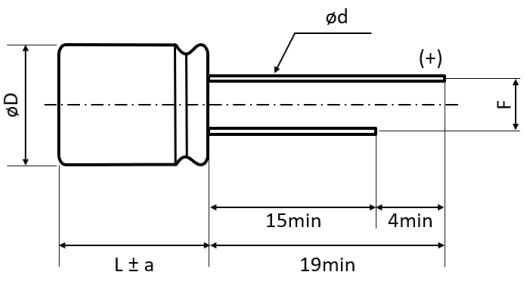

ø D	L	ØD+0.5max	a	F±0.5	Ød±0.05
6.3	5.2	6.3	1	2.5	0.45
6.3	11	6.3	1	2.5	0.6
8	7	8	1	3.5	0.6
8	8	8	1	3.5	0.6
8	11.5	8	1.5	3.5	0.6
10	8	10	1.5	5	0.6
10	10	10	1.5	5	0.6
10	12.5	10	1.5	5	0.6

For further information please contact sales@capxon.org

STANDARD RATINGS

Part number shows tape version with straight leads

V_R (V)	C_R (µF)	ø D (mm)	L (mm)	I_{LEAK} (µA, 2min)	tanδ +20°C ▪ 120Hz (%)	Max. ESR +20°C ▪ 100kHz (mΩ)	I_R ▪ Max. Ripple Current+105°C ▪ 100kHz (mA rms)	I_R ▪ Max. Ripple Current+125°C ▪ 100kHz (mA rms)	CapXon Part Number
2.5	820	8	8	410	8	9	5500	1741	PT821M2R5F080PTD
	1000	8	11.5	500	8	9	6100	1929	PT102M2R5F115PTD
	1500	8	11.5	750	8	9	6100	1929	PT152M2R5F115PTD
	2000	10	12.5	1000	8	9	6640	2100	PT202M2R5G125PTA
	2700	10	12.5	1350	8	9	6640	2100	PT272M2R5G125PTA
4	150	6.3	5.2	300	8	40	1810	572	PT151M004E052PTC
	330	8	7	264	8	30	3000	949	PT331M004F070PTD
	560	8	8	224	8	9	5500	1741	PT561M004F080PTD
	560	8	11.5	224	8	9	6100	1929	PT561M004F115PTD
	680	10	8	544	8	25	3700	1170	PT681M004G080PTA
	820	8	8	328	8	9	5500	1741	PT821M004F080PTD
	1200	8	11.5	960	8	9	6100	1929	PT122M004F115PTD
	1500	10	12.5	1200	8	9	6640	2100	PT152M004G125PTA
	2500	10	12.5	2000	8	9	6640	2100	PT252M004G125PTA
6.3	82	6.3	5.2	258	8	40	1800	569	PT820M6R3E052PTC
	150	8	7	473	8	30	3000	949	PT151M6R3F070PTD
	330	10	8	416	8	25	3700	1170	PT331M6R3G080PTA
	390	8	8	491	8	9	5500	1741	PT391M6R3F080PTD
	470	8	11.5	592	8	9	6100	1929	PT471M6R3F115PTD
	680	8	8	428	8	9	5500	1741	PT681M6R3F080PTD
	680	10	12.5	428	8	9	6100	1929	PT681M6R3G125PTA
	820	10	12.5	517	10	9	6100	1929	PT821M6R3G125PTA
	1000	8	11.5	630	10	9	6100	1929	PT102M6R3F115PTD
	1500	10	12.5	945	10	9	6640	2100	PT152M6R3G125PTA
	2000	10	12.5	1260	10	9	6640	2100	PT202M6R3G125PTA
10	56	6.3	5.2	280	8	40	1800	569	PT560M010E052PTC
	120	8	7	240	8	30	3000	949	PT121M010F070PTD
	220	8	11.5	220	8	9	6100	1929	PT221M010F115PTD
	270	10	8	270	8	25	3700	1170	PT271M010G080PTA
	330	8	11.5	330	8	9	6100	1929	PT331M010F115PTD
	560	10	12.5	560	10	9	6100	1929	PT561M010G125PTA
	680	8	11.5	680	10	9	6100	1929	PT681M010F115PTD
	1000	10	12.5	1000	10	9	6640	2100	PT102M010G125PTA
16	39	6.3	5.2	312	8	40	1800	569	PT390M016E052PTC
	82	8	7	300	8	30	2700	854	PT820M016F070PTD
	100	6.3	11	160	8	12	4800	1518	PT101M016E110PTC
	150	8	8	240	8	18	3600	1140	PT151M016F080PTD
	150	10	8	240	8	25	3300	1044	PT151M016G080PTA
	180	8	11.5	288	8	10	5600	1771	PT181M016F115PTD
	220	8	11.5	352	8	10	5600	1771	PT221M016F115PTD
	270	8	11.5	432	8	10	5600	1771	PT271M016F115PTD
	330	8	11.5	528	8	10	5600	1771	PT331M016F115PTD
	470	10	12.5	752	10	10	6100	1929	PT471M016G125PTA
	560	10	12.5	896	10	10	6100	1929	PT561M016G125PTA

See "PACKAGING INFORMATION" for pin treatment options.

For further information please contact sales@capxon.org

STANDARD RATINGS

Part number shows tape version with straight leads

V_R (V)	C_R (µF)	ø D (mm)	L (mm)	I_{LEAK} (µA, 2min)	tanδ +20°C ▪ 120Hz (%)	Max. ESR +20°C ▪ 100kHz (mΩ)	I_R ▪ Max. Ripple Current+105°C ▪ 100kHz (mA rms)	I_R ▪ Max. Ripple Current+125°C ▪ 100kHz (mA rms)	CapXon Part Number
20	22	6.3	5.2	220	12	60	1450	458	PT220M020E052PTC
	47	8	7	300	12	30	2700	854	PT470M020F070PTD
	68	10	8	272	12	30	3000	949	PT680M020G080PTA
	100	8	11.5	400	12	22	3900	1234	PT101M020F115PTD
	120	8	8	480	12	25	3100	981	PT121M020F080PTD
	150	8	11.5	600	12	22	3900	1234	PT151M020F115PTD
	150	10	12.5	600	12	20	4500	1424	PT151M020G125PTA
	270	10	12.5	1080	12	20	4900	1550	PT271M020G125PTA
25	68	8	11.5	340	12	24	3500	1108	PT680M025F115PTD
	82	8	8	410	12	25	3100	981	PT820M025F080PTD
	100	10	12.5	500	12	20	4500	1424	PT101M025G125PTA
	120	8	11.5	600	12	22	3900	1234	PT121M025F115PTD
	180	10	12.5	900	12	20	4500	1424	PT181M025G125PTA
35	39	8	8	273	12	32	2600	823	PT390M035F080PTD
	56	8	11.5	392	12	25	3200	1013	PT560M035F115PTD
	100	10	12.5	700	12	22	4000	1266	PT101M035G125PTA
50	22	8	8	220	12	35	2500	790	PT220M050F080PTD
	27	8	11.5	270	12	32	2700	854	PT270M050F115PTD
	33	10	10	330	12	30	3476	1100	PT330M050G100PTA
	47	10	12.5	470	12	25	4100	1297	PT470M050G125PTA

See "PACKAGING INFORMATION" for pin treatment options.

MULTIPLIER K_f for RIPPLE CURRENT vs. FREQUENCY

Frequency (Hz)	120 ≤ Freq. < 1k	1k ≤ Freq. < 10k	10k ≤ Freq. < 100k	100k ≤ Freq. < 300k
Coefficient K_f	0.05	0.3	0.7	1

PRECAUTIONS, GUIDELINES AND PACKAGING INFORMATON

Unless otherwise agreed in individual specifications, all products are subject to our "General Precautions and Guidelines" as well as our "Packaging Information". Please refer to the following links in the table.

General Precautions and Guidelines	Packaging Information Polymer Radial
Page 837	Page 772

For further information please contact sales@capxon.org

DISCLAIMER

All product related data (e.g. specification, statements and general information) are subject to change without any notice. It is necessary that the customer observes all product related technical / application information and handling instructions.

CapXon products are designed and manufactured according to severe quality and safety standards. Under no circumstance, CapXon warrants that any CapXon product is suitable for the purposes intended for your application, even CapXon knows the application. It is customer's duty and obligation to check and make sure that CapXon products are suitable for the purposes intended and select the correct and proper CapXon product. Customers are requested to perform a sufficient validation and reliability evaluation to assure needed safety level and reliability performance by suitable designs and to apply proper safeguards (e.g. redundancies, protective circuits).

Particular operating conditions (ambient temperature, ripple current, voltage, thermal resistance, etc.) as well as storage, production or assembly may affect the performance and the lifetime of the capacitor. Please consult CapXon for lifetime estimation, failure mode considerations or worst-case scenarios according to the product technology, product tolerances / deviations or change of the characteristics of the capacitor due to shipment, storage, handling, production and usage.

For aerospace or military application, life-saving, life-sustaining, safety critical applications or any application where failure may cause severe personal injury or death, please consult us before design-in the capacitor in your application.

Except for the written expressed warranties, CapXon does not impliedly, by assumption or whatever else, warrant, undertake, promise any other warranty or guaranty for any CapXon product.

For further information, please visit our website www.capxongroup.com or contact CapXon directly.

PRODUCT CODE ▪ RADIAL CONDUCTIVE POLYMER CAPACITORS

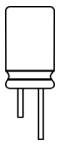

THT type example:
PH series ▪ 330µF ▪ 35V ▪ ±20% ▪ Ø 10mm ▪ L 12.5mm ▪ P 5mm ▪ Tape Ammo

1	2	3	4	5	6	7	8	9	10	11	12	13	14	15	16	17	18	19	20
P	H	3	3	1	M	0	3	5	G	1	2	5	P	T	A	-	-	-	-
Series		Capacitance			Capacitance tolerance	Voltage			Case Ø (mm)	Height (mm)			Type code	Taping / lead treatment *		Special requirement			

Code	µF
010	1
4R7	4.7
100	10
101	100
102	1000
152	1500

Code	%
M	±20

Code	Volt
2R5	2.5
004	4
6R3	6.3
010	10
016	16
020	20
025	25
035	35
050	50
063	63
080	80
100	100

Code	ØD
B	4
C	5
E	6.3
F	8
G	10

Code	H
080	8
090	9
100	10
115	11.5
125	12.5
180	18

Code	Type
P	Polymer

Code	Pitch (mm)
TB	2
TC	2.5
TD	3.5
TA	5

*** See chapter taping or lead treatment for further information**
Please consult CapXon for further assistance

MARKING ▪ RADIAL CONDUCTIVE POLYMER CAPACITORS

Solid Conductive Polymer Capacitor ▪ Radial type

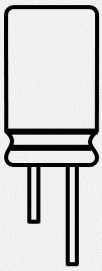

CapXon: Manufacturer trademark
330: Nominal capacitance (µF)
35V: Rated voltage (V) ▪ Standard type
(-) polarity (Cathode indicate)

PH: PH Series
007: Production datacode year/week
(ex. 2020/7th week)

Top view



0 07
→ Production week
→ Last digit of the year

For further information please contact sales@capxon.org

TAPING ▪ RADIAL CONDUCTIVE POLYMER CAPACITORS ▪ AMMO PACK

Taping ▪ ØD 4mm

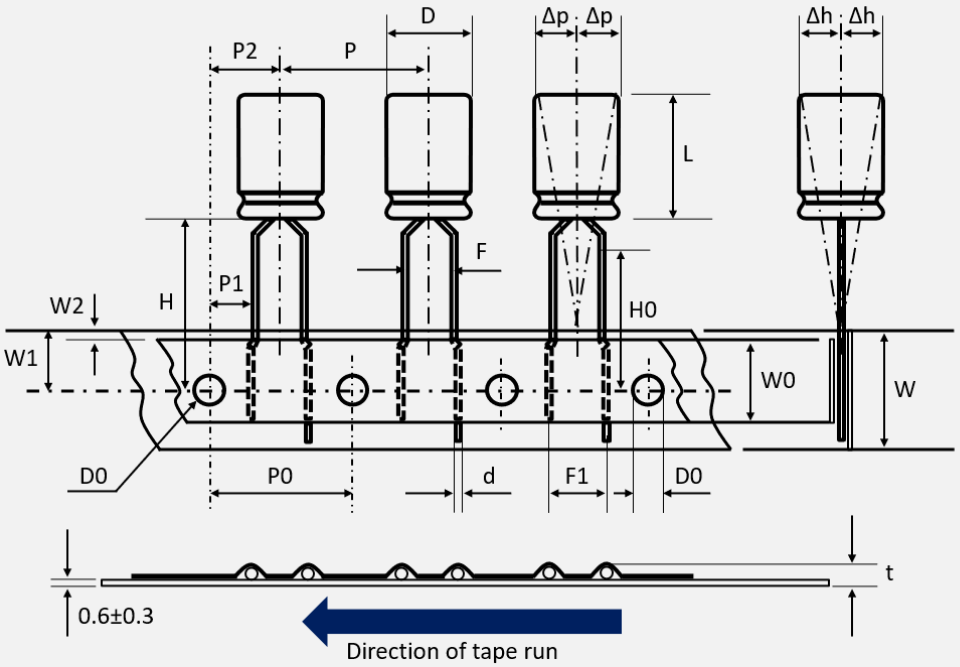

Example

P X	1 0 1	M	2 R 5	B	0 5 0	P	T B	- - - -
Series	Capacitance	Tolerance	Voltage	ØD (mm)	Height (mm)	Type code	Lead treatment	Special requirement

All dimensions in mm

	D	L	d	P	P0	P1	P2	F	W	W0	W1	W2	H	D0	Δh	Δp	t	Code
Tol	±0.5	-	±0.05	±1.0	±0.2	±0.7	±1.3	+0.4 -0.2	±0.5	±0.5	±0.5	Max	+0.75 -0.5	±0.2	Max	Max	Max	
Item	4	5 (±1) 7 (±1)	0.45	12.7	12.7	5.1	6.35	**2**	18	11	9	2	18.5	4	1	1	1.5	TB

The negative lead (cathode) is in the front, i.e. in the direction of tape run.

For further information please contact sales@capxon.org

TAPING ▪ RADIAL CONDUCTIVE POLYMER CAPACITORS ▪ AMMO PACK

Taping ▪ ØD ≥5mm ▪ standard lead space

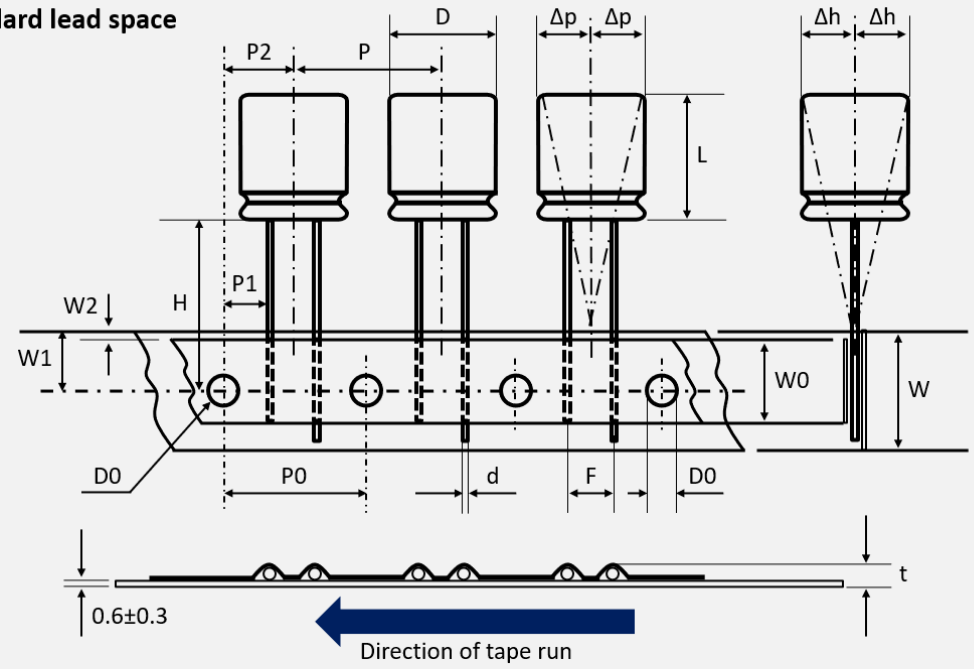

Example

P H	3 3 1	M	0 3 5	G	1 2 5	P	T A	- - - -
Series	Capacitance	Tolerance	Voltage	ØD (mm)	Height (mm)	Type code	Lead treatment	Special requirement

All dimensions in mm

	D	L	d	P	P0	P1	P2	F	W	W0	W1	W2	H	D0	Δh	Δp	t	Code
Tol	±0.5	-	±0.05	±1.0	±0.2	±0.7	±1.3	+0.4 -0.2	±0.5	±0.5	±0.5	Max	+0.75 -0.5	±0.2	Max	Max	Max	
Item	5	5 (±1)	0.45	12.7	12.7	5.35	6.35	**2**	18	11	9	2	18.5	4	1	1	1.5	TB
		7 (±1)																
		8 (±1)	0.5															
		9 (±1)																
		11 (±1)	0.6															
	6.3	5.2 (±1)	0.45	12.7	12.7	5.1	6.35	**2.5**	18	11	9	2	18.5	4	1	1	1.5	TC
		7 (±1)																
		8 (±1)	0.5															
		9 (±1)																
		11 (±1))	0.6															
	8	7 (±1)	0.6	12.7	12.7	4.6	6.35	**3.5**	18	11	9	2	18.5	4	1	1	1.5	TD
		8 (±1)																
		9 (±1.5)																
		11.5 (±1.5)																
	10	7 (±1.5)	0.6	12.7	12.7	3.85	6.35	**5**	18	11	9	2	18.5	4	1	1	1.5	TA
		8 (±1.5)																
		10 (±1.5)																
		12.5 (±1.5)																

The negative lead (cathode) is in the front, i.e. in the direction of tape run.

For further information please contact sales@capxon.org

TAPING ▪ RADIAL CONDUCTIVE POLYMER CAPACITORS ▪ AMMO PACK

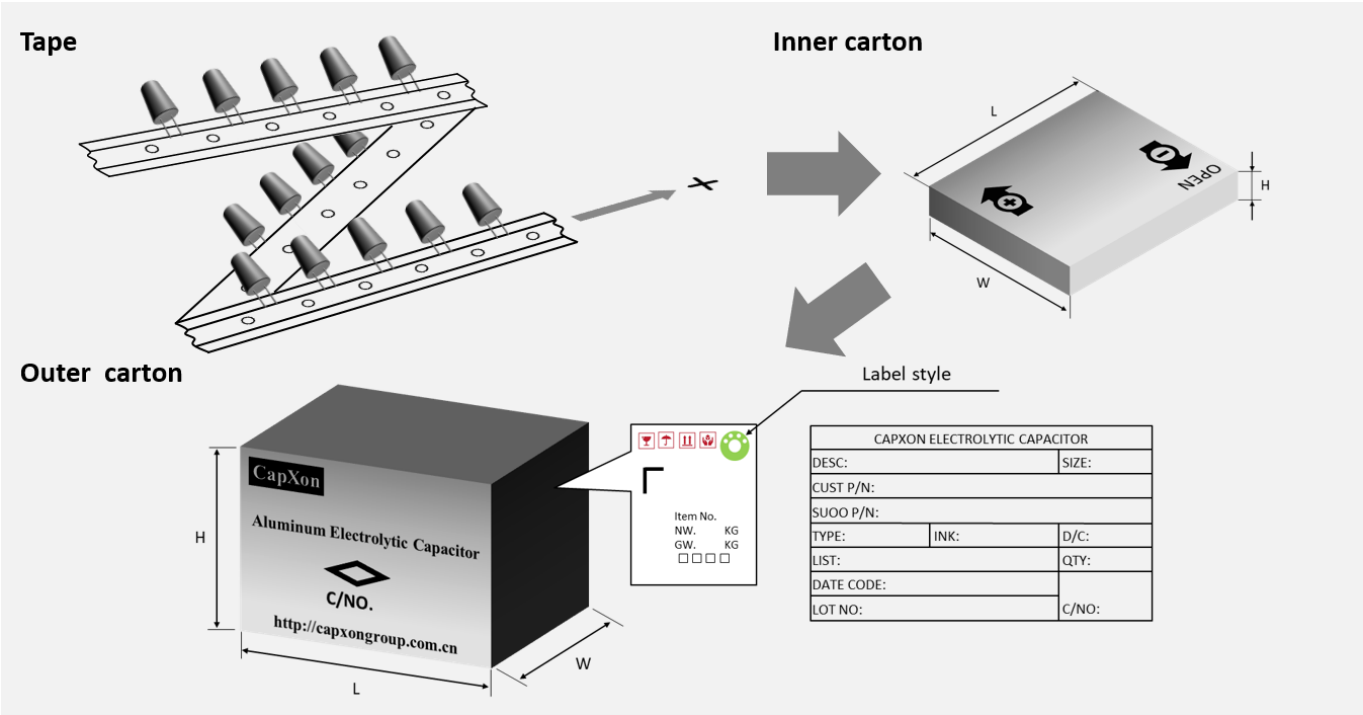

Ø D (mm)	Length L (mm)	Inner box quantity (pcs)	Inner box size L x W x H (mm)	Outer box quantity (pcs)	Outer box size L x W x H (mm)	Country of origin	Tariff number
4	5 to 7	2500	331 x 227 x 51	25000	474 x 343 x 285	China	85322200
5	5 to 11	2000	331 x 227 x 51	20000	474 x 343 x 285	China	85322200
6.3	5.2 to 11	1500	331 x 227 x 51	15000	474 x 343 x 285	China	85322200
8	7 to 11.5	800	331 x 227 x 51	8000	474 x 343 x 285	China	85322200
10	7 to 12.5	600	331 x 227 x 51	6000	474 x 343 x 285	China	85322200

For further information please contact sales@capxon.org

TAPING ▪ RADIAL CONDUCTIVE POLYMER CAPACITORS ▪ REEL PACK

Taping ▪ ØD 4mm

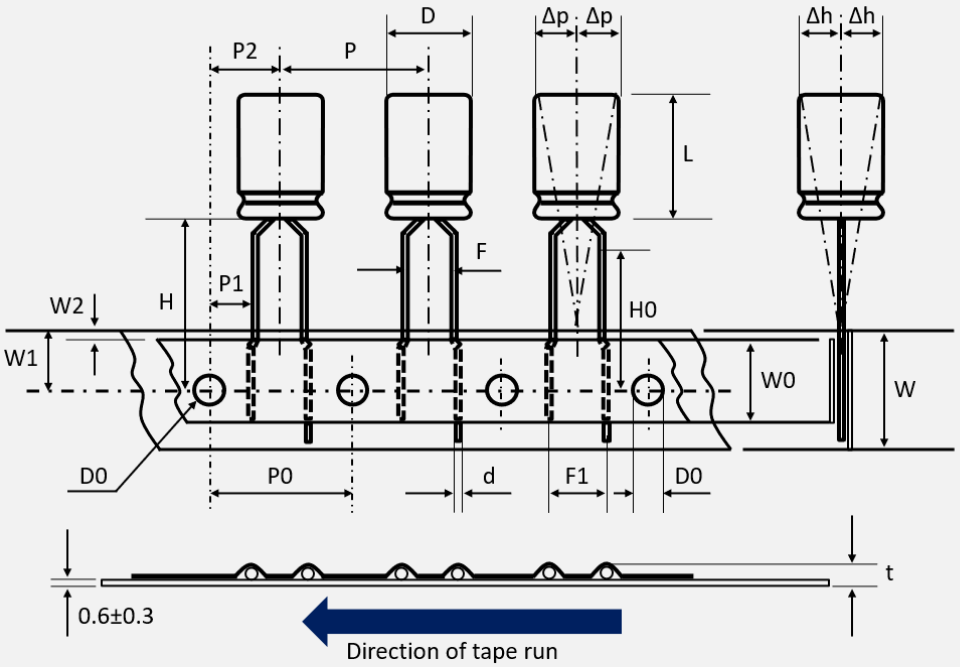

Example

P X	1 0 1	M	2 R 5	B	0 5 0	P	R B	- - - -
Series	Capacitance	Tolerance	Voltage	ØD (mm)	Height (mm)	Type code	Lead treatment	Special requirement

All dimensions in mm

	D	L	d	P	P0	P1	P2	F	W	W0	W1	W2	H	D0	Δh	Δp	t	Code
Tol	±0.5	-	±0.05	±1.0	±0.2	±0.7	±1.3	+0.4 -0.2	±0.5	±0.5	±0.5	Max	+0.75 -0.5	±0.2	Max	Max	Max	
Item	4	5 (±1) 7 (±1)	0.45	12.7	12.7	5.1	6.35	**2**	18	11	9	2	18.5	4	1	1	1.5	RB

The negative lead (cathode) is in the front, i.e. in the direction of tape run.

For further information please contact sales@capxon.org

TAPING ▪ RADIAL CONDUCTIVE POLYMER CAPACITORS ▪ REEL PACK

Taping ▪ ØD ≥5mm ▪ standard lead space

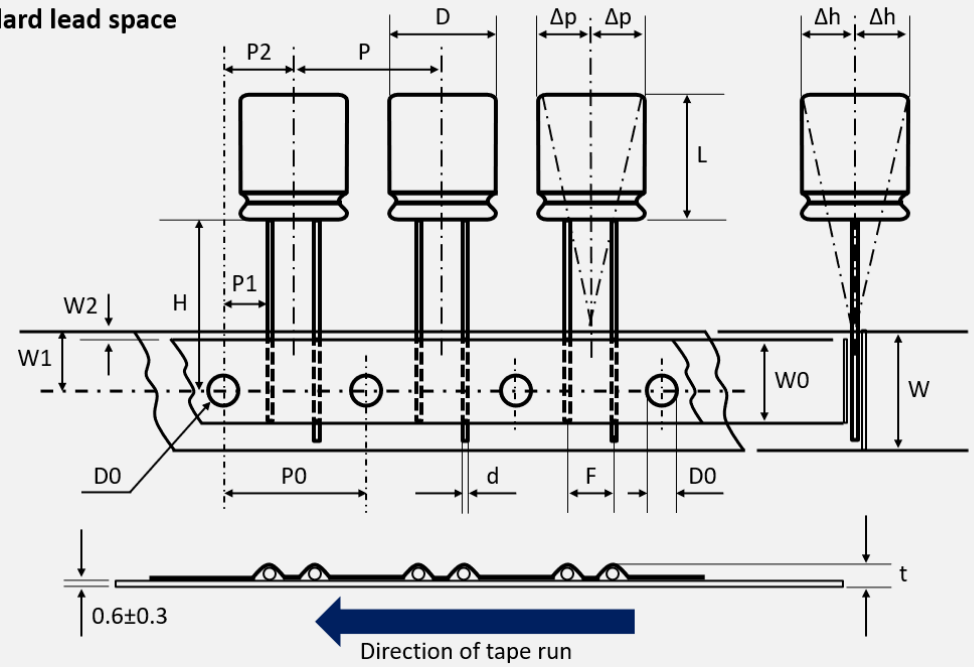

Example

P H	3 3 1	M	0 3 5	G	1 2 5	P	R A	- - - -
Series	Capacitance	Tolerance	Voltage	ØD (mm)	Height (mm)	Type code	Lead treatment	Special requirement

All dimensions in mm

	D	L	d	P	P0	P1	P2	F	W	W0	W1	W2	H	D0	Δh	Δp	t	Code
Tol	±0.5	-	±0.05	±1.0	±0.2	±0.7	±1.3	+0.4 -0.2	±0.5	±0.5	±0.5	Max	+0.75 -0.5	±0.2	Max	Max	Max	
Item	5	5 (±1)	0.45	12.7	12.7	5.35	6.35	**2**	18	11	9	2	18.5	4	1	1	1.5	RB
		7 (±1)																
		8 (±1)	0.5															
		9 (±1)	0.6															
		11 (±1)																
	6.3	5.2 (±1)	0.45	12.7	12.7	5.1	6.35	**2.5**	18	11	9	2	18.5	4	1	1	1.5	RC
		7 (±1)																
		8 (±1)	0.5															
		9 (±1)																
		11 (±1))	0.6															
	8	7 (±1)	0.6	12.7	12.7	4.6	6.35	**3.5**	18	11	9	2	18.5	4	1	1	1.5	RD
		8 (±1)																
		9 (±1.5)																
		11.5 (±1.5)																
	10	7 (±1.5)	0.6	12.7	12.7	3.85	6.35	**5**	18	11	9	2	18.5	4	1	1	1.5	RA
		8 (±1.5)																
		10 (±1.5)																
		12.5 (±1.5)																

The negative lead (cathode) is in the front, i.e. in the direction of tape run.

For further information please contact sales@capxon.org

TAPING ▪ RADIAL CONDUCTIVE POLYMER CAPACITORS ▪ REEL PACK

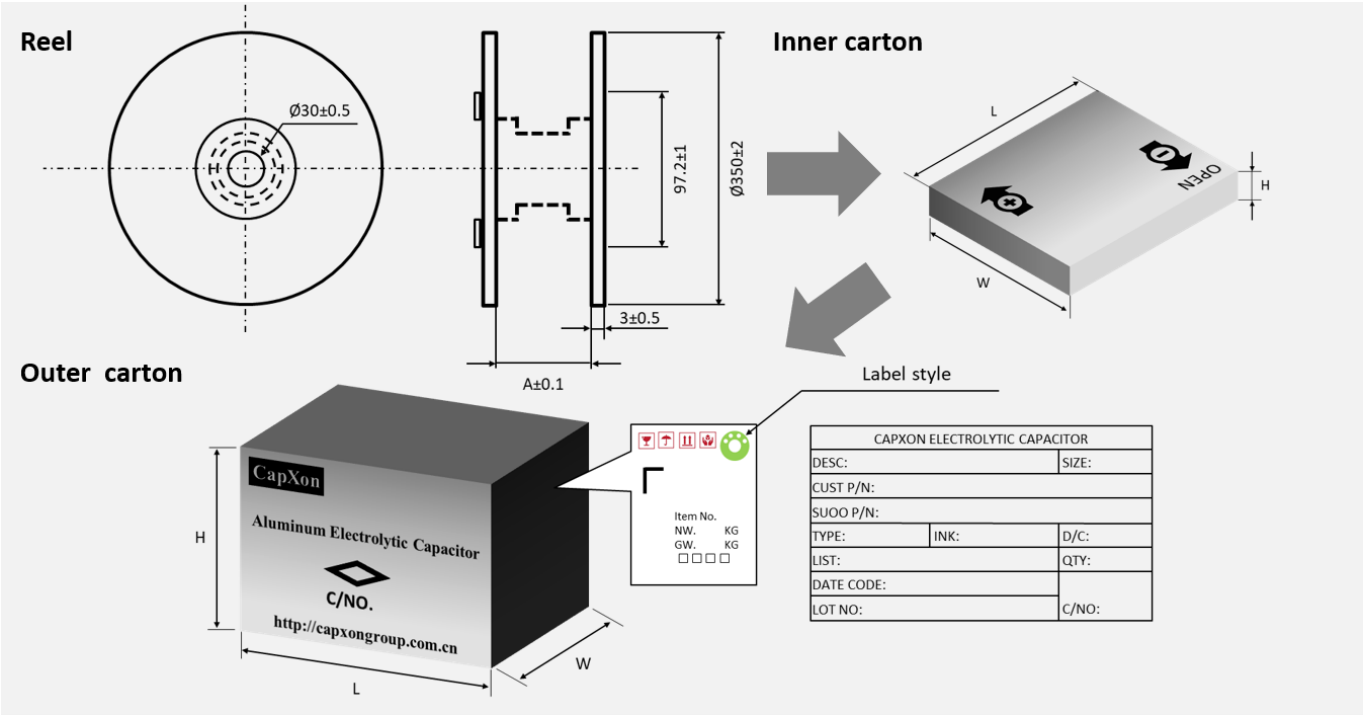

Ø D (mm)	Length L (mm)	A (mm)	Inner box quantity (pcs)	Inner box size L x W x H (mm)	Outer box quantity (pcs)	Outer box size L x W x H (mm)	Country of origin	Tariff number
4	5 to 7	45	1800	350 x 350 x 105	10800	375 x 375 x 343	China	85322200
5	5 to 11	45	1300	350 x 350 x 105	7800	375 x 375 x 343	China	85322200
6.3	5.2 to 11	45	1000	350 x 350 x 105	6000	375 x 375 x 343	China	85322200
8	7 to 11.5	45	800	350 x 350 x 105	4800	375 x 375 x 343	China	85322200
10	7 to 12.5	45	600	350 x 350 x 105	3600	375 x 375 x 343	China	85322200

PACKAGING ▪ RADIAL CONDUCTIVE POLYMER CAPACITORS
STRAIGHT LEADS ▪ BULK PACK

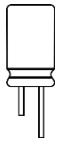

Ø D (mm)	Length L (mm)	Inner bag / Inner row (pcs)	Inner box quantity (pcs)	Inner box size L x W x H (mm)	Outer box quantity (pcs)	Outer box size L x W x H (mm)	Country of origin	Tariff number
4	5	1000/bag	1000	295 x 181 x 222	12000	295 x 181 x 222	China	85322200
	7	1000/bag	1000	295 x 181 x 222	12000	295 x 181 x 222	China	85322200
5	5	1000/bag	1000	295 x 181 x 222	12000	295 x 181 x 222	China	85322200
	7	800/bag	800	295 x 181 x 222	9600	295 x 181 x 222	China	85322200
	8	800/bag	800	295 x 181 x 222	9600	295 x 181 x 222	China	85322200
	9	700/bag	700	295 x 181 x 222	8400	295 x 181 x 222	China	85322200
	11	600/bag	600	295 x 181 x 222	7200	295 x 181 x 222	China	85322200
6.3	5.2	800/bag	800	295 x 181 x 222	9600	295 x 181 x 222	China	85322200
	6	800/bag	800	295 x 181 x 222	9600	295 x 181 x 222	China	85322200
	7	800/bag	800	295 x 181 x 222	9600	295 x 181 x 222	China	85322200
	8	600/bag	600	295 x 181 x 222	7200	295 x 181 x 222	China	85322200
	9	600/bag	600	295 x 181 x 222	7200	295 x 181 x 222	China	85322200
	11	500/bag	500	295 x 181 x 222	6000	295 x 181 x 222	China	85322200
	12	500/bag	500	295 x 181 x 222	6000	295 x 181 x 222	China	85322200
	14	500/bag	500	295 x 181 x 222	6000	295 x 181 x 222	China	85322200
8	7	500/bag	500	295 x 181 x 222	6000	295 x 181 x 222	China	85322200
	8	500/bag	500	295 x 181 x 222	6000	295 x 181 x 222	China	85322200
	9	450/bag	450	295 x 181 x 222	5400	295 x 181 x 222	China	85322200
	11.5	300/bag	300	295 x 181 x 222	3600	295 x 181 x 222	China	85322200
	20	200/bag	200	295 x 181 x 222	2400	295 x 181 x 222	China	85322200
10	7	300/bag	300	295 x 181 x 222	3600	295 x 181 x 222	China	85322200
	8	300/bag	300	295 x 181 x 222	3600	295 x 181 x 222	China	85322200
	10	300/bag	300	295 x 181 x 222	3600	295 x 181 x 222	China	85322200
	12.5	200/bag	200	295 x 181 x 222	2400	295 x 181 x 222	China	85322200
	18	200/bag	200	295 x 181 x 222	2400	295 x 181 x 222	China	85322200

PACKAGING ▪ RADIAL CONDUCTIVE POLYMER CAPACITORS
CUTTED LEADS ▪ BULK PACK

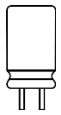

Ø D (mm)	Length L (mm)	Inner bag / Inner row (pcs)	Inner box quantity (pcs)	Cutting height (mm)	Outer box quantity (pcs)	Outer carton quantity (pcs)	Country of origin	Tariff number
4	5	1500/bag	1500/box	≤ 7	18000	18000	China	85322200
	7	1500/bag	1500/box	≤ 7	18000	18000	China	85322200
5	5	1500/bag	1500/box	≤ 7	18000	18000	China	85322200
	7	1500/bag	1500/box	≤ 7	18000	18000	China	85322200
	8	1000/bag	1000/box	≤ 7	12000	12000	China	85322200
	9	1000/bag	1000/box	≤ 7	12000	12000	China	85322200
	11	1000/bag	1000/box	≤ 7	12000	12000	China	85322200
6.3	5.2	1200/bag	1200/box	≤ 7	14400	14400	China	85322200
	7	1000/bag	1000/box	≤ 7	12000	12000	China	85322200
	8	800/bag	800/box	≤ 7	9600	9600	China	85322200
	9	800/bag	800/box	≤ 7	9600	9600	China	85322200
	11	800/bag	800/box	≤ 7	9600	9600	China	85322200
8	7	700/bag	700/box	≤ 7	8400	8400	China	85322200
	8	600/bag	600/box	≤ 7	7200	7200	China	85322200
	9	600/bag	600/box	≤ 7	7200	7200	China	85322200
	11.5	500/bag	500/box	≤ 7	6000	6000	China	85322200
10	7	500/bag	500/box	≤ 7	6000	6000	China	85322200
	8	500/bag	500/box	≤ 7	6000	6000	China	85322200
	10	400/bag	400/box	≤ 7	4800	4800	China	85322200
	12.5	300/bag	300/box	≤ 7	3600	3600	China	85322200

AVAILABLE LEAD TREATMENTS ▪ RADIAL CONDUCTIVE POLYMER CAPACITORS

Radial type ▪ standard lead spacing (all dimensions in mm)

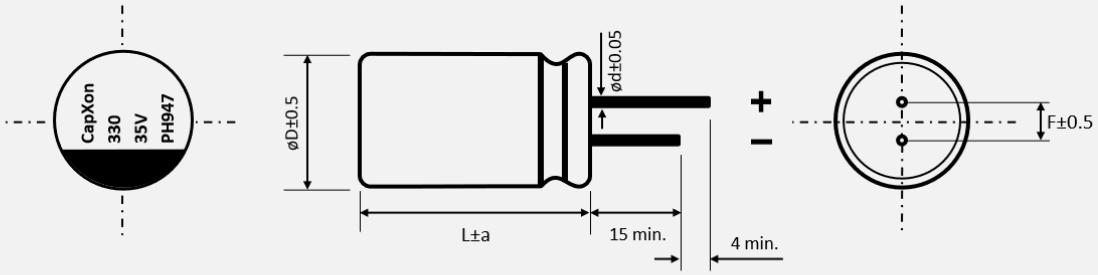

Ø D (mm)	L (mm)	a (mm)	F (mm)	Ø d (mm)
4	5	1	1.5	0.45
	7			
5	5	1	2	0.45
	7			
	8			0.5
	9			
	11			0.6
6.3	5.2	1	2.5	0.45
	7			
	8			0.5
	9			
	11			0.6
8	7	1	3.5	0.6
	8			
	9	1.5		
	11.5			
10	7	1.5	5	0.6
	8			
	10			
	12.5			

Radial type ▪ CA version ▪ cutted leads ▪ standard lead spacing

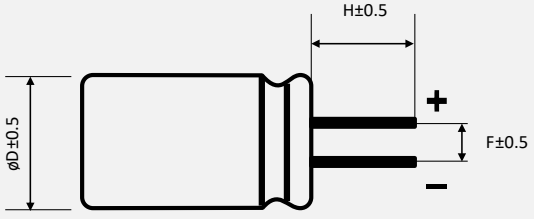

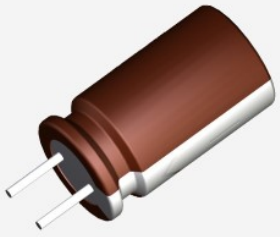

Example

Length „H" customized. See product code table customized lead length for further reference.

Ø D (mm)	4	5	6.3	8	10
F (mm)	1.5	2	2.5	3.5	5

P H	3 3 1	M	0 3 5	G	1 2 5	P	C A	- - - -
Series	Capacitance	Tolerance	Voltage	ØD (mm)	Height (mm)	Type code	Lead treatment	Special requirement

For further information please contact sales@capxon.org

PRODUCT CODE TABLE ▪ CUSTOMIZED LEAD LENGTH

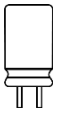

THT type example:
PH series ▪ 330µF ▪ 35V ▪ ±20% ▪ Ø 10mm ▪ L 12.5mm ▪ CA version, cutted leads ▪ P 5mm ▪ H 4.5mm

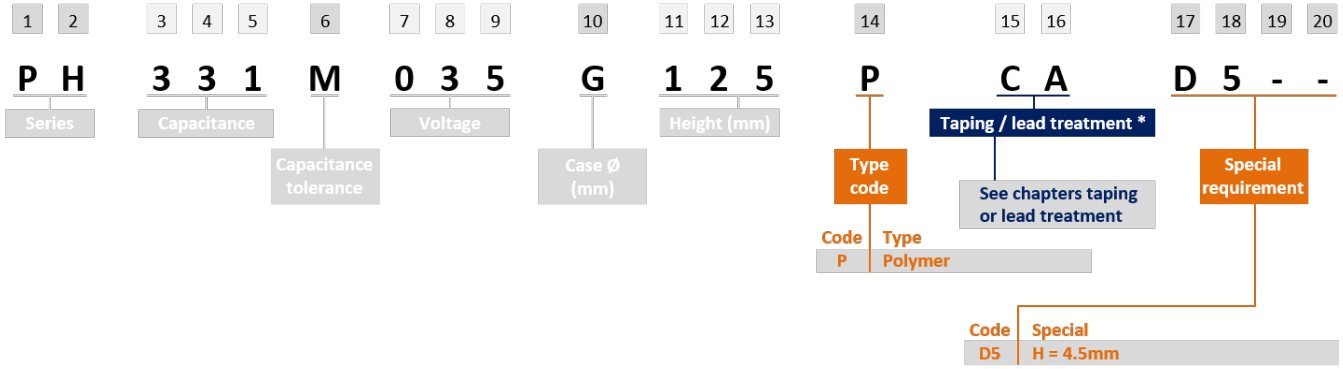

The 17th digit is according basic ordering of the Latin alphabet and shows the measure "H" in front of the decimal separator. The 18th digit follows the numbering from 0 to 9 and shows the measure "H" after the decimal separator.

Product code 17th digit	H (mm)
A	1
B	2
C	3
D	4
E	5
F	6
G	7

Product code 18st digit	H (mm)
0	0.0
1	0.1
2	0.2
3	0.3
4	0.4
5	0.5
6	0.6
7	0.7
8	0.8
9	0.9

Example H (mm)	Product code
4.0	**D0**
4.5	**D5**
5.2	**E2**
6.0	**F0**

For further information please contact sales@capxon.org

Hybrid Conductive Polymer Capacitors

SMD Types



OVERVIEW ▪ SMD HYBRID CONDUCTIVE POLYMER CAPACITORS

Features

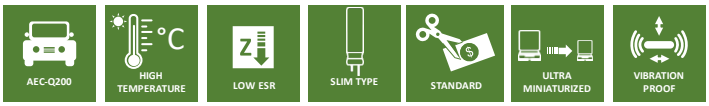

Series	Page	AEC-Q200	High Temperature	Low ESR	Slim Type	Standard	Ultra Miniaturized	Vibration Proof	Temperature Range (°C)		Voltage Range (V)		Capacitance Range (µF)		Endurance (hours)
AA	785	●		●	●	●		●	-55	+105	16	200	10	1500	5000 to 10000
AC	789	●	●	●	●			●	-55	+125	16	100	10	1500	4000
AB	793	●	●	●			●	●	-55	+125	25	35	33	470	4000
AN	796	●	●	●				●	-55	+135	16	100	10	820	4000
AR	800	●	●	●				●	-55	+145	16	80	22	560	2000
AP	803	●	●	●				●	-55	+150	16	80	22	560	1000

AA SERIES ▪ LONG LIFE UP TO 10 000 HOURS

KEY FEATURES

AEC-Q 200 · HIGH VIBRATION · HIGH VOLTAGE



- **HYBRID CONDUCTIVE POLYMER** ▪ SMD type
- Endurance: 105°C ▪ 5000 up to 10000 hours
- Low ESR and high ripple current
- Vibration Proof (VP) version (up to 30g) available
- AEC-Q200 version available

HF Halogen Free · MSL 1 · RoHS & REACH COMPLIANT

SPECIFICATIONS

Items		Performance Characteristics
Operating Temperature Range		-55 ~ +105°C
Rated Voltage Range	V_R	16 ~ 200V DC
Surge Voltage	V_S	($V_R \le 100V$): $V_S = 1.25 \cdot V_R$ ($V_R \ge 200V$): $V_S = 1.15 \cdot V_R$
Capacitance Range	C_R	10 ~ 1500µF
Cap. Tolerance	ΔC	±20% (120Hz ▪ 20°C)
Leakage Current (20°C ▪ V_R applied)	I_{LEAK}	Not to exceed the values shown in standard ratings After 2 minutes
Dissipation Factor % (20°C ▪ 120Hz)	tanδ	Not to exceed the values shown in standard ratings
Equivalent Series Resistance (20°C ▪ 100kHz)	ESR	Not to exceed the values shown in standard ratings

Lifetime Test			
Endurance 105°C (V_R & I_R applied)	Test	**10 000 hours**	≤ 100V
		5 000 hours	> 100V
	$\triangle C/C_R$	Within ±30% of the initial value	
	tanδ	Less than 200% of the specified value	
	ESR	Less than 200% of the specified value	
	I_{Leak}	Less than the specified value	

DIMENSIONS STANDARD PACKAGE ▪ All dimensions in mm

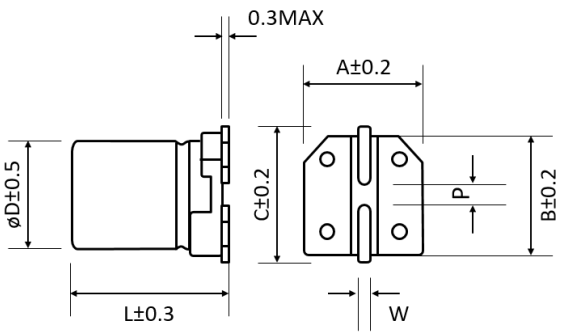

ø D	L	A	B	C	W	P±0.2
5	5.8	5.3	5.3	5.9	0.5 to 0.8	1.4
6.3	5.8	6.6	6.6	7.2	0.5 to 0.8	2.2
6.3	7.7	6.6	6.6	7.2	0.5 to 0.8	2.2
8	10.5	8.3	8.3	9.0	0.7 to 1.1	3.1
8	11.7	8.3	8.3	9.0	0.7 to 1.1	3.1
10	10.5	10.3	10.3	11.0	0.7 to 1.1	4.5
10	12.4	10.3	10.3	11.0	0.7 to 1.1	4.5
10	16.5	10.3	10.3	11.0	0.7 to 1.1	4.5

For further information please contact sales@capxon.org

DIMENSIONS VP PACKAGE (VIBRATION PROOF) ▪ All dimensions in mm

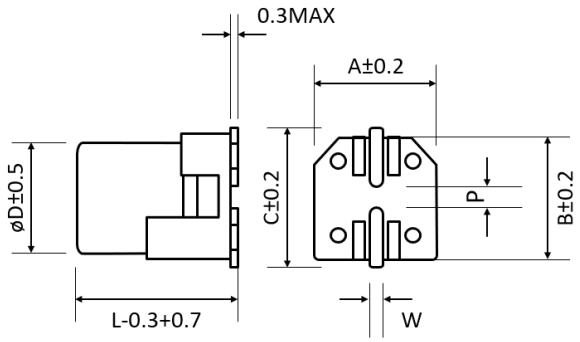

ø D	L	A	B	C	W	P±0.2
6.3	5.8	6.6	6.6	7.3	0.5 to 0.8	2.2
6.3	7.7	6.6	6.6	7.3	0.5 to 0.8	2.2
8	10.5	8.3	8.3	9.0	0.7 to 1.1	3.1
8	11.7	8.3	8.3	9.0	0.7 to 1.1	3.1
10	10.5	10.5	10.5	11.2	0.7 to 1.1	4.5
10	12.4	10.5	10.5	11.2	0.7 to 1.1	4.5
10	16.5	10.5	10.5	11.2	0.7 to 1.1	4.5

STANDARD RATINGS

Part number shows blister tape on paper reel

V_R (V)	Standard	Vibration-proof	C_R (µF)	ø D (mm)	L (mm)	I_{LEAK} (µA, 2min)	tanδ +20°C ▪ 120Hz (%)	Max. ESR +20°C ▪ 100kHz (mΩ)	I_R ▪ Max. Ripple Current +105°C ▪ 100kHz (mA rms)	CapXon Part Number
16	●	●	100	6.3	5.8	16.0	16	50	1300	AA101M016E058PTR ⬚⬚
	●	●	120	6.3	5.8	19.2	16	50	1300	AA121M016E058PTR ⬚⬚
	●	●	150	6.3	5.8	24.0	16	50	1300	AA151M016E058PTR ⬚⬚
	●	●	220	6.3	7.7	35.2	16	30	2000	AA221M016E077PTR ⬚⬚
	●	●	270	6.3	7.7	43.2	16	30	2000	AA271M016E077PTR ⬚⬚
	●	●	330	10	10.5	52.8	16	20	2500	AA331M016G105PTR ⬚⬚
	●	●	470	8	10.5	75.2	16	27	2300	AA471M016F105PTR ⬚⬚
	●	●	470	10	10.5	75.2	16	20	2500	AA471M016G105PTR ⬚⬚
	●	●	560	8	11.7	89.6	16	23	2400	AA561M016F117PTR ⬚⬚
	●	●	560	10	10.5	89.6	16	20	2500	AA561M016G105PTR ⬚⬚
	●	●	820	10	12.4	131.2	16	16	2800	AA821M016G124PTR ⬚⬚
	●	●	1500	10	16.5	240.0	16	11	5000	AA152M016G165PTR ⬚⬚
25	●		33	5	5.8	8.3	14	80	900	AA330M025C058PTR ⬚⬚
	●	●	56	6.3	5.8	14.0	14	50	1300	AA560M025E058PTR ⬚⬚
	●	●	100	6.3	7.7	25.0	14	30	2000	AA101M025E077PTR ⬚⬚
	●	●	220	8	10.5	55.0	14	27	2300	AA221M025F105PTR ⬚⬚
	●	●	270	8	11.7	67.5	14	25	2400	AA271M025F117PTR ⬚⬚
	●	●	330	10	10.5	82.5	14	20	2500	AA331M025G105PTR ⬚⬚
	●	●	470	10	12.4	117.5	14	16	2800	AA471M025G124PTR ⬚⬚
	●	●	560	10	16.5	140.0	14	11	5000	AA561M025G165PTR ⬚⬚
35	●		22	5	5.8	7.7	12	100	900	AA220M035C058PTR ⬚⬚
	●	●	27	6.3	5.8	9.5	12	60	1300	AA270M035E058PTR ⬚⬚
	●	●	47	6.3	5.8	16.5	12	60	1300	AA470M035E058PTR ⬚⬚
	●	●	68	6.3	7.7	23.8	12	35	2000	AA680M035E077PTR ⬚⬚
	●	●	100	8	10.5	35.0	12	27	2300	AA101M035F105PTR ⬚⬚
	●	●	150	8	10.5	52.5	12	27	2300	AA151M035F105PTR ⬚⬚
	●	●	180	8	11.7	63.0	12	25	2400	AA181M035F117PTR ⬚⬚
	●	●	270	10	10.5	94.5	12	20	2500	AA271M035G105PTR ⬚⬚
	●	●	330	10	12.4	115.5	12	17	2800	AA331M035G124PTR ⬚⬚
	●	●	470	10	16.5	164.5	12	11	5000	AA471M035G165PTR ⬚⬚

⬚ **see description at end of standard ratings**

STANDARD RATINGS

Part number shows blister tape on paper reel

V_R (V)	Standard	Vibration-proof	C_R (µF)	ø D (mm)	L (mm)	I_{LEAK} (µA, 2min)	tanδ +20°C ▪ 120Hz (%)	Max. ESR +20°C ▪ 100kHz (mΩ)	I_R ▪ Max. Ripple Current +105°C ▪ 100kHz (mA rms)	CapXon Part Number
50	●		10	5	5.8	5.0	10	120	750	AA100M050C058PTR □□
	●	●	22	6.3	5.8	11.0	10	80	1100	AA220M050E058PTR □□
	●	●	33	6.3	7.7	16.5	10	40	1600	AA330M050E077PTR □□
	●	●	56	10	10.5	28.0	10	28	2000	AA680M050F105PTR □□
	●	●	68	8	10.5	34.0	10	30	1800	AA820M050F117PTR □□
	●	●	82	8	11.7	41.0	10	28	1880	AA680M050G105PTR □□
	●	●	100	10	10.5	50.0	10	28	2000	AA101M050G105PTR □□
	●	●	120	10	12.4	60.0	10	25	2200	AA121M050G124PTR □□
	●	●	220	10	16.5	110.0	10	13	4600	AA221M050G165PTR □□
63	●	●	10	6.3	5.8	6.3	8	120	1000	AA100M063E058PTR □□
	●	●	22	6.3	7.7	13.9	8	80	1500	AA220M063E077PTR □□
	●	●	33	8	10.5	20.8	8	40	1700	AA330M063F105PTR □□
	●	●	47	8	10.5	29.6	8	40	1700	AA470M063F105PTR □□
	●	●	47	8	11.7	29.6	8	38	1750	AA470M063F117PTR □□
	●	●	56	10	10.5	35.3	8	30	1800	AA560M063G105PTR □□
	●	●	68	10	10.5	42.8	8	30	1800	AA680M063G105PTR □□
	●	●	82	10	12.4	51.7	8	22	2100	AA820M063G124PTR □□
	●	●	150	10	16.5	94.5	8	15	4350	AA151M063G165PTR □□
80	●	●	22	8	10.5	17.6	8	45	1550	AA220M080F105PTR □□
	●	●	27	8	11.7	21.6	8	43	1600	AA270M080F117PTR □□
	●	●	33	10	10.5	26.4	8	36	1700	AA330M080G105PTR □□
	●	●	47	10	10.5	37.6	8	36	1700	AA470M080G105PTR □□
	●	●	56	10	12.4	44.8	8	32	1800	AA560M080G124PTR □□
100	●	●	22	8	10.5	22.0	8	55	1400	AA220M100F105PTR □□
	●	●	22	8	11.7	22.0	8	52	1450	AA220M100F117PTR □□
	●	●	22	10	10.5	22.0	8	45	1500	AA220M100G105PTR □□
	●	●	27	10	12.4	27.0	8	40	1600	AA270M100G124PTR □□
	●	●	33	10	12.4	33.0	8	40	1600	AA330M100G124PTR □□
200	●	●	10	10	12.4	20.0	12	100	800	AA100M200G124PTR □□

□□: Leave **blank** for Standard package
□□: Enter **W** for Vibration proof version
□□: Enter **X** for AEC-Q200
□□: Enter **XW** for AEC-Q200 and Vibration Proof version

MULTIPLIER K_f for RIPPLE CURRENT vs. FREQUENCY

Frequency (Hz)	120 ≤ Freq. < 1k	1k ≤ Freq. < 10k	10k ≤ Freq. < 100k	100k ≤ Freq. < 300k
Coefficient K_f	0.1	0.3	0.6	1

For further information please contact sales@capxon.org

PRECAUTIONS, GUIDELINES AND PACKAGING INFORMATON

Unless otherwise agreed in individual specifications, all products are subject to our “General Precautions and Guidelines” as well as our “Packaging Information”. Please refer to the following links in the table.

General Precautions and Guidelines	Packaging Information Hybrid SMD
Page 837	Page 806

DISCLAIMER

All product related data (e.g. specification, statements and general information) are subject to change without any notice. It is necessary that the customer observes all product related technical / application information and handling instructions.

CapXon products are designed and manufactured according to severe quality and safety standards. Under no circumstance, CapXon warrants that any CapXon product is suitable for the purposes intended for your application, even CapXon knows the application. It is customer's duty and obligation to check and make sure that CapXon products are suitable for the purposes intended and select the correct and proper CapXon product. Customers are requested to perform a sufficient validation and reliability evaluation to assure needed safety level and reliability performance by suitable designs and to apply proper safeguards (e.g. redundancies, protective circuits).

Particular operating conditions (ambient temperature, ripple current, voltage, thermal resistance, etc.) as well as storage, production or assembly may affect the performance and the lifetime of the capacitor. Please consult CapXon for lifetime estimation, failure mode considerations or worst-case scenarios according to the product technology, product tolerances / deviations or change of the characteristics of the capacitor due to shipment, storage, handling, production and usage.

For aerospace or military application, life-saving, life-sustaining, safety critical applications or any application where failure may cause severe personal injury or death, please consult us before design-in the capacitor in your application.

Except for the written expressed warranties, CapXon does not impliedly, by assumption or whatever else, warrant, undertake, promise any other warranty or guaranty for any CapXon product.

For further information, please visit our website www.capxongroup.com or contact CapXon directly.

AC SERIES ▪ LONG LIFE AT 125°C

KEY FEATURES

AEC-Q 200 · HIGH VIBRATION · °C HIGH TEMPERATURE



- **HYBRID CONDUCTIVE POLYMER** ▪ SMD type
- Endurance: 125°C ▪ 4000 hours
- Low ESR and high ripple current
- Vibration Proof (VP) version (up to 30g) available
- AEC-Q200 version available

HF Halogen Free · MSL 1 · RoHS & REACH COMPLIANT

SPECIFICATIONS

Items		Performance Characteristics
Operating Temperature Range		-55 ~ +125°C
Rated Voltage Range	V_R	16 ~ 100V DC
Surge Voltage	V_S	($V_R \le 100V$): $V_S = 1.25 \cdot V_R$
Capacitance Range	C_R	10 ~ 1500µF
Cap. Tolerance	ΔC	±20% (120Hz ▪ 20°C)
Leakage Current (20°C ▪ V_R applied)	I_{LEAK}	Not to exceed the values shown in standard ratings After 2 minutes
Dissipation Factor % (20°C ▪ 120Hz)	tanδ	Not to exceed the values shown in standard ratings
Equivalent Series Resistance (20°C ▪ 100kHz)	ESR	Not to exceed the values shown in standard ratings

Lifetime Test		
Endurance 125°C (V_R & I_R applied)	Test	**4000 hours**
	△C/C_R	Within ±30% of the initial value
	tanδ	Less than 200% of the specified value
	ESR	Less than 200% of the specified value
	I_{Leak}	Less than the specified value

DIMENSIONS STANDARD PACKAGE ▪ All dimensions in mm

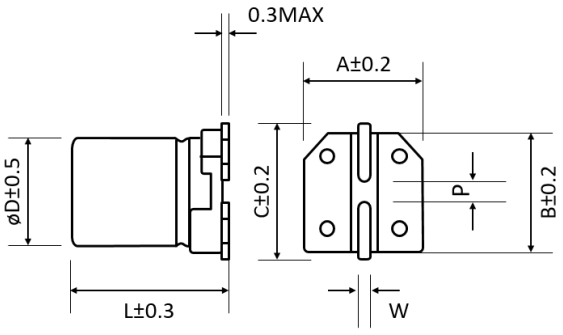

ø D	L	A	B	C	W	P±0.2
5	5.8	5.3	5.3	5.9	0.5 to 0.8	1.4
6.3	5.8	6.6	6.6	7.2	0.5 to 0.8	2.2
6.3	7.7	6.6	6.6	7.2	0.5 to 0.8	2.2
8	10.5	8.3	8.3	9.0	0.7 to 1.1	3.1
8	11.7	8.3	8.3	9.0	0.7 to 1.1	3.1
10	10.5	10.3	10.3	11.0	0.7 to 1.1	4.5
10	12.4	10.3	10.3	11.0	0.7 to 1.1	4.5
10	16.5	10.3	10.3	11.0	0.7 to 1.1	4.5

For further information please contact sales@capxon.org

DIMENSIONS VP PACKAGE (VIBRATION PROOF) ▪ All dimensions in mm

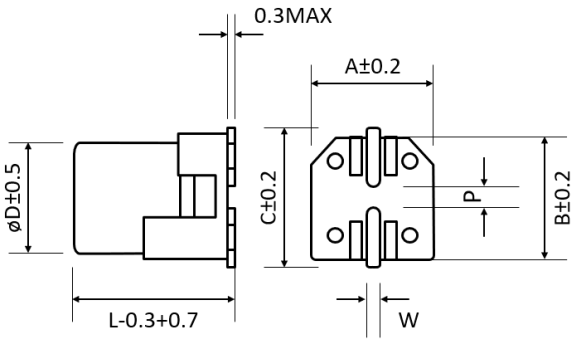

ø D	L	A	B	C	W	P±0.2
6.3	5.8	6.6	6.6	7.3	0.5 to 0.8	2.2
6.3	7.7	6.6	6.6	7.3	0.5 to 0.8	2.2
8	10.5	8.3	8.3	9.0	0.7 to 1.1	3.1
8	11.7	8.3	8.3	9.0	0.7 to 1.1	3.1
10	10.5	10.5	10.5	11.2	0.7 to 1.1	4.5
10	12.4	10.5	10.5	11.2	0.7 to 1.1	4.5
10	16.5	10.5	10.5	11.2	0.7 to 1.1	4.5

STANDARD RATINGS

Part number shows blister tape on paper reel

V_R (V)	Standard	Vibration-proof	C_R (µF)	ø D (mm)	L (mm)	I_{LEAK} (µA, 2min)	tanδ +20°C ▪ 120Hz (%)	Max. ESR +20°C ▪ 100kHz (mΩ)	I_R ▪ Max. Ripple Current +125°C ▪ 100kHz (mA rms)	CapXon Part Number
16	●	●	100	6.3	5.8	16.0	16	50	900	AC101M016E058PTR ⛶
	●	●	120	6.3	5.8	19.2	16	50	900	AC121M016E058PTR ⛶
	●	●	150	6.3	5.8	24.0	16	50	900	AC151M016E058PTR ⛶
	●	●	220	6.3	7.7	35.2	16	30	1400	AC221M016E077PTR ⛶
	●	●	270	6.3	7.7	43.2	16	30	1700	AC271M016E077PTR ⛶
	●	●	330	10	10.5	52.8	16	20	2000	AC331M016G105PTR ⛶
	●	●	470	8	10.5	75.2	16	27	1600	AC471M016F105PTR ⛶
	●	●	470	10	10.5	75.2	16	20	2000	AC471M016G105PTR ⛶
	●	●	560	8	11.7	89.6	16	23	1650	AC561M016F117PTR ⛶
	●	●	560	10	10.5	89.6	16	20	2000	AC561M016G105PTR ⛶
	●	●	820	10	12.4	131.2	16	16	2260	AC821M016G124PTR ⛶
	●	●	1500	10	16.5	240.0	16	11	4000	AC152M016G165PTR ⛶
25	●		33	5	5.8	8.3	14	80	550	AC330M025C058PTR ⛶
	●	●	56	6.3	5.8	14.0	14	50	900	AC560M025E058PTR ⛶
	●	●	100	6.3	7.7	25.0	14	30	1400	AC101M025E077PTR ⛶
	●	●	220	8	10.5	55.0	14	27	1600	AC221M025F105PTR ⛶
	●	●	270	8	11.7	67.5	14	25	1650	AC271M025F117PTR ⛶
	●	●	330	10	10.5	82.5	14	20	2000	AC331M025G105PTR ⛶
	●	●	470	10	12.4	117.5	14	16	2260	AC471M025G124PTR ⛶
	●	●	560	10	16.5	140.0	14	11	4000	AC561M025G165PTR ⛶
35	●		22	5	5.8	7.7	12	100	550	AC220M035C058PTR ⛶
	●	●	47	6.3	5.8	16.5	12	60	900	AC470M035E058PTR ⛶
	●	●	68	6.3	7.7	23.8	12	35	1400	AC680M035E077PTR ⛶
	●	●	100	8	10.5	35.0	12	27	1600	AC101M035F105PTR ⛶
	●	●	150	8	10.5	52.5	12	27	1600	AC151M035F105PTR ⛶
	●	●	180	8	11.7	63.0	12	25	1650	AC181M035F117PTR ⛶
	●	●	270	10	10.5	94.5	12	20	2000	AC271M035G105PTR ⛶
	●	●	330	10	12.4	115.5	12	17	2260	AC331M035G124PTR ⛶
	●	●	470	10	16.5	164.5	12	11	4000	AC471M035G165PTR ⛶

⛶ **see description at end of standard ratings**

For further information please contact sales@capxon.org

STANDARD RATINGS

Part number shows blister tape on reel version

V_R (V)	Standard	Vibration-proof	C_R (µF)	ø D (mm)	L (mm)	I_{LEAK} (µA, 2min)	tanδ +20°C ▪ 120Hz (%)	Max. ESR +20°C ▪ 100kHz (mΩ)	I_R ▪ Max. Ripple Current +125°C ▪ 100kHz (mA rms)	CapXon Part Number
50	●		10	5	5.8	5.0	10	120	500	AC100M050C058PTR ☐☐☐
	●	●	22	6.3	5.8	11.0	10	80	750	AC220M050E058PTR ☐☐☐
	●	●	33	6.3	7.7	16.5	10	40	1100	AC330M050E077PTR ☐☐☐
	●	●	56	10	10.5	28.0	10	28	1600	AC560M050G105PTR ☐☐☐
	●	●	68	8	10.5	34.0	10	30	1250	AC680M050F105PTR ☐☐☐
	●	●	82	8	11.7	41.0	10	28	1300	AC820M050F117PTR ☐☐☐
	●	●	100	10	10.5	50.0	10	28	1600	AC101M050G105PTR ☐☐☐
	●	●	120	10	10.5	60.0	10	28	1600	AC121M050G105PTR ☐☐☐
	●	●	120	10	12.4	60.0	10	25	1750	AC121M050G124PTR ☐☐☐
	●	●	220	10	16.5	110.0	10	13	3700	AC221M050G165PTR ☐☐☐
63	●	●	10	6.3	5.8	6.3	8	120	700	AC100M063E058PTR ☐☐☐
	●	●	22	6.3	7.7	13.9	8	80	900	AC220M063E077PTR ☐☐☐
	●	●	33	8	10.5	20.8	8	40	1100	AC330M063F105PTR ☐☐☐
	●	●	47	8	10.5	29.6	8	40	1100	AC470M063F105PTR ☐☐☐
	●	●	47	8	11.7	29.6	8	38	1130	AC470M063F117PTR ☐☐☐
	●	●	56	10	10.5	35.3	8	30	1400	AC560M063G105PTR ☐☐☐
	●	●	68	10	10.5	42.8	8	30	1400	AC680M063G105PTR ☐☐☐
	●	●	82	10	12.4	51.7	8	22	1650	AC820M063G124PTR ☐☐☐
	●	●	150	10	16.5	94.5	8	15	3500	AC151M063G165PTR ☐☐☐
80	●	●	22	8	10.5	17.6	8	45	1050	AC220M080F105PTR ☐☐☐
	●	●	27	8	11.7	21.6	8	43	1080	AC270M080F117PTR ☐☐☐
	●	●	33	10	10.5	26.4	8	36	1360	AC330M080G105PTR ☐☐☐
	●	●	47	10	10.5	37.6	8	36	1360	AC470M080G105PTR ☐☐☐
	●	●	56	10	12.4	44.8	8	35	1440	AC560M080G124PTR ☐☐☐
	●	●	68	10	12.4	54.4	8	32	1540	AC680M080G124PTR ☐☐☐
100	●	●	22	8	10.5	22.0	8	55	950	AC220M100F105PTR ☐☐☐
	●	●	22	8	11.7	22.0	8	52	980	AC220M100F117PTR ☐☐☐
	●	●	22	10	10.5	22.0	8	45	1200	AC220M100G105PTR ☐☐☐
	●	●	27	10	12.4	27.0	8	40	1360	AC270M100G124PTR ☐☐☐
	●	●	33	10	12.4	33.0	8	40	1360	AC330M100G124PTR ☐☐☐

☐☐☐: Leave **blank** for Standard package
☐☐☐: Enter **W** for Vibration proof version
☐☐☐: Enter **X** for AEC-Q200
☐☐☐: Enter **XW** for AEC-Q200 and Vibration proof version

MULTIPLIER K_f for RIPPLE CURRENT vs. FREQUENCY

Frequency (Hz)	120 ≤ Freq. < 1k	1k ≤ Freq. < 10k	10k ≤ Freq. < 100k	100k ≤ Freq. < 300k
Coefficient K_f	0.1	0.3	0.6	1

For further information please contact sales@capxon.org

PRECAUTIONS, GUIDELINES AND PACKAGING INFORMATON

Unless otherwise agreed in individual specifications, all products are subject to our “General Precautions and Guidelines” as well as our “Packaging Information”. Please refer to the following links in the table.

General Precautions and Guidelines	Packaging Information Hybrid SMD
Page 837	Page 806

DISCLAIMER

All product related data (e.g. specification, statements and general information) are subject to change without any notice. It is necessary that the customer observes all product related technical / application information and handling instructions.

CapXon products are designed and manufactured according to severe quality and safety standards. Under no circumstance, CapXon warrants that any CapXon product is suitable for the purposes intended for your application, even CapXon knows the application. It is customer's duty and obligation to check and make sure that CapXon products are suitable for the purposes intended and select the correct and proper CapXon product. Customers are requested to perform a sufficient validation and reliability evaluation to assure needed safety level and reliability performance by suitable designs and to apply proper safeguards (e.g. redundancies, protective circuits).

Particular operating conditions (ambient temperature, ripple current, voltage, thermal resistance, etc.) as well as storage, production or assembly may affect the performance and the lifetime of the capacitor. Please consult CapXon for lifetime estimation, failure mode considerations or worst-case scenarios according to the product technology, product tolerances / deviations or change of the characteristics of the capacitor due to shipment, storage, handling, production and usage.

For aerospace or military application, life-saving, life-sustaining, safety critical applications or any application where failure may cause severe personal injury or death, please consult us before design-in the capacitor in your application.

Except for the written expressed warranties, CapXon does not impliedly, by assumption or whatever else, warrant, undertake, promise any other warranty or guaranty for any CapXon product.

For further information, please visit our website www.capxongroup.com or contact CapXon directly.

AB SERIES ▪ MINIATURIZED HIGH RIPPLE CURRENT TYPE

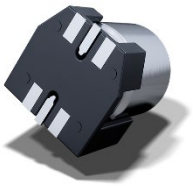

KEY FEATURES

AEC-Q 200 · HIGH VIBRATION · HIGH TEMPERATURE · MINIATURIZED



- **HYBRID CONDUCTIVE POLYMER** ▪ SMD type
- Endurance: 125°C ▪ 4000 hours
- Low ESR and **extremely** high ripple current in small dimensions
- Vibration Proof (VP) version (up to 30g) available
- AEC-Q200 version available

HF Halogen Free · MSL 1 · RoHS & REACH COMPLIANT

SPECIFICATIONS

Items		Performance Characteristics
Operating Temperature Range		-55 ~ +125°C
Rated Voltage Range	V_R	25 ~ 35V DC
Surge Voltage	V_S	($V_R \le 100V$): $V_S = 1.25 \cdot V_R$
Capacitance Range	C_R	33 ~ 680µF
Cap. Tolerance	ΔC	±20% (120Hz ▪ 20°C)
Leakage Current (20°C ▪ V_R applied)	I_{LEAK}	Not to exceed the values shown in standard ratings After 2 minutes
Dissipation Factor % (20°C ▪ 120Hz)	tanδ	Not to exceed the values shown in standard ratings
Equivalent Series Resistance (20°C ▪ 100kHz)	ESR	Not to exceed the values shown in standard ratings

Lifetime Test		
Endurance 125°C (V_R & I_R applied)	Test	**4000 hours**
	$\triangle C/C_R$	Within ±30% of the initial value
	tanδ	Less than 200% of the specified value
	ESR	Less than 200% of the specified value
	I_{Leak}	Less than the specified value

DIMENSIONS STANDARD PACKAGE ▪ All dimensions in mm

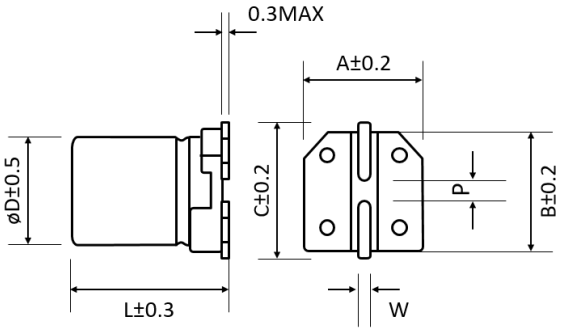

ø D	L	A	B	C	W	P±0.2
5	5.8	5.3	5.3	5.9	0.5 to 0.8	1.4
6.3	5.8	6.6	6.6	7.2	0.5 to 0.8	2.2
6.3	7.7	6.6	6.6	7.2	0.5 to 0.8	2.2
8	10.5	8.3	8.3	9.0	0.7 to 1.1	3.1
10	10.5	10.3	10.3	11.0	0.7 to 1.1	4.5
10	12.4	10.3	10.3	11.0	0.7 to 1.1	4.5

For further information please contact sales@capxon.org

DIMENSIONS VP PACKAGE (VIBRATION PROOF) ▪ All dimensions in mm

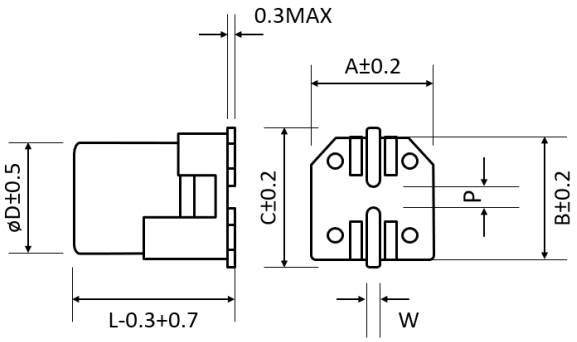

ø D	L	A	B	C	W	P±0.2
6.3	5.8	6.6	6.6	7.3	0.5 to 0.8	2.2
6.3	7.7	6.6	6.6	7.3	0.5 to 0.8	2.2
8	10.5	8.3	8.3	9.0	0.7 to 1.1	3.1
10	10.5	10.5	10.5	11.2	0.7 to 1.1	4.5
10	12.4	10.5	10.5	11.2	0.7 to 1.1	4.5

STANDARD RATINGS

Part number shows blister tape on paper reel

V_R (V)	Standard	Vibration-proof	C_R (µF)	ø D (mm)	L (mm)	I_{LEAK} (µA, 2min)	tanδ +20°C ▪ 120Hz (%)	Max. ESR +20°C ▪ 100kHz (mΩ)	I_R ▪ Max. Ripple Current +125°C ▪ 100kHz (mA rms)	CapXon Part Number
25	●		47	5	5.8	11.8	14	80	850	AB470M025C058PTR ☐☐☐
	●		56	5	5.8	14.0	14	80	850	AB560M025C058PTR ☐☐☐
	●	●	68	6.3	5.8	17.0	14	50	1300	AB680M025E058PTR ☐☐☐
	●	●	82	6.3	5.8	20.5	14	50	1300	AB820M025E058PTR ☐☐☐
	●	●	100	6.3	5.8	25.0	14	50	1300	AB101M025E058PTR ☐☐☐
	●	●	150	6.3	7.7	37.5	14	30	1800	AB151M025E077PTR ☐☐☐
	●	●	180	6.3	7.7	45.0	14	30	1800	AB181M025E077PTR ☐☐☐
	●	●	270	8	10.5	67.5	14	27	2000	AB271M025F105PTR ☐☐☐
	●	●	330	8	10.5	82.5	14	27	2000	AB331M025F105PTR ☐☐☐
	●	●	470	10	10.5	117.5	14	20	2800	AB471M025G105PTR ☐☐☐
	●	●	560	10	10.5	140.0	14	20	2800	AB561M025G105PTR ☐☐☐
	●	●	680	10	12.4	170.0	14	16	3160	AB681M025G124PTR ☐☐☐
35	●		33	5	5.8	11.5	12	100	750	AB330M035C058PTR ☐☐☐
	●		39	5	5.8	13.7	12	100	750	AB390M035C058PTR ☐☐☐
	●	●	56	6.3	5.8	19.6	12	60	1200	AB560M035E058PTR ☐☐☐
	●	●	68	6.3	5.8	23.8	12	60	1200	AB680M035E058PTR ☐☐☐
	●	●	100	6.3	7.7	35.0	12	35	1700	AB101M035E077PTR ☐☐☐
	●	●	120	6.3	7.7	42.0	12	35	1700	AB121M035E077PTR ☐☐☐
	●	●	180	8	10.5	63.0	12	27	2000	AB181M035F105PTR ☐☐☐
	●	●	220	8	10.5	77.0	12	27	2000	AB221M035F105PTR ☐☐☐
	●	●	330	10	10.5	115.5	12	20	2800	AB331M035G105PTR ☐☐☐
	●	●	390	10	10.5	136.5	12	20	2800	AB391M035G105PTR ☐☐☐

☐☐☐: Leave **blank** for Standard package
☐☐☐: Enter **W** for Vibration proof version
☐☐☐: Enter **X** for AEC-Q200
☐☐☐: Enter **XW** for AEC-Q200 and Vibration proof version

For further information please contact sales@capxon.org

MULTIPLIER K_f for RIPPLE CURRENT vs. FREQUENCY

Frequency (Hz)	120 ≤ Freq. < 1k	1k ≤ Freq. < 10k	10k ≤ Freq. < 100k	100k ≤ Freq. < 300k
Coefficient K_f	0.1	0.3	0.6	1

PRECAUTIONS, GUIDELINES AND PACKAGING INFORMATON

Unless otherwise agreed in individual specifications, all products are subject to our “General Precautions and Guidelines” as well as our “Packaging Information”. Please refer to the following links in the table.

General Precautions and Guidelines	Packaging Information Hybrid SMD
Page 837	Page 806

DISCLAIMER

All product related data (e.g. specification, statements and general information) are subject to change without any notice. It is necessary that the customer observes all product related technical / application information and handling instructions.

CapXon products are designed and manufactured according to severe quality and safety standards. Under no circumstance, CapXon warrants that any CapXon product is suitable for the purposes intended for your application, even CapXon knows the application. It is customer's duty and obligation to check and make sure that CapXon products are suitable for the purposes intended and select the correct and proper CapXon product. Customers are requested to perform a sufficient validation and reliability evaluation to assure needed safety level and reliability performance by suitable designs and to apply proper safeguards (e.g. redundancies, protective circuits).

Particular operating conditions (ambient temperature, ripple current, voltage, thermal resistance, etc.) as well as storage, production or assembly may affect the performance and the lifetime of the capacitor. Please consult CapXon for lifetime estimation, failure mode considerations or worst-case scenarios according to the product technology, product tolerances / deviations or change of the characteristics of the capacitor due to shipment, storage, handling, production and usage.

For aerospace or military application, life-saving, life-sustaining, safety critical applications or any application where failure may cause severe personal injury or death, please consult us before design-in the capacitor in your application.

Except for the written expressed warranties, CapXon does not impliedly, by assumption or whatever else, warrant, undertake, promise any other warranty or guaranty for any CapXon product.

For further information, please visit our website www.capxongroup.com or contact CapXon directly.

AN SERIES ▪ LONG LIFE AT 135°C

KEY FEATURES

AEC-Q 200 · HIGH VIBRATION · HIGH TEMPERATURE



- **HYBRID CONDUCTIVE POLYMER** ▪ SMD type
- Endurance: 135°C ▪ 4000 hours
- Low ESR and high ripple current
- Vibration Proof (VP) version (up to 30g) available
- AEC-Q200 version available

HF Halogen Free · MSL 1 · RoHS & REACH COMPLIANT

SPECIFICATIONS

Items		Performance Characteristics
Operating Temperature Range		-55 ~ +135°C
Rated Voltage Range	V_R	16 ~ 100V DC
Surge Voltage	V_S	($V_R \le 100V$): $V_S = 1.25 \cdot V_R$
Capacitance Range	C_R	10 ~ 820µF
Cap. Tolerance	ΔC	±20% (120Hz ▪ 20°C)
Leakage Current (20°C ▪ V_R applied)	I_{LEAK}	Not to exceed the values shown in standard ratings After 2 minutes
Dissipation Factor % (20°C ▪ 120Hz)	tanδ	Not to exceed the values shown in standard ratings
Equivalent Series Resistance (20°C ▪ 100kHz)	ESR	Not to exceed the values shown in standard ratings

Lifetime Test		
Endurance 135°C (V_R & I_R applied)	Test	**4000 hours**
	△C/C_R	Within ±30% of the initial value
	tanδ	Less than 200% of the specified value
	ESR	Less than 200% of the specified value
	I_{Leak}	Less than the specified value

DIMENSIONS STANDARD PACKAGE ▪ All dimensions in mm

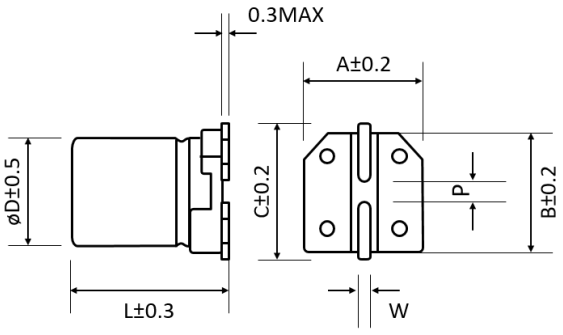

ø D	L	A	B	C	W	P±0.2
5	5.8	5.3	5.3	5.9	0.5 to 0.8	1.4
6.3	5.8	6.6	6.6	7.2	0.5 to 0.8	2.2
6.3	7.7	6.6	6.6	7.2	0.5 to 0.8	2.2
8	10.5	8.3	8.3	9.0	0.7 to 1.1	3.1
8	11.7	8.3	8.3	9.0	0.7 to 1.1	3.1
10	10.5	10.3	10.3	11.0	0.7 to 1.1	4.5
10	12.4	10.3	10.3	11.0	0.7 to 1.1	4.5

For further information please contact sales@capxon.org

DIMENSIONS VP PACKAGE (VIBRATION PROOF) ▪ All dimensions in mm

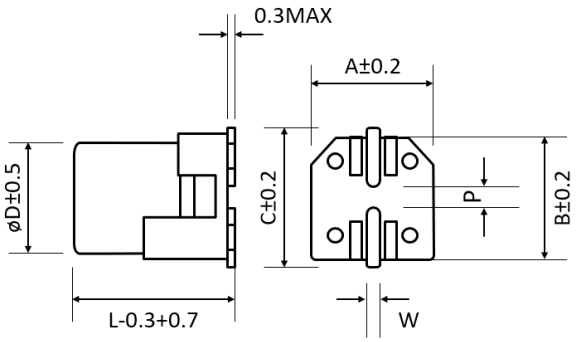

ø D	L	A	B	C	W	P±0.2
6.3	5.8	6.6	6.6	7.3	0.5 to 0.8	2.2
6.3	7.7	6.6	6.6	7.3	0.5 to 0.8	2.2
8	10.5	8.3	8.3	9.0	0.7 to 1.1	3.1
8	11.7	8.3	8.3	9.0	0.7 to 1.1	3.1
10	10.5	10.5	10.5	11.2	0.7 to 1.1	4.5
10	12.4	10.5	10.5	11.2	0.7 to 1.1	4.5

STANDARD RATINGS

Part number shows blister tape on paper reel

V_R (V)	Standard	Vibration-proof	C_R (µF)	ø D (mm)	L (mm)	I_{LEAK} (µA, 2min)	tanδ +20°C ▪ 120Hz (%)	Max. ESR +20°C ▪ 100kHz (mΩ)	I_R ▪ Max. Ripple Current +135°C ▪ 100kHz (mA rms)	CapXon Part Number
16	●	●	100	6.3	5.8	16.0	16	50	900	AN101M016E058PTR ☐☐
	●	●	120	6.3	5.8	19.2	16	50	900	AN121M016E058PTR ☐☐
	●	●	150	6.3	5.8	24.0	16	50	900	AN151M016E058PTR ☐☐
	●	●	220	6.3	7.7	35.2	16	30	1400	AN221M016E077PTR ☐☐
	●	●	270	6.3	7.7	43.2	16	30	1700	AN271M016E077PTR ☐☐
	●	●	330	10	10.5	52.8	16	20	2000	AN331M016G105PTR ☐☐
	●	●	470	8	10.5	75.2	16	27	1600	AN471M016F105PTR ☐☐
	●	●	470	10	10.5	75.2	16	20	2000	AN471M016G105PTR ☐☐
	●	●	560	8	11.7	89.6	16	23	1650	AN561M016F117PTR ☐☐
	●	●	560	10	10.5	89.6	16	20	2000	AN561M016G105PTR ☐☐
	●	●	820	10	12.4	131.2	16	16	2260	AN821M016G124PTR ☐☐
25	●		33	5	5.8	8.3	14	80	550	AN330M025C058PTR ☐☐
	●	●	56	6.3	5.8	14.0	14	50	900	AN560M025E058PTR ☐☐
	●	●	100	6.3	7.7	25.0	14	30	1400	AN101M025E077PTR ☐☐
	●	●	220	8	10.5	55.0	14	27	1600	AN221M025F105PTR ☐☐
	●	●	270	8	11.7	67.5	14	25	1650	AN271M025F117PTR ☐☐
	●	●	330	10	10.5	82.5	14	20	2000	AN331M025G105PTR ☐☐
	●	●	470	10	12.4	117.5	14	16	2260	AN471M025G124PTR ☐☐
35	●		22	5	5.8	7.7	12	100	550	AN220M035C058PTR ☐☐
	●	●	47	6.3	5.8	16.5	12	60	900	AN470M035E058PTR ☐☐
	●	●	68	6.3	7.7	23.8	12	35	1400	AN680M035E077PTR ☐☐
	●	●	100	8	10.5	35.0	12	27	1600	AN101M035F105PTR ☐☐
	●	●	150	8	10.5	52.5	12	27	1600	AN151M035F105PTR ☐☐
	●	●	180	8	11.7	63.0	12	25	1650	AN181M035F117PTR ☐☐
	●	●	270	10	10.5	94.5	12	20	2000	AN271M035G105PTR ☐☐
	●	●	330	10	12.4	115.5	12	17	2260	AN331M035G124PTR ☐☐
50	●		10	5	5.8	5.0	10	120	500	AN100M050C058PTR ☐☐
	●	●	22	6.3	5.8	11.0	10	80	750	AN220M050E058PTR ☐☐
	●	●	33	6.3	7.7	16.5	10	40	1100	AN330M050E077PTR ☐☐
	●	●	56	10	10.5	28.0	10	28	1600	AN560M050G105PTR ☐☐
	●	●	68	8	10.5	34.0	10	30	1250	AN680M050F105PTR ☐☐

For further information please contact sales@capxon.org

STANDARD RATINGS

Part number shows blister tape on paper reel

V_R (V)	Standard	Vibration-proof	C_R (µF)	ø D (mm)	L (mm)	I_{LEAK} (µA, 2min)	tanδ +20°C ▪ 120Hz (%)	Max. ESR +20°C ▪ 100kHz (mΩ)	I_R ▪ Max. Ripple Current +135°C ▪ 100kHz (mA rms)	CapXon Part Number
50	●	●	82	8	11.7	41.0	10	28	1300	AN820M050F117PTR □□
	●	●	100	10	10.5	50.0	10	28	1600	AN101M050G105PTR □□
	●	●	120	10	10.5	60.0	10	28	1600	AN121M050G105PTR □□
	●	●	120	10	12.4	60.0	10	25	1750	AN121M050G124PTR □□
63	●	●	10	6.3	5.8	6.3	8	120	700	AN100M063E058PTR □□
	●	●	22	6.3	7.7	13.9	8	80	900	AN220M063E077PTR □□
	●	●	33	8	10.5	20.8	8	40	1100	AN330M063F105PTR □□
	●	●	47	8	10.5	29.6	8	40	1100	AN470M063F105PTR □□
	●	●	47	8	11.7	29.6	8	38	1130	AN470M063F117PTR □□
	●	●	56	10	10.5	35.3	8	30	1400	AN560M063G105PTR □□
	●	●	68	10	10.5	42.8	8	30	1400	AN680M063G105PTR □□
	●	●	82	10	12.4	51.7	8	22	1650	AN820M063G124PTR □□
80	●	●	22	8	10.5	17.6	8	45	1050	AN220M080F105PTR □□
	●	●	27	8	11.7	21.6	8	43	1080	AN270M080F117PTR □□
	●	●	33	10	10.5	26.4	8	36	1360	AN330M080G105PTR □□
	●	●	47	10	10.5	37.6	8	36	1360	AN470M080G105PTR □□
	●	●	56	10	12.4	44.8	8	35	1440	AN560M080G124PTR □□
	●	●	68	10	12.4	54.4	8	32	1540	AN680M080G124PTR □□
100	●	●	22	8	10.5	22.0	8	55	950	AN220M100F105PTR □□
	●	●	22	8	11.7	22.0	8	52	980	AN220M100F117PTR □□
	●	●	22	10	10.5	22.0	8	45	1200	AN220M100G105PTR □□
	●	●	27	10	12.4	27.0	8	40	1360	AN270M100G124PTR □□
	●	●	33	10	12.4	33.0	8	40	1360	AN330M100G124PTR □□

□□: Leave **blank** for Standard package
□□: Enter **W** for Vibration proof version
□□: Enter **X** for AEC-Q200
□□: Enter **XW** for AEC-Q200 and Vibration proof version

MULTIPLIER K_f for RIPPLE CURRENT vs. FREQUENCY

Frequency (Hz)	120 ≤ Freq. < 1k	1k ≤ Freq. < 10k	10k ≤ Freq. < 100k	100k ≤ Freq. < 300k
Coefficient K_f	0.1	0.3	0.6	1

PRECAUTIONS, GUIDELINES AND PACKAGING INFORMATON

Unless otherwise agreed in individual specifications, all products are subject to our “General Precautions and Guidelines” as well as our “Packaging Information”. Please refer to the following links in the table.

	
General Precautions and Guidelines	Packaging Information Hybrid SMD
Page 837	Page 806

For further information please contact sales@capxon.org

DISCLAIMER

All product related data (e.g. specification, statements and general information) are subject to change without any notice. It is necessary that the customer observes all product related technical / application information and handling instructions.

CapXon products are designed and manufactured according to severe quality and safety standards. Under no circumstance, CapXon warrants that any CapXon product is suitable for the purposes intended for your application, even CapXon knows the application. It is customer's duty and obligation to check and make sure that CapXon products are suitable for the purposes intended and select the correct and proper CapXon product. Customers are requested to perform a sufficient validation and reliability evaluation to assure needed safety level and reliability performance by suitable designs and to apply proper safeguards (e.g. redundancies, protective circuits).

Particular operating conditions (ambient temperature, ripple current, voltage, thermal resistance, etc.) as well as storage, production or assembly may affect the performance and the lifetime of the capacitor. Please consult CapXon for lifetime estimation, failure mode considerations or worst-case scenarios according to the product technology, product tolerances / deviations or change of the characteristics of the capacitor due to shipment, storage, handling, production and usage.

For aerospace or military application, life-saving, life-sustaining, safety critical applications or any application where failure may cause severe personal injury or death, please consult us before design-in the capacitor in your application.

Except for the written expressed warranties, CapXon does not impliedly, by assumption or whatever else, warrant, undertake, promise any other warranty or guaranty for any CapXon product.

For further information, please visit our website www.capxongroup.com or contact CapXon directly.

AR SERIES ▪ HIGH TEMPERATURE TYPE 145°C

KEY FEATURES

AEC-Q 200 · HIGH VIBRATION · °C HIGH TEMPERATURE

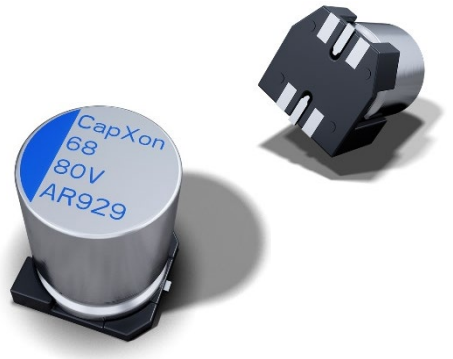

- **HYBRID CONDUCTIVE POLYMER** ▪ SMD type
- Endurance: 145°C ▪ 2000 hours
- Low ESR and high ripple current
- Vibration-proof (VP) version (up to 30g) available
- AEC-Q200 version available

HF Halogen Free · MSL 1 · RoHS & REACH COMPLIANT

SPECIFICATIONS

Items		Performance Characteristics
Operating Temperature Range		-55 ~ +145°C
Rated Voltage Range	V_R	16 ~ 80V DC
Surge Voltage	V_S	($V_R \le 100V$): $V_S = 1.25 \cdot V_R$
Capacitance Range	C_R	22 ~ 560µF
Cap. Tolerance	ΔC	±20% (120Hz ▪ 20°C)
Leakage Current (20°C ▪ V_R applied)	I_{LEAK}	Not to exceed the values shown in standard ratings After 2 minutes
Dissipation Factor % (20°C ▪ 120Hz)	tanδ	Not to exceed the values shown in standard ratings
Equivalent Series Resistance (20°C ▪ 100kHz)	ESR	Not to exceed the values shown in standard ratings

Lifetime Test		
Endurance 145°C (V_R & I_R applied)	Test	**2000 hours**
	$\triangle C/C_R$	Within ±30% of the initial value
	tanδ	Less than 200% of the specified value
	ESR	Less than 200% of the specified value
	I_{Leak}	Less than the specified value

DIMENSIONS STANDARD PACKAGE ▪ All dimensions in mm

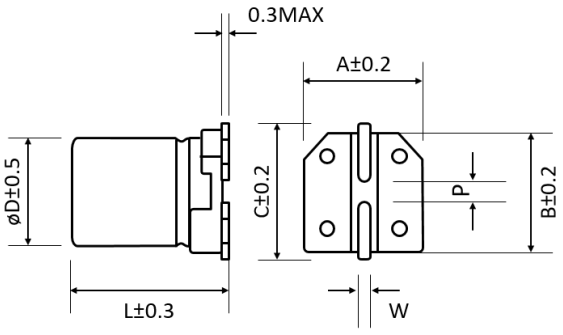

ø D	L	A	B	C	W	P±0.2
8	10.5	8.3	8.3	9.0	0.7 to 1.1	3.1
8	11.7	8.3	8.3	9.0	0.7 to 1.1	3.1
10	10.5	10.3	10.3	11.0	0.7 to 1.1	4.5
10	12.4	10.3	10.3	11.0	0.7 to 1.1	4.5

For further information please contact sales@capxon.org

DIMENSIONS VP PACKAGE (VIBRATION PROOF) ▪ All dimensions in mm

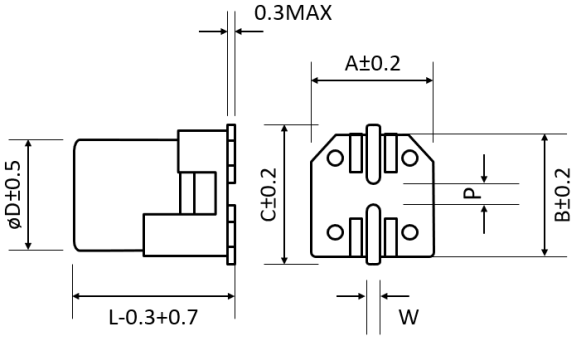

ø D	L	A	B	C	W	P±0.2
8	10.5	8.3	8.3	9.0	0.7 to 1.1	3.1
8	11.7	8.3	8.3	9.0	0.7 to 1.1	3.1
10	10.5	10.5	10.5	11.2	0.7 to 1.1	4.5
10	12.4	10.5	10.5	11.2	0.7 to 1.1	4.5

STANDARD RATINGS

Part number shows blister tape on paper reel

V_R (V)	Standard	Vibration-proof	C_R (µF)	ø D (mm)	L (mm)	I_{LEAK} (µA, 2min)	tanδ +20°C ▪ 120Hz (%)	Max. ESR +20°C ▪ 100kHz (mΩ)	I_R ▪ Max. Ripple Current +145°C ▪ 100kHz (mA rms)	CapXon Part Number
16	●	●	270	8	10.5	43.2	16	27	700	AR271M016F105PTR ☐☐☐
	●	●	330	8	10.5	52.8	16	25	770	AR331M016F105PTR ☐☐☐
	●	●	470	10	10.5	75.2	16	20	900	AR471M016G105PTR ☐☐☐
	●	●	560	10	12.4	89.6	16	16	1050	AR561M016G124PTR ☐☐☐
25	●	●	220	8	10.5	55.0	14	27	700	AR221M025F105PTR ☐☐☐
	●	●	270	8	11.7	67.5	14	25	770	AR271M025F117PTR ☐☐☐
	●	●	330	10	10.5	82.5	14	20	900	AR331M025G105PTR ☐☐☐
	●	●	470	10	12.4	117.5	14	16	1050	AR471M025G124PTR ☐☐☐
35	●	●	100	8	10.5	35.0	12	27	700	AR101M035F105PTR ☐☐☐
	●	●	150	8	10.5	52.5	12	27	700	AR151M035F105PTR ☐☐☐
	●	●	180	8	11.7	63.0	12	25	770	AR181M035F117PTR ☐☐☐
	●	●	270	10	10.5	94.5	12	20	900	AR271M035G105PTR ☐☐☐
	●	●	330	10	12.4	115.5	12	17	1020	AR331M035G124PTR ☐☐☐
50	●	●	68	8	10.5	34.0	10	30	600	AR680M050F105PTR ☐☐☐
	●	●	82	8	11.7	41.0	10	28	660	AR820M050F117PTR ☐☐☐
	●	●	56	10	10.5	28.0	10	28	800	AR560M050G105PTR ☐☐☐
	●	●	100	10	10.5	50.0	10	28	800	AR101M050G105PTR ☐☐☐
	●	●	120	10	10.5	60.0	10	28	800	AR121M050G105PTR ☐☐☐
	●	●	120	10	12.4	60.0	10	25	900	AR121M050G124PTR ☐☐☐
63	●	●	33	8	10.5	20.8	8	40	600	AR330M063F105PTR ☐☐☐
	●	●	47	8	10.5	29.6	8	40	600	AR470M063F105PTR ☐☐☐
	●	●	47	8	11.7	29.6	8	38	650	AR470M063F117PTR ☐☐☐
	●	●	56	10	10.5	35.3	8	30	800	AR560M063G105PTR ☐☐☐
	●	●	68	10	10.5	42.8	8	30	800	AR680M063G105PTR ☐☐☐
	●	●	82	10	12.4	51.7	8	27	900	AR820M063G124PTR ☐☐☐
80	●	●	22	8	10.5	17.6	8	45	560	AR220M080F105PTR ☐☐☐
	●	●	27	8	11.7	21.6	8	43	580	AR270M080F117PTR ☐☐☐
	●	●	33	8	10.5	26.4	8	36	730	AR330M080G105PTR ☐☐☐
	●	●	47	10	10.5	37.6	8	36	730	AR470M080G105PTR ☐☐☐
	●	●	56	10	12.4	44.8	8	34	800	AR560M080G124PTR ☐☐☐
	●	●	68	10	12.4	54.4	8	34	800	AR680M080G124PTR ☐☐☐

☐☐☐: Leave **blank** for Standard package
☐☐☐: Enter **W** for Vibration proof version
☐☐☐: Enter **X** for AEC-Q200
☐☐☐: Enter **XW** for AEC-Q200 and Vibration proof version

For further information please contact sales@capxon.org

MULTIPLIER K_f for RIPPLE CURRENT vs. FREQUENCY

Frequency (Hz)	120 ≤ Freq. < 1k	1k ≤ Freq. < 10k	10k ≤ Freq. < 100k	100k ≤ Freq. < 300k
Coefficient K_f	0.1	0.3	0.6	1

PRECAUTIONS, GUIDELINES AND PACKAGING INFORMATON

Unless otherwise agreed in individual specifications, all products are subject to our “General Precautions and Guidelines” as well as our “Packaging Information”. Please refer to the following links in the table.

General Precautions and Guidelines	Packaging Information Hybrid SMD
Page 837	Page 806

DISCLAIMER

All product related data (e.g. specification, statements and general information) are subject to change without any notice. It is necessary that the customer observes all product related technical / application information and handling instructions.

CapXon products are designed and manufactured according to severe quality and safety standards. Under no circumstance, CapXon warrants that any CapXon product is suitable for the purposes intended for your application, even CapXon knows the application. It is customer's duty and obligation to check and make sure that CapXon products are suitable for the purposes intended and select the correct and proper CapXon product. Customers are requested to perform a sufficient validation and reliability evaluation to assure needed safety level and reliability performance by suitable designs and to apply proper safeguards (e.g. redundancies, protective circuits).

Particular operating conditions (ambient temperature, ripple current, voltage, thermal resistance, etc.) as well as storage, production or assembly may affect the performance and the lifetime of the capacitor. Please consult CapXon for lifetime estimation, failure mode considerations or worst-case scenarios according to the product technology, product tolerances / deviations or change of the characteristics of the capacitor due to shipment, storage, handling, production and usage.

For aerospace or military application, life-saving, life-sustaining, safety critical applications or any application where failure may cause severe personal injury or death, please consult us before design-in the capacitor in your application.

Except for the written expressed warranties, CapXon does not impliedly, by assumption or whatever else, warrant, undertake, promise any other warranty or guaranty for any CapXon product.

For further information, please visit our website www.capxongroup.com or contact CapXon directly.

AP SERIES ▪ HIGH TEMPERATURE TYPE 150°C

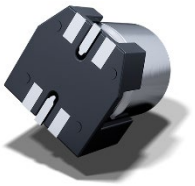



KEY FEATURES

AEC-Q 200 · HIGH VIBRATION · °C HIGH TEMPERATURE

- **HYBRID CONDUCTIVE POLYMER** ▪ SMD type
- Endurance: 150°C ▪ 1000 hours
- Low ESR and high ripple current
- Vibration Proof (VP) version (up to 30g) available
- AEC-Q200 version available

HF Halogen Free · MSL 1 · RoHS & REACH COMPLIANT

SPECIFICATIONS

Items		Performance Characteristics
Operating Temperature Range		-55 ~ +150°C
Rated Voltage Range	V_R	16 ~ 80V DC
Surge Voltage	V_S	($V_R \le 100V$): $V_S = 1.25 \cdot V_R$
Capacitance Range	C_R	22 ~ 560µF
Cap. Tolerance	ΔC	±20% (120Hz ▪ 20°C)
Leakage Current (20°C ▪ V_R applied)	I_{LEAK}	Not to exceed the values shown in standard ratings After 2 minutes
Dissipation Factor % (20°C ▪ 120Hz)	tanδ	Not to exceed the values shown in standard ratings
Equivalent Series Resistance (20°C ▪ 100kHz)	ESR	Not to exceed the values shown in standard ratings

Lifetime Test		
Endurance 150°C (V_R & I_R applied)	Test	**1000 hours**
	$\triangle C/C_R$	Within ±30% of the initial value
	tanδ	Less than 200% of the specified value
	ESR	Less than 200% of the specified value
	I_{Leak}	Less than the specified value

DIMENSIONS STANDARD PACKAGE ▪ All dimensions in mm

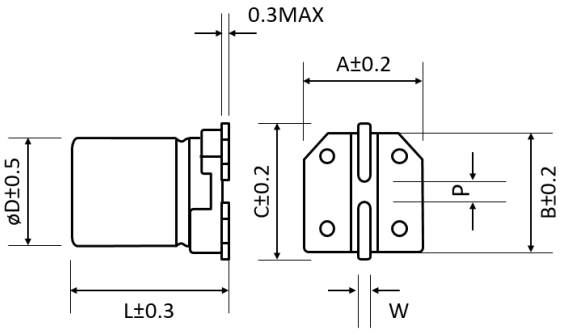

ø D	L	A	B	C	W	P±0.2
8	10.5	8.3	8.3	9.0	0.7 to 1.1	3.1
8	11.7	8.3	8.3	9.0	0.7 to 1.1	3.1
10	10.5	10.3	10.3	11.0	0.7 to 1.1	4.5
10	12.4	10.3	10.3	11.0	0.7 to 1.1	4.5

For further information please contact sales@capxon.org

DIMENSIONS VP PACKAGE (VIBRATION PROOF) ▪ All dimensions in mm

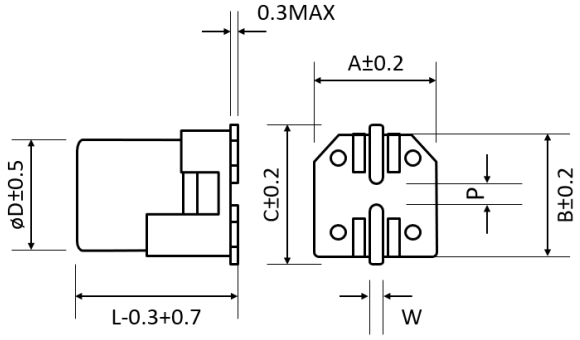

ø D	L	A	B	C	W	P±0.2
8	10.5	8.3	8.3	9.0	0.7 to 1.1	3.1
8	11.7	8.3	8.3	9.0	0.7 to 1.1	3.1
10	10.5	10.5	10.5	11.2	0.7 to 1.1	4.5
10	12.4	10.5	10.5	11.2	0.7 to 1.1	4.5

STANDARD RATINGS

Part number shows blister tape on paper reel

V_R (V)	Standard	Vibration-proof	C_R (µF)	ø D (mm)	L (mm)	I_{LEAK} (µA, 2min)	tanδ +20°C ▪ 120Hz (%)	Max. ESR +20°C ▪ 100kHz (mΩ)	I_R ▪ Max. Ripple Current +150°C ▪ 100kHz (mA rms)	CapXon Part Number
16	●	●	270	8	10.5	43.2	16	27	700	AP271M016F105PTR ☐☐☐
	●	●	330	8	10.5	52.8	16	25	770	AP331M016F105PTR ☐☐☐
	●	●	470	10	10.5	75.2	16	20	900	AP471M016G105PTR ☐☐☐
	●	●	560	10	12.4	89.6	16	16	1050	AP561M016G124PTR ☐☐☐
25	●	●	220	8	10.5	55.0	14	27	700	AP221M025F105PTR ☐☐☐
	●	●	270	8	11.7	67.5	14	25	770	AP271M025F117PTR ☐☐☐
	●	●	330	10	10.5	82.5	14	20	900	AP331M025G105PTR ☐☐☐
	●	●	470	10	12.4	117.5	14	16	1050	AP471M025G124PTR ☐☐☐
35	●	●	100	8	10.5	35.0	12	27	700	AP101M035F105PTR ☐☐☐
	●	●	150	8	10.5	52.5	12	27	700	AP151M035F105PTR ☐☐☐
	●	●	180	8	11.7	63.0	12	25	770	AP181M035F117PTR ☐☐☐
	●	●	270	10	10.5	94.5	12	20	900	AP271M035G105PTR ☐☐☐
	●	●	330	10	12.4	115.5	12	17	1020	AP331M035G124PTR ☐☐☐
50	●	●	56	10	10.5	28.0	10	28	800	AP560M050G105PTR ☐☐☐
	●	●	68	8	10.5	34.0	10	30	600	AP680M050F105PTR ☐☐☐
	●	●	82	8	11.7	41.0	10	28	660	AP820M050F117PTR ☐☐☐
	●	●	100	10	10.5	50.0	10	28	800	AP101M050G105PTR ☐☐☐
	●	●	120	10	10.5	60.0	10	28	800	AP121M050G105PTR ☐☐☐
	●	●	120	10	12.4	60.0	10	25	900	AP121M050G124PTR ☐☐☐
63	●	●	33	8	10.5	20.8	8	40	600	AP330M063F105PTR ☐☐☐
	●	●	47	8	10.5	29.6	8	40	600	AP470M063F105PTR ☐☐☐
	●	●	47	8	11.7	29.6	8	38	650	AP470M063F117PTR ☐☐☐
	●	●	56	10	10.5	35.3	8	30	800	AP560M063G105PTR ☐☐☐
	●	●	68	10	10.5	42.8	8	30	800	AP680M063G105PTR ☐☐☐
	●	●	82	10	12.4	51.7	8	27	900	AP820M063G124PTR ☐☐☐
80	●	●	22	8	10.5	17.6	8	45	560	AP220M080F105PTR ☐☐☐
	●	●	27	8	11.7	21.6	8	43	580	AP270M080F117PTR ☐☐☐
	●	●	33	8	10.5	26.4	8	36	730	AP330M080G105PTR ☐☐☐
	●	●	47	10	10.5	37.6	8	36	730	AP470M080G105PTR ☐☐☐
	●	●	56	10	12.4	44.8	8	34	800	AP560M080G124PTR ☐☐☐
	●	●	68	10	12.4	54.4	8	34	800	AP680M080G124PTR ☐☐☐

☐☐☐: Leave **blank** for Standard package
☐☐☐: Enter **W** for Vibration proof version
☐☐☐: Enter **X** for AEC-Q200
☐☐☐: Enter **XW** for AEC-Q200 and Vibration proof version

For further information please contact sales@capxon.org

MULTIPLIER K_f for RIPPLE CURRENT vs. FREQUENCY

Frequency (Hz)	120 ≤ Freq. < 1k	1k ≤ Freq. < 10k	10k ≤ Freq. < 100k	100k ≤ Freq. < 300k
Coefficient K_f	0.1	0.3	0.6	1

PRECAUTIONS, GUIDELINES AND PACKAGING INFORMATON

Unless otherwise agreed in individual specifications, all products are subject to our “General Precautions and Guidelines” as well as our “Packaging Information”. Please refer to the following links in the table.

General Precautions and Guidelines	Packaging Information Hybrid SMD
Page 837	Page 806

DISCLAIMER

All product related data (e.g. specification, statements and general information) are subject to change without any notice. It is necessary that the customer observes all product related technical / application information and handling instructions.

CapXon products are designed and manufactured according to severe quality and safety standards. Under no circumstance, CapXon warrants that any CapXon product is suitable for the purposes intended for your application, even CapXon knows the application. It is customer's duty and obligation to check and make sure that CapXon products are suitable for the purposes intended and select the correct and proper CapXon product. Customers are requested to perform a sufficient validation and reliability evaluation to assure needed safety level and reliability performance by suitable designs and to apply proper safeguards (e.g. redundancies, protective circuits).

Particular operating conditions (ambient temperature, ripple current, voltage, thermal resistance, etc.) as well as storage, production or assembly may affect the performance and the lifetime of the capacitor. Please consult CapXon for lifetime estimation, failure mode considerations or worst-case scenarios according to the product technology, product tolerances / deviations or change of the characteristics of the capacitor due to shipment, storage, handling, production and usage.

For aerospace or military application, life-saving, life-sustaining, safety critical applications or any application where failure may cause severe personal injury or death, please consult us before design-in the capacitor in your application.

Except for the written expressed warranties, CapXon does not impliedly, by assumption or whatever else, warrant, undertake, promise any other warranty or guaranty for any CapXon product.

For further information, please visit our website www.capxongroup.com or contact CapXon directly.

PRODUCT CODE ▪ SMD HYBRID CONDUCTIVE POLYMER CAPACITORS

SMD type example:
AA series ▪ 220µF ▪ 25V ▪ ±20% ▪ Ø 8mm ▪ L 10.5mm ▪ Tape & Reel ▪ AEC-Q200 ▪ Vibration proof package

1	2	3	4	5	6	7	8	9	10	11	12	13	14	15	16	17	18	19	20
A	A	2	2	1	M	0	2	5	F	1	0	5	P	T	R	X	W	-	-

Series (AA)

Capacitance (221)

Code	µF
010	1
4R7	4.7
100	10
101	100
102	1000
152	1500

Capacitance tolerance (M)

Code	%
M	±20

Voltage (025)

Code	Volt
016	16
025	25
035	35
050	50
063	63
080	80
100	100
200	200

Case Ø (mm) (F)

Code	ØD
C	5
E	6.3
F	8
G	10

Height (mm) (105)

Code	H
058	5.8
077	7.7
105	10.5
117	11.7
124	12.4
165	16.5

Type code (P)

Code	Type
P	Polymer

Taping (TR)

Code	
TR	Tape on reel

Special requirement (XW--)

Code	Special
U	Plastic reel
W	Vibration proof
X	AEC-Q200

See datasheet for reference

Please consult CapXon for further assistance

MARKING ▪ SMD HYBRID CONDUCTIVE POLYMER CAPACITORS

Hybrid Polymer Capacitor ▪ SMD type

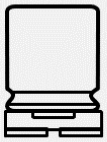

CapXon:	Manufacturer trademark
220:	Nominal capacitance (µF)
25V:	Rated voltage (V) ▪ Standard type
25X:	Rated voltage (V) ▪ AEC-Q200 type
	(-) polarity (Cathode indicate)
AA:	AA Series
003:	Production datacode year/week (ex. 2020/3rd week)

Top view
Standard type



Top view
AEC-Q200 type



0 03
Production week
Last digit of the year

For further information please contact sales@capxon.org

TAPING ▪ SMD HYBRID CONDUCTIVE POLYMER CAPACITORS ▪ REEL PACK

SMD taping ▪ ØD 5mm to 10mm

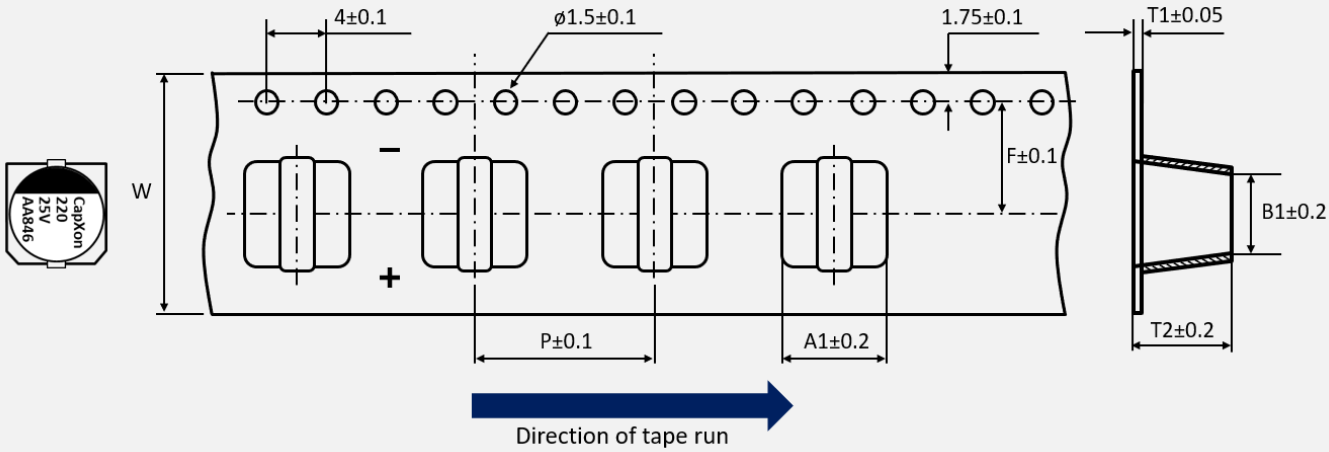

All dimensions in mm

Ø D	5 x 5.8	6.3 x 5.8	6.3 x 7.7	8 x 10.5	8 x 11.7	10 x 10.5	10 x 12.4	10 x 16.5
W	12	16	16	24	24	24	24	24
P	12	12	12	16	16	16	16	16
F	5.5	7.5	7.5	11.5	11.5	11.5	11.5	11.5
A1	5.7	7	7	8.7	8.7	10.7	10.7	10.7
B1	5.7	7	7	8.7	8.7	10.7	10.7	10.7
T1	0.4	0.4	0.4	0.4	0.4	0.4	0.4	0.5
T2	6.1	6.2	8	11	13	11	12.9	17.5

For further information please contact sales@capxon.org

TAPING ▪ SMD HYBRID CONDUCTIVE POLYMER CAPACITORS ▪ REEL PACK

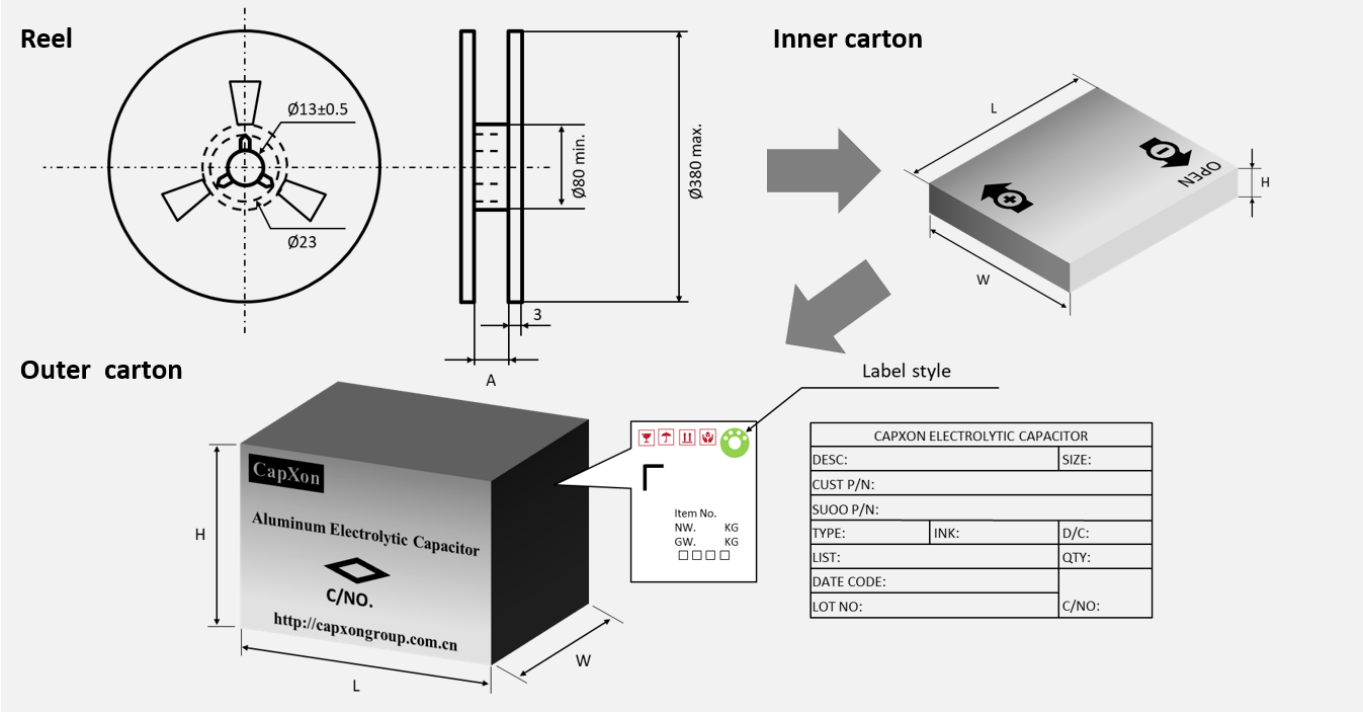

Ø D (mm)	L (mm)	A (mm)	Reel quantity (pcs)	Inner box quantity (pcs)	Inner box size L x W x H (mm)	Outer box quantity (pcs)	Outer box size L x W x H (mm)	Country of origin	Tariff number
5	5.8	14	1000	5000	400 x 390 x 106	15000	425 x 412 x 340	China	85322200
6.3	5.8	18	1000	4000	400 x 390 x 106	12000	425 x 412 x 340	China	85322200
	7.7	18	900	3600	400 x 390 x 106	10800	425 x 412 x 340	China	85322200
8	10.5	26	500	1500	400 x 390 x 106	4500	425 x 412 x 340	China	85322200
	11.7	26	400	1200	400 x 390 x 106	3600	425 x 412 x 340	China	85322200
10	10.5	26	500	1500	400 x 390 x 106	4500	425 x 412 x 340	China	85322200
	12.4	26	400	1200	400 x 390 x 106	3600	425 x 412 x 340	China	85322200
	16.5	26	250	750	400 x 390 x 106	2250	425 x 412 x 340	China	85322200

Remark: Standard = Paper reel
Plastic reel = Add code "U" at the end of the part number

For further information please contact sales@capxon.org

DIMENSIONS STANDARD PACKAGE ▪ All dimensions in mm

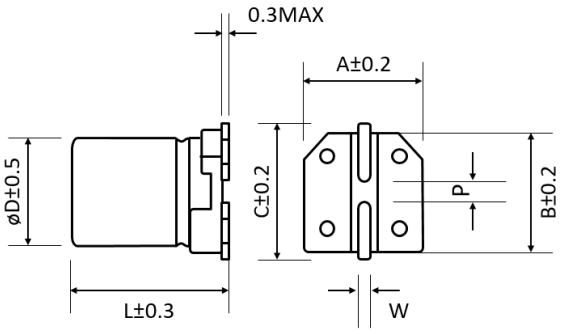

ø D	L	A	B	C	W	P±0.2
5	5.8	5.3	5.3	5.9	0.5 to 0.8	1.4
6.3	5.8	6.6	6.6	7.2	0.5 to 0.8	2.2
6.3	7.7	6.6	6.6	7.2	0.5 to 0.8	2.2
8	10.5	8.3	8.3	9.0	0.7 to 1.1	3.1
8	11.7	8.3	8.3	9.0	0.7 to 1.1	3.1
10	10.5	10.3	10.3	11.0	0.7 to 1.1	4.5
10	12.4	10.3	10.3	11.0	0.7 to 1.1	4.5
10	16.5	10.3	10.3	11.0	0.7 to 1.1	4.5

PAD LAYOUT STANDARD PACKAGE ▪ All dimensions in mm

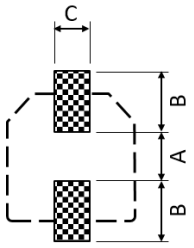

ø D	L	A	B	C
5	5.8	1.4	3.0	1.6
6.3	5.8	2.1	3.5	1.6
6.3	7.7	2.1	3.5	1.6
8	10.5	2.8	4.2	1.9
8	11.7	2.8	4.2	1.9
10	10.5	4.3	4.4	1.9
10	12.4	4.3	4.4	1.9
10	16.5	4.3	4.4	1.9

DIMENSIONS VIBRATION PROOF PACKAGE ▪ All dimensions in mm

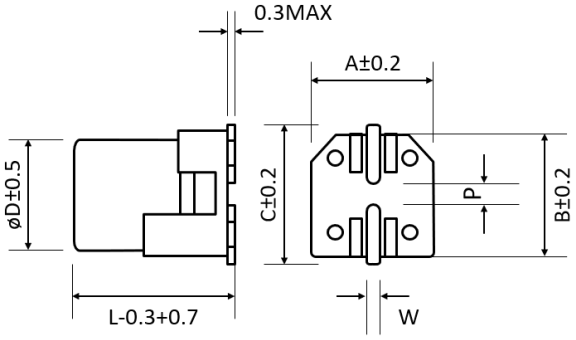

ø D	L	A	B	C	W	P±0.2
6.3	5.8	6.6	6.6	7.3	0.5 to 0.8	2.2
6.3	7.7	6.6	6.6	7.3	0.5 to 0.8	2.2
8	10.5	8.3	8.3	9.0	0.7 to 1.1	3.1
8	11.7	8.3	8.3	9.0	0.7 to 1.1	3.1
10	10.5	10.5	10.5	11.2	0.7 to 1.1	4.5
10	12.4	10.5	10.5	11.2	0.7 to 1.1	4.5
10	16.5	10.5	10.5	11.2	0.7 to 1.1	4.5

PAD LAYOUT VIBRATION PROOF PACKAGE ▪ All dimensions in mm

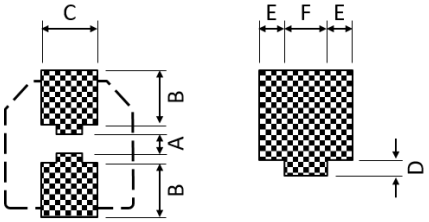

ø D	L	A	B	C	D	E	F
6.3	5.8	2.1	3.5	3.3	0.8	0.8	1.7
6.3	7.7	2.1	3.5	3.3	0.8	0.8	1.7
8	10.5	2.8	4.2	4.5	0.8	1.1	2.3
8	11.7	2.8	4.2	4.5	0.8	1.1	2.3
10	10.5	4.3	4.5	5.0	0.8	1.3	2.4
10	12.4	4.3	4.5	5.0	0.8	1.3	2.4
10	16.5	4.3	4.5	5.0	0.8	1.3	2.4

VIBRATION SPECIFICATION ▪ STANDARD AND VIBRATION PROOF PACKAGE

Reference JIS C 60068-2 / IEC 60068-2-6

Package	Condition	Determinant Standard
Standard	1. 10Hz ~ 2kHz ~ 10Hz (20 minutes) 2. Amplitude (single peak): 0.35 mm (at 10 ~ 55Hz) 3. Acceleration: 49m/s^2 (5g at 55 ~ 2kHz) 4. X, Y, Z directions, 4 hours per direction, total 12 hours	1. ΔC/C ≤ ±5% of initial value 2. DF ≤ stated limit 3. LC ≤ stated limit 4. No visible damage 5. No leakage of electrolyte
Vibration-proof	1. 10Hz ~ 2kHz ~ 10Hz (10 minutes) 2. Amplitude (single peak): 2 mm (at 10 ~ 55Hz) 3. Acceleration: 294m/s^2 (30g at 55 ~ 2kHz) 4. X, Y, Z directions, 4 hours per direction, total 12 hours	1. ΔC/C ≤ ±5% of initial value 2. DF ≤ stated limit 3. LC ≤ stated limit 4. No visible damage 5. No leakage of electrolyte

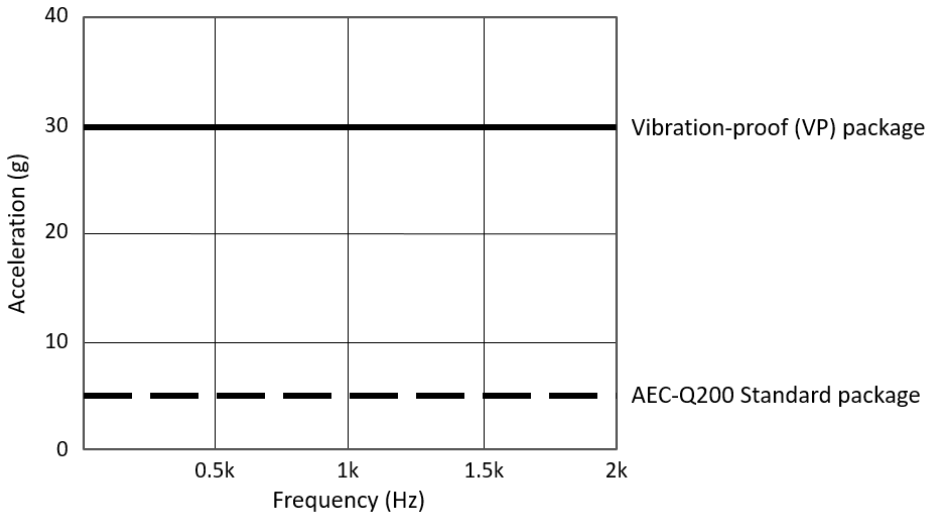

For further information please contact sales@capxon.org

Hybrid Conductive Polymer Capacitors

Radial Types



OVERVIEW ▪ RADIAL HYBRID POLYMER CONDUCTIVE CAPACITORS

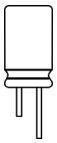

Features

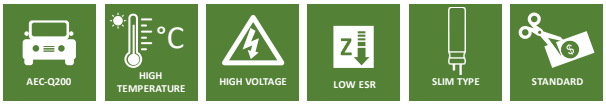

Series	Page	AEC-Q200	High Temperature	High Voltage	Low ESR	Slim Type	Standard	Temperature Range (°C)		Voltage Range (V)		Capacitance Range (µF)		Endurance (hours)
AS	813	●		●	●	●	●	-55	+105	16	400	1.2	1500	2000 to 10000
AT	816	●	●		●	●		-55	+125	16	100	8.2	1500	2000 to 4000
AK	819	●	●		●			-55	+135	16	100	8.2	560	2000 to 3000
AL	822	●	●		●			-55	+145	16	80	8.2	560	2000
AM	825	●	●		●			-55	+150	16	80	8.2	560	1000

For further information please contact sales@capxon.org

AS SERIES ▪ LONG LIFE UP TO 10 000 HOURS

KEY FEATURES

AEC-Q 200 HIGH VOLTAGE



- **HYBRID CONDUCTIVE POLYMER** ▪ THT type
- Endurance: 105°C ▪ 2 000 up to 10 000 hours
- Low ESR and high ripple current
- Superior electrical stability over application lifetime
- AEC-Q200 version available

HF Halogen Free RoHS & REACH COMPLIANT

SPECIFICATIONS

Items		Performance Characteristics
Operating Temperature Range		-55 ~ +105°C
Rated Voltage Range	V_R	16 ~ 400V DC
Surge Voltage	V_S	($V_R \le 100V$): $V_S = 1.25 \cdot V_R$ ($V_R \ge 200V$): $V_S = 1.15 \cdot V_R$
Capacitance Range	C_R	1.2 ~ 1500µF
Cap. Tolerance	ΔC	±20% (120Hz ▪ 20°C)
Leakage Current (20°C ▪ V_R applied)	I_{LEAK}	Not to exceed the values shown in standard ratings After 2 minutes
Dissipation Factor % (20°C ▪ 120Hz)	tanδ	Not to exceed the values shown in standard ratings
Equivalent Series Resistance (20°C ▪ 100kHz)	ESR	Not to exceed the values shown in standard ratings

Lifetime Test			
Endurance 105°C (V_R & I_R applied)	Test	**10 000 hours**	≥ ø D 8 ▪ < 250V
		5 000 hours	≤ ø D 6.3 ▪ < 250V DC
		5 000 hours	250V
		2 000 hours	400V
	△C/C_R	Within ±30% of the initial value	
	tanδ	Less than 200% of the specified value	
	ESR	Less than 200% of the specified value	
	I_{Leak}	Less than the specified value	

DIMENSIONS ▪ All dimensions in mm

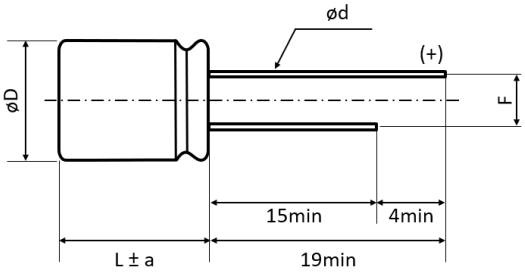

ø D	L	ØD±0.5	a	F±0.5	Ød±0.05
6.3	8	6.3	1	2.5	0.6
8	9	8	1.5	3.5	0.6
8	11.5	8	1.5	3.5	0.6
10	10	10	1.5	5	0.6
10	12.5	10	1.5	5	0.6
10	18	10	2	5	0.6

For further information please contact sales@capxon.org

STANDARD RATINGS

V_R (V)	C_R (µF)	ø D (mm)	L (mm)	I_{LEAK} (µA, 2min)	tanδ +20°C ▪ 120Hz (%)	Max. ESR +20°C ▪ 100kHz (mΩ)	I_R ▪ Max. Ripple Current +105°C ▪ 100kHz (mA rms)	CapXon Part Number
16	120	6.3	8	19.2	16	40	1500	AS121M016E080PTC [ ]
	270	8	9	43.2	16	26	2000	AS271M016F090PTD [ ]
	330	8	11.5	52.8	16	23	2350	AS331M016F115PTD [ ]
	470	10	10	75.2	16	21	2600	AS471M016G100PTA [ ]
	560	10	12.5	89.6	16	15	3000	AS561M016G125PTA [ ]
	1500	10	18	240.0	16	12	5000	AS152M016G180PTA [ ]
25	68	6.3	8	17.0	16	45	1400	AS680M025E080PTC [ ]
	150	8	9	37.5	16	27	1900	AS151M025F090PTD [ ]
	220	8	11.5	55.0	16	24	2250	AS221M025F115PTD [ ]
	270	10	10	67.5	16	22	2530	AS271M025G100PTA [ ]
	330	10	12.5	82.5	16	16	2900	AS331M025G125PTA [ ]
	1000	10	18	250,0	16	12	5000	AS102M025G180PTA [ ]
35	47	6.3	8	16.5	16	60	1300	AS470M035E080PTC [ ]
	100	8	9	35.0	16	30	1800	AS101M035F090PTD [ ]
	150	8	11.5	52.5	16	25	2100	AS151M035F115PTD [ ]
	150	10	10	52.5	16	23	2470	AS151M035G100PTA [ ]
	220	10	12.5	77.0	16	17	2830	AS221M035G125PTA [ ]
	680	10	18	238.0	16	14	4600	AS681M035G180PTA [ ]
40	27	6.3	8	10.8	16	70	1250	AS270M040E080PTC [ ]
	56	8	9	22.4	16	32	1750	AS560M040F090PTD [ ]
	82	8	11.5	32.8	16	27	2000	AS820M040F115PTD [ ]
	100	10	10	40.0	16	24	2400	AS101M040G100PTA [ ]
	120	10	10	48.0	16	18	2750	AS121M040G100PTA [ ]
	180	10	12.5	72.0	16	18	3000	AS181M040G125PTA [ ]
50	15	6.3	8	7.5	16	80	1200	AS150M050E080PTC [ ]
	33	8	9	16.5	16	35	1670	AS330M050F090PTD [ ]
	47	8	11.5	23.5	16	30	1900	AS470M050F115PTD [ ]
	56	10	10	28.0	16	25	2320	AS560M050G100PTA [ ]
	82	10	12.5	41.0	16	19	2650	AS820M050G125PTA [ ]
	220	10	18	110.0	16	15	4350	AS221M050G180PTA [ ]
63	10	6.3	8	6.3	16	100	1060	AS100M063E080PTC [ ]
	22	8	9	13.9	16	40	1560	AS220M063F090PTD [ ]
	27	8	11.5	17.0	16	35	1750	AS270M063F115PTD [ ]
	33	10	10	20.8	16	30	2100	AS330M063G100PTA [ ]
	47	10	10	29.6	16	30	2100	AS470M063G100PTA [ ]
	56	10	12.5	35.3	16	22	2400	AS560M063G125PTA [ ]
	150	10	18	94.5	16	18	4000	AS151M063G180PTA [ ]
80	8.2	8	9	6.6	16	90	1050	AS8R2M080F115PTD [ ]
	15	8	11.5	12.0	16	70	1400	AS150M080F115PTD [ ]
	12	10	10	9.6	16	70	1600	AS120M080G100PTA [ ]
	15	10	10	12.0	16	70	1600	AS150M080G100PTA [ ]
	18	10	12.5	14.4	16	50	1830	AS180M080G125PTA [ ]

[ ] see description at end of standard ratings

Part number shows taped version with straight leads and Ammo Pack packaging.

See "ADDITIONAL INFORMATION" for further lead treatment options.

STANDARD RATINGS

V_R (V)	C_R (µF)	ø D (mm)	L (mm)	I_{LEAK} (µA, 2min)	tanδ +20°C ▪ 120Hz (%)	Max. ESR +20°C ▪ 100kHz (mΩ)	I_R ▪ Max. Ripple Current +105°C ▪ 100kHz (mA rms)	CapXon Part Number
100	8.2	8	9	8.2	16	100	1000	AS8R2M100F090PTD ☐
	10	8	11.5	10.0	16	80	1300	AS100M100F115PTD ☐
	10	10	10	10.0	16	80	1450	AS100M100G100PTA ☐
	12	10	10	12.0	16	80	1450	AS120M100G100PTA ☐
	15	10	12.5	15.0	16	60	1660	AS150M100G125PTA ☐
	47	10	12.5	47.0	16	60	1660	AS470M100G125PTA ☐
250	8.2	10	12.5	20.5	16	120	740	AS8R2M250G125PTA ☐
400	1.2	8	9	4.8	16	200	430	AS1R2M400F090PTD ☐
	2.2	8	11.5	8.8	16	170	510	AS2R2M400F115PTD ☐
	4.7	10	12.5	18.8	16	150	650	AS4R7M400G125PTA ☐

☐: Leave **blank** for Standard type ☐: Enter **X** for AEC-Q200 type

Part number shows taped version with straight leads and Ammo Pack packaging.
See "PACKAGING INFORMATION" for further lead treatment options.

MULTIPLIER K_f for RIPPLE CURRENT vs. FREQUENCY

Frequency (Hz)	120 ≤ Freq. < 1k	1k ≤ Freq. < 10k	10k ≤ Freq. < 100k	100k ≤ Freq. < 300k
Coefficient K_f	0.1	0.3	0.6	1

PRECAUTIONS, GUIDELINES AND PACKAGING INFORMATON

Unless otherwise agreed in individual specifications, all products are subject to our "General Precautions and Guidelines" as well as our "Packaging Information". Please refer to the following links in the table.

General Precautions and Guidelines	Packaging Information Hybrid Radial
Page 837	Page 828

DISCLAIMER

All product related data (e.g. specification, statements and general information) are subject to change without any notice. It is necessary that the customer observes all product related technical / application information and handling instructions.

CapXon products are designed and manufactured according to severe quality and safety standards. Under no circumstance, CapXon warrants that any CapXon product is suitable for the purposes intended for your application, even CapXon knows the application. It is customer's duty and obligation to check and make sure that CapXon products are suitable for the purposes intended and select the correct and proper CapXon product. Customers are requested to perform a sufficient validation and reliability evaluation to assure needed safety level and reliability performance by suitable designs and to apply proper safeguards (e.g. redundancies, protective circuits).

Particular operating conditions (ambient temperature, ripple current, voltage, thermal resistance, etc.) as well as storage, production or assembly may affect the performance and the lifetime of the capacitor. Please consult CapXon for lifetime estimation, failure mode considerations or worst-case scenarios according to the product technology, product tolerances / deviations or change of the characteristics of the capacitor due to shipment, storage, handling, production and usage.

For aerospace or military application, life-saving, life-sustaining, safety critical applications or any application where failure may cause severe personal injury or death, please consult us before design-in the capacitor in your application.

Except for the written expressed warranties, CapXon does not impliedly, by assumption or whatever else, warrant, undertake, promise any other warranty or guaranty for any CapXon product.

For further information, please visit our website www.capxongroup.com or contact CapXon directly.

AT SERIES ▪ LONG LIFE AT 125°C UP TO 4000 hours



KEY FEATURES

AEC-Q 200 · °C HIGH TEMPERATURE

- **HYBRID CONDUCTIVE POLYMER** ▪ THT type
- Endurance: 125°C ▪ 2000 up to 4000 hours
- Low ESR and high ripple current
- Superior electrical stability over application lifetime
- AEC-Q200 version available

HF Halogen Free · RoHS & REACH COMPLIANT

SPECIFICATIONS

Items		Performance Characteristics
Operating Temperature Range		-55 ~ +125°C
Rated Voltage Range	V_R	16 ~ 100V DC
Surge Voltage	V_S	($V_R \le 100V$): $V_S = 1.25 \cdot V_R$
Capacitance Range	C_R	8.2 ~ 1500µF
Cap. Tolerance	ΔC	±20% (120Hz ▪ 20°C)
Leakage Current (20°C ▪ V_R applied)	I_{LEAK}	Not to exceed the values shown in standard ratings After 2 minutes
Dissipation Factor % (20°C ▪ 120Hz)	tanδ	Not to exceed the values shown in standard ratings
Equivalent Series Resistance (20°C ▪ 100kHz)	ESR	Not to exceed the values shown in standard ratings

Lifetime Test			
Endurance 125°C (V_R & I_R applied)	Test	**4000 hours**	≥ ø D 8
		2000 hours	≤ ø D 6.3
	△C/C_R	Within ±30% of the initial value	
	tanδ	Less than 200% of the specified value	
	ESR	Less than 200% of the specified value	
	I_{Leak}	Less than the specified value	

DIMENSIONS ▪ All dimensions in mm

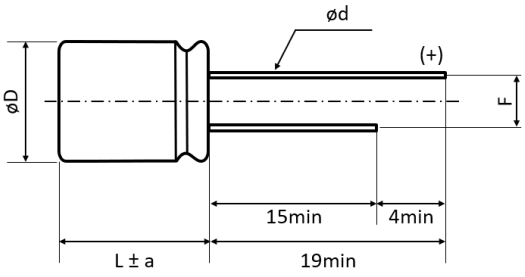

ø D	L	ØD±0.5	a	F±0.5	Ød±0.05
6.3	8	6.3	1	2.5	0.6
8	9	8	1.5	3.5	0.6
8	11.5	8	1.5	3.5	0.6
10	10	10	1.5	5	0.6
10	12.5	10	1.5	5	0.6
10	18	10	2	5	0.6

For further information please contact sales@capxon.org

STANDARD RATINGS

V_R (V)	C_R (µF)	ø D (mm)	L (mm)	I_{LEAK} (µA, 2min)	tanδ +20°C ▪ 120Hz (%)	Max. ESR +20°C ▪ 100kHz (mΩ)	I_R ▪ Max. Ripple Current +125°C ▪ 100kHz (mA rms)	CapXon Part Number
16	120	6.3	8	19.2	16	32	1440	AT121M016E080PTC ⌐¬
	270	8	9	43.2	16	23	1970	AT271M016F090PTD ⌐¬
	330	8	11.5	52.8	16	20	2340	AT331M016F115PTD ⌐¬
	470	10	10	75.2	16	18	2620	AT471M016G100PTA ⌐¬
	560	10	12.5	89.6	16	14	3030	AT561M016G125PTA ⌐¬
	1500	10	18	240.0	16	12	4000	AT152M016G180PTA ⌐¬
25	68	6.3	8	17.0	16	35	1380	AT680M025E080PTC ⌐¬
	150	8	9	37.5	16	25	1880	AT151M025F090PTD ⌐¬
	220	8	11.5	55.0	16	22	2230	AT221M025F115PTD ⌐¬
	270	10	10	67.5	16	19	2500	AT271M025G100PTA ⌐¬
	330	10	12.5	82.5	16	14	2890	AT331M025G125PTA ⌐¬
	1000	10	18	250.0	16	12	4000	AT102M025G180PTA ⌐¬
35	47	6.3	8	16.5	16	45	1280	AT470M035E080PTC ⌐¬
	100	8	9	35.0	16	28	1780	AT101M035F090PTD ⌐¬
	150	8	11.5	52.5	16	25	2100	AT151M035F115PTD ⌐¬
	150	10	10	52.5	16	20	2440	AT151M035G100PTA ⌐¬
	220	10	12.5	77.0	16	15	2800	AT221M035G125PTA ⌐¬
	680	10	18	238.0	16	14	3700	AT681M035G180PTA ⌐¬
40	27	6.3	8	10.8	16	48	1230	AT270M040E080PTC ⌐¬
	56	8	9	22.4	16	30	1710	AT560M040F090PTD ⌐¬
	82	8	11.5	32.8	16	27	2000	AT820M040F115PTD ⌐¬
	100	10	10	40.0	16	21	2360	AT101M040G100PTA ⌐¬
	120	10	10	48.0	16	20	2400	AT121M040G100PTA ⌐¬
	180	10	12.5	72.0	16	18	2550	AT181M040G125PTA ⌐¬
50	15	6.3	8	7.5	16	80	960	AT150M050E080PTC ⌐¬
	33	8	9	16.5	16	35	1330	AT330M050F090PTD ⌐¬
	47	8	11.5	23.5	16	30	1520	AT470M050F115PTD ⌐¬
	56	10	10	28.0	16	30	1850	AT560M050G100PTA ⌐¬
	82	10	12.5	41.0	16	25	2120	AT820M050G125PTA ⌐¬
	220	10	18	110.0	16	15	3500	AT221M050G180PTA ⌐¬
63	10	6.3	8	6.3	16	100	840	AT100M063E080PTC ⌐¬
	22	8	9	13.9	16	40	1240	AT220M063F090PTD ⌐¬
	27	8	11.5	17	16	35	1400	AT270M063F115PTD ⌐¬
	33	10	10	20.8	16	35	1680	AT330M063G100PTA ⌐¬
	47	10	10	29.6	16	35	1680	AT470M063G100PTA ⌐¬
	56	10	12.5	35.3	16	30	1920	AT560M063G125PTA ⌐¬
	150	10	18	94.5	16	18	3200	AT151M063G180PTA ⌐¬
80	8.2	8	9	6.6	16	90	840	AT8R2M080F090PTD ⌐¬
	15	8	11.5	12	16	70	1120	AT150M080F115PTD ⌐¬
	12	10	10	9.6	16	70	1280	AT120M080G100PTA ⌐¬
	15	10	10	12	16	70	1280	AT150M080G100PTA ⌐¬
	18	10	12.5	14.4	16	60	1460	AT180M080G125PTA ⌐¬

⌐¬ see description at end of standard ratings

Part number shows taped version with straight leads and Ammo Pack packaging.

See "PACKAGING INFORMATION" for further lead treatment options.

For further information please contact sales@capxon.org

STANDARD RATINGS

V_R (V)	C_R (µF)	ø D (mm)	L (mm)	I_{LEAK} (µA, 2min)	tanδ +20°C ▪ 120Hz (%)	Max. ESR +20°C ▪ 100kHz (mΩ)	I_R ▪ Max. Ripple Current +125°C ▪ 100kHz (mA rms)	CapXon Part Number
100	8.2	8	9	8.2	16	100	800	AT8R2M100F090PTD ⬚
	10	8	11.5	10	16	80	1040	AT100M100F115PTD ⬚
	10	10	10	10	16	80	1160	AT100M100G100PTA ⬚
	12	10	10	12	16	80	1160	AT120M100G100PTA ⬚
	15	10	12.5	15	16	70	1320	AT150M100G125PTA ⬚
	47	10	12.5	15	16	70	1320	AT470M100G125PTA ⬚

⬚: Leave **blank** for Standard type ⬚: Enter **X** for AEC-Q200 type

Part number shows taped version with straight leads and Ammo Pack packaging.

See "PACKAGING INFORMATION" for further lead treatment options.

MULTIPLIER K_f for RIPPLE CURRENT vs. FREQUENCY

Frequency (Hz)	120 ≤ Freq. < 1k	1k ≤ Freq. < 10k	10k ≤ Freq. < 100k	100k ≤ Freq. < 300k
Coefficient K_f	0.1	0.3	0.6	1

PRECAUTIONS, GUIDELINES AND PACKAGING INFORMATON

Unless otherwise agreed in individual specifications, all products are subject to our "General Precautions and Guidelines" as well as our "Packaging Information". Please refer to the following links in the table.

General Precautions and Guidelines	Packaging Information Hybrid Radial
Page 837	Page 828

DISCLAIMER

All product related data (e.g. specification, statements and general information) are subject to change without any notice. It is necessary that the customer observes all product related technical / application information and handling instructions.

CapXon products are designed and manufactured according to severe quality and safety standards. Under no circumstance, CapXon warrants that any CapXon product is suitable for the purposes intended for your application, even CapXon knows the application. It is customer's duty and obligation to check and make sure that CapXon products are suitable for the purposes intended and select the correct and proper CapXon product. Customers are requested to perform a sufficient validation and reliability evaluation to assure needed safety level and reliability performance by suitable designs and to apply proper safeguards (e.g. redundancies, protective circuits).

Particular operating conditions (ambient temperature, ripple current, voltage, thermal resistance, etc.) as well as storage, production or assembly may affect the performance and the lifetime of the capacitor. Please consult CapXon for lifetime estimation, failure mode considerations or worst-case scenarios according to the product technology, product tolerances / deviations or change of the characteristics of the capacitor due to shipment, storage, handling, production and usage.

For aerospace or military application, life-saving, life-sustaining, safety critical applications or any application where failure may cause severe personal injury or death, please consult us before design-in the capacitor in your application.

Except for the written expressed warranties, CapXon does not impliedly, by assumption or whatever else, warrant, undertake, promise any other warranty or guaranty for any CapXon product.

For further information, please visit our website www.capxongroup.com or contact CapXon directly.

AK SERIES ▪ LONG LIFE AT 135°C UP TO 3 000 hours



KEY FEATURES

AEC-Q 200 · °C HIGH TEMPERATURE

- **HYBRID CONDUCTIVE POLYMER** ▪ THT type
- Endurance: 135°C ▪ 2 000 to 3 000 hours
- Low ESR and high ripple current
- Superior electrical stability over application lifetime
- AEC-Q200 version available

HF Halogen Free · RoHS & REACH COMPLIANT

SPECIFICATIONS

Items		Performance Characteristics
Operating Temperature Range		-55 ~ +135°C
Rated Voltage Range	V_R	16 ~ 100V DC
Surge Voltage	V_S	($V_R \le 100V$): $V_S = 1.25 \cdot V_R$
Capacitance Range	C_R	8.2 ~ 560µF
Cap. Tolerance	ΔC	±20% (120Hz ▪ 20°C)
Leakage Current (20°C ▪ V_R applied)	I_{LEAK}	Not to exceed the values shown in standard ratings After 2 minutes
Dissipation Factor % (20°C ▪ 120Hz)	tanδ	Not to exceed the values shown in standard ratings
Equivalent Series Resistance (20°C ▪ 100kHz)	ESR	Not to exceed the values shown in standard ratings

Lifetime Test			
Endurance 135°C (V_R & I_R applied)	Test	**3 000 hours**	≥ Ø 8
		2 000 hours	≤ Ø 6.3
	△C/C_R	Within ±30% of the initial value	
	tanδ	Less than 200% of the specified value	
	ESR	Less than 200% of the specified value	
	I_{Leak}	Less than the specified value	

DIMENSIONS ▪ All dimensions in mm

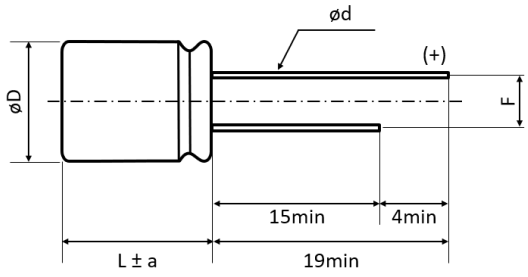

ø D	L	ØD±0.5	a	F±0.5	Ød±0.05
6.3	8	6.3	1	2.5	0.6
8	9	8	1.5	3.5	0.6
8	11.5	8	1.5	3.5	0.6
10	10	10	1.5	5	0.6
10	12.5	10	1.5	5	0.6

For further information please contact sales@capxon.org

STANDARD RATINGS

V_R (V)	C_R (µF)	ø D (mm)	L (mm)	I_{LEAK} (µA, 2min)	tanδ +20°C ▪ 120Hz (%)	Max. ESR +20°C ▪ 100kHz (mΩ)	I_R ▪ Max. Ripple Current +135°C ▪ 100kHz (mA rms)	CapXon Part Number
16	120	6.3	8	19.2	16	32	1440	AK121M016E080PTC ☐
	270	8	9	43.2	16	23	1970	AK271M016F090PTD ☐
	330	8	11.5	52.8	16	20	2340	AK331M016F115PTD ☐
	470	10	10	75.2	16	18	2620	AK471M016G100PTA ☐
	560	10	12.5	89.6	16	14	3030	AK561M016G125PTA ☐
25	68	6.3	8	17.0	16	35	1380	AK680M025E080PTC ☐
	150	8	9	37.5	16	25	1880	AK151M025F090PTD ☐
	220	8	11.5	55.0	16	22	2230	AK221M025F115PTD ☐
	270	10	10	67.5	16	19	2500	AK271M025G100PTA ☐
	330	10	12.5	82.5	16	14	2890	AK331M025G125PTA ☐
35	47	6.3	8	16.5	16	45	1280	AK470M035E080PTC ☐
	100	8	9	35.0	16	28	1780	AK101M035F090PTD ☐
	150	8	11.5	52.5	16	25	2100	AK151M035F115PTD ☐
	150	10	10	52.5	16	20	2440	AK151M035G100PTA ☐
	220	10	12.5	77.0	16	15	2800	AK221M035G125PTA ☐
40	27	6.3	8	10.8	16	48	1230	AK270M040E080PTC ☐
	56	8	9	22.4	16	30	1710	AK560M040F090PTD ☐
	82	8	11.5	32.8	16	27	2000	AK820M040F115PTD ☐
	100	10	10	40.0	16	21	2360	AK101M040G100PTA ☐
	120	10	10	48.0	16	20	2400	AK121M040G100PTA ☐
	180	10	12.5	72.0	16	18	2550	AK181M040G125PTA ☐
50	15	6.3	8	7.5	16	80	960	AK150M050E080PTC ☐
	33	8	9	16.5	16	35	1330	AK330M050F090PTD ☐
	47	8	11.5	23.5	16	30	1520	AK470M050F115PTD ☐
	56	10	10	28.0	16	30	1850	AK560M050G100PTA ☐
	82	10	12.5	41.0	16	25	2120	AK820M050G125PTA ☐
63	10	6.3	8	6.3	16	100	840	AK100M063E080PTC ☐
	22	8	9	13.9	16	40	1240	AK220M063F090PTD ☐
	27	8	11.5	17.0	16	35	1400	AK270M063F115PTD ☐
	33	10	10	20.8	16	35	1680	AK330M063G100PTA ☐
	47	10	10	29.6	16	35	1680	AK470M063G100PTA ☐
	56	10	12.5	35.3	16	30	1920	AK560M063G125PTA ☐
80	8.2	8	9	6.6	16	90	840	AK8R2M080F090PTD ☐
	15	8	11.5	12.0	16	70	1120	AK150M080F115PTD ☐
	12	10	10	9.6	16	70	1280	AK120M080G100PTA ☐
	15	10	10	12.0	16	70	1280	AK150M080G100PTA ☐
	18	10	12.5	14.4	16	60	1460	AK180M080G125PTA ☐
100	8.2	8	9	8.2	16	100	800	AK8R2M100F090PTD ☐
	10	8	11.5	10.0	16	80	1040	AK100M100F115PTD ☐
	10	10	10	10.0	16	80	1160	AK100M100G100PTA ☐
	12	10	10	12.0	16	80	1160	AK120M100G100PTA ☐
	15	10	12.5	15.0	16	70	1320	AK150M100G125PTA ☐

☐: Leave **blank** for Standard type ☐: Enter **X** for AEC-Q200 type

Part number shows taped version with straight leads and Ammo Pack packaging.
See "PACKAGING INFORMATION" for further lead treatment options.

For further information please contact sales@capxon.org

MULTIPLIER K_f for RIPPLE CURRENT vs. FREQUENCY

Frequency (Hz)	120 ≤ Freq. < 1k	1k ≤ Freq. < 10k	10k ≤ Freq. < 100k	100k ≤ Freq. < 300k
Coefficient K_f	0.1	0.3	0.6	1

PRECAUTIONS, GUIDELINES AND PACKAGING INFORMATON

Unless otherwise agreed in individual specifications, all products are subject to our “General Precautions and Guidelines” as well as our “Packaging Information”. Please refer to the following links in the table.

General Precautions and Guidelines	Packaging Information Hybrid Radial
Page 837	Page 828

DISCLAIMER

All product related data (e.g. specification, statements and general information) are subject to change without any notice. It is necessary that the customer observes all product related technical / application information and handling instructions.

CapXon products are designed and manufactured according to severe quality and safety standards. Under no circumstance, CapXon warrants that any CapXon product is suitable for the purposes intended for your application, even CapXon knows the application. It is customer's duty and obligation to check and make sure that CapXon products are suitable for the purposes intended and select the correct and proper CapXon product. Customers are requested to perform a sufficient validation and reliability evaluation to assure needed safety level and reliability performance by suitable designs and to apply proper safeguards (e.g. redundancies, protective circuits).

Particular operating conditions (ambient temperature, ripple current, voltage, thermal resistance, etc.) as well as storage, production or assembly may affect the performance and the lifetime of the capacitor. Please consult CapXon for lifetime estimation, failure mode considerations or worst-case scenarios according to the product technology, product tolerances / deviations or change of the characteristics of the capacitor due to shipment, storage, handling, production and usage.

For aerospace or military application, life-saving, life-sustaining, safety critical applications or any application where failure may cause severe personal injury or death, please consult us before design-in the capacitor in your application.

Except for the written expressed warranties, CapXon does not impliedly, by assumption or whatever else, warrant, undertake, promise any other warranty or guaranty for any CapXon product.

For further information, please visit our website www.capxongroup.com or contact CapXon directly.

AL SERIES ▪ HIGH TEMPERATURE TYPE 145°C



KEY FEATURES

AEC-Q 200 · HIGH TEMPERATURE

- **HYBRID CONDUCTIVE POLYMER** ▪ THT type
- Endurance: 145°C ▪ 2000 hours
- Low ESR and high ripple current
  Superior electrical stability over application lifetime
- AEC-Q200 version available

HF Halogen Free · RoHS & REACH COMPLIANT

SPECIFICATIONS

Items		Performance Characteristics
Operating Temperature Range		-55 ~ +145°C
Rated Voltage Range	V_R	16 ~ 80V DC
Surge Voltage	V_S	($V_R \le 100V$): $V_S = 1.25 \cdot V_R$
Capacitance Range	C_R	8.2 ~ 560µF
Cap. Tolerance	ΔC	±20% (120Hz ▪ 20°C)
Leakage Current (20°C ▪ V_R applied)	I_{LEAK}	Not to exceed the values shown in standard ratings After 2 minutes
Dissipation Factor % (20°C ▪ 120Hz)	tanδ	Not to exceed the values shown in standard ratings
Equivalent Series Resistance (20°C ▪ 100kHz)	ESR	Not to exceed the values shown in standard ratings

Lifetime Test		
Endurance 145°C (V_R & I_R applied)	Test	**2000 hours**
	$\triangle C/C_R$	Within ±30% of the initial value
	tanδ	Less than 200% of the specified value
	ESR	Less than 200% of the specified value
	I_{Leak}	Less than the specified value

DIMENSIONS ▪ All dimensions in mm

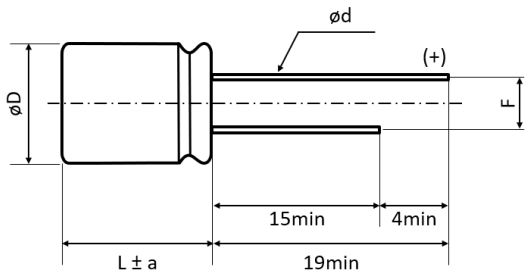

ø D	L	ØD±0.5	a	F±0.5	Ød±0.05
8	9	8	1.5	3.5	0.6
8	11.5	8	1.5	3.5	0.6
10	10	10	1.5	5	0.6
10	12.5	10	1.5	5	0.6

MULTIPLIER K_f for RIPPLE CURRENT vs. FREQUENCY

Frequency (Hz)	120 ≤ Freq. < 1k	1k ≤ Freq. < 10k	10k ≤ Freq. < 100k	100k ≤ Freq. < 300k
Coefficient K_f	0.1	0.3	0.6	1

For further information please contact sales@capxon.org

STANDARD RATINGS

V_R (V)	C_R (µF)	ø D (mm)	L (mm)	I_{LEAK} (µA, 2min)	tanδ +20°C ▪ 120Hz (%)	Max. ESR +20°C ▪ 100kHz (mΩ)	I_R ▪ Max. Ripple Current +145°C ▪ 100kHz (mA rms)	CapXon Part Number
16	270	8	9	43.2	16	25	780	AL271M016F090PTD ☐
	330	8	11.5	52.8	16	23	950	AL331M016F115PTD ☐
	470	10	10	75.2	16	20	1050	AL471M016G100PTA ☐
	560	10	12.5	89.6	16	16	1220	AL561M016G125PTA ☐
25	150	8	9	37.5	16	27	750	AL151M025F090PTD ☐
	220	8	11.5	55	16	25	900	AL221M025F115PTD ☐
	270	10	10	67.5	16	22	1000	AL271M025G100PTA ☐
	330	10	12.5	82.5	16	16	1150	AL331M025G125PTA ☐
35	100	8	9	16.5	16	30	700	AL101M035F090PTD ☐
	150	8	11.5	35	16	27	850	AL151M035F115PTD ☐
	150	10	10	52.5	16	23	950	AL151M035G100PTA ☐
	220	10	12.5	77	16	18	1100	AL221M035G125PTA ☐
40	56	8	9	22.4	16	30	660	AL560M040F090PTD ☐
	82	8	11.5	32.8	16	27	800	AL820M040F115PTD ☐
	100	10	10	40	16	25	920	AL101M040G100PTA ☐
	120	10	10	48	16	23	920	AL121M040G100PTA ☐
	180	10	12.5	48	16	20	1040	AL181M040G125PTA ☐
50	33	8	9	16.5	16	35	620	AL330M050F090PTD ☐
	47	8	11.5	23.5	16	28	730	AL570M050F115PTD ☐
	56	10	10	28	16	28	880	AL560M050G100PTA ☐
	82	10	12.5	41	16	25	1040	AL820M050G125PTA ☐
63	22	8	9	13.9	16	40	600	AL220M063F090PTD ☐
	27	8	11.5	17	16	35	700	AL270M063F115PTD ☐
	33	10	10	20.8	16	30	850	AL330M063G100PTA ☐
	47	10	10	29.6	16	30	850	AL470M063G100PTA ☐
	56	10	12.5	35.3	16	25	950	AL560M063G125PTA ☐
80	8.2	8	9	6.6	16	90	450	AL8R2M080F090PTD ☐
	12	10	10	9.6	16	70	650	AL120M080G100PTA ☐
	15	8	11.5	12	16	70	550	AL150M080F115PTD ☐
	15	10	10	12	16	70	650	AL150M080G100PTA ☐
	18	10	12.5	14.4	16	50	750	AL180M080G125PTA ☐

☐: Leave **blank** for Standard type ☐: Enter **X** for AEC-Q200 type

Part number shows taped version with straight leads and Ammo Pack packaging.

See "PACKAGING INFORMATION" for further lead treatment options.

For further information please contact sales@capxon.org

PRECAUTIONS, GUIDELINES AND PACKAGING INFORMATON

Unless otherwise agreed in individual specifications, all products are subject to our “General Precautions and Guidelines” as well as our “Packaging Information”. Please refer to the following links in the table.

	
General Precautions and Guidelines	Packaging Information Hybrid Radial
Page 837	Page 828

DISCLAIMER

All product related data (e.g. specification, statements and general information) are subject to change without any notice. It is necessary that the customer observes all product related technical / application information and handling instructions.

CapXon products are designed and manufactured according to severe quality and safety standards. Under no circumstance, CapXon warrants that any CapXon product is suitable for the purposes intended for your application, even CapXon knows the application. It is customer's duty and obligation to check and make sure that CapXon products are suitable for the purposes intended and select the correct and proper CapXon product. Customers are requested to perform a sufficient validation and reliability evaluation to assure needed safety level and reliability performance by suitable designs and to apply proper safeguards (e.g. redundancies, protective circuits).

Particular operating conditions (ambient temperature, ripple current, voltage, thermal resistance, etc.) as well as storage, production or assembly may affect the performance and the lifetime of the capacitor. Please consult CapXon for lifetime estimation, failure mode considerations or worst-case scenarios according to the product technology, product tolerances / deviations or change of the characteristics of the capacitor due to shipment, storage, handling, production and usage.

For aerospace or military application, life-saving, life-sustaining, safety critical applications or any application where failure may cause severe personal injury or death, please consult us before design-in the capacitor in your application.

Except for the written expressed warranties, CapXon does not impliedly, by assumption or whatever else, warrant, undertake, promise any other warranty or guaranty for any CapXon product.

For further information, please visit our website www.capxongroup.com or contact CapXon directly.

AM SERIES ▪ HIGH TEMPERATURE TYPE 150°C



KEY FEATURES

AEC-Q 200 · HIGH TEMPERATURE

- **HYBRID CONDUCTIVE POLYMER** ▪ THT type
- Endurance: 150°C ▪ 1000 hours
- Low ESR and high ripple current
- Superior electrical stability over application lifetime
- AEC-Q200 version available

HF Halogen Free · RoHS & REACH COMPLIANT

SPECIFICATIONS

Items		Performance Characteristics
Operating Temperature Range		-55 ~ +150°C
Rated Voltage Range	V_R	16 ~ 80V DC
Surge Voltage	V_S	($V_R \le 100V$): $V_S = 1.25 \cdot V_R$
Capacitance Range	C_R	8.2 ~ 560µF
Cap. Tolerance	ΔC	±20% (120Hz ▪ 20°C)
Leakage Current (20°C ▪ V_R applied)	I_{LEAK}	Not to exceed the values shown in standard ratings After 2 minutes
Dissipation Factor % (20°C ▪ 120Hz)	tanδ	Not to exceed the values shown in standard ratings
Equivalent Series Resistance (20°C ▪ 100kHz)	ESR	Not to exceed the values shown in standard ratings

Lifetime Test		
Endurance 150°C (V_R & I_R applied)	Test	**1000 hours**
	$\triangle C/C_R$	Within ±30% of the initial value
	tanδ	Less than 200% of the specified value
	ESR	Less than 200% of the specified value
	I_{Leak}	Less than the specified value

DIMENSIONS ▪ All dimensions in mm

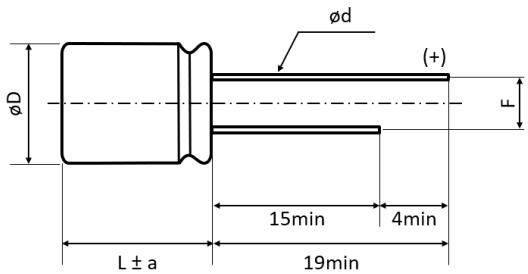

ø D	L	ØD±0.5	a	F±0.5	Ød±0.05
8	9	8	1.5	3.5	0.6
8	11.5	8	1.5	3.5	0.6
10	10	10	1.5	5	0.6
10	12.5	10	1.5	5	0.6

MULTIPLIER K_f for RIPPLE CURRENT vs. FREQUENCY

Frequency (Hz)	120 ≤ Freq. < 1k	1k ≤ Freq. < 10k	10k ≤ Freq. < 100k	100k ≤ Freq. < 300k
Coefficient K_f	0.1	0.3	0.6	1

For further information please contact sales@capxon.org

STANDARD RATINGS

V_R (V)	C_R (µF)	ø D (mm)	L (mm)	I_{LEAK} (µA, 2min)	tanδ +20°C ▪ 120Hz (%)	Max. ESR +20°C ▪ 100kHz (mΩ)	I_R ▪ Max. Ripple Current +150°C ▪ 100kHz (mA rms)	CapXon Part Number
16	270	8	9	43.2	16	25	770	AM271M016F090PTD ☐
	330	8	11.5	52.8	16	23	800	AM331M016F115PTD ☐
	470	10	10	75.2	16	20	880	AM471M016G100PTA ☐
	560	10	12.5	89.6	16	16	1010	AM561M016G125PTA ☐
25	150	8	9	37.5	16	27	750	AM151M025F090PTD ☐
	220	8	11.5	55.0	16	25	770	AM221M025F115PTD ☐
	270	10	10	67.5	16	22	850	AM271M025G100PTA ☐
	330	10	12.5	82.5	16	16	970	AM331M025G125PTA ☐
35	100	8	9	16.5	16	30	710	AM101M035F090PTD ☐
	150	8	11.5	35.0	16	27	730	AM151M035F115PTD ☐
	150	10	10	52.5	16	23	830	AM151M035G100PTA ☐
	220	10	12.5	77.0	16	18	950	AM221M035G125PTA ☐
40	56	8	9	22.4	16	30	650	AM560M040F090PTD ☐
	82	8	11.5	32.8	16	27	660	AM820M040F115PTD ☐
	100	10	10	40.0	16	25	720	AM101M040G100PTA ☐
	120	10	10	48.0	16	23	740	AM121M040G100PTA ☐
	180	10	12.5	48.0	16	20	850	AM181M040G125PTA ☐
50	33	8	9	16.5	16	35	550	AM330M050F090PTD ☐
	47	8	11.5	23.5	16	28	620	AM470M050F115PTD ☐
	56	10	10	28.0	16	28	660	AM560M050G100PTA ☐
	82	10	12.5	41.0	16	25	720	AM820M050G125PTA ☐
63	22	8	9	13.9	16	40	520	AM220M063F090PTD ☐
	27	8	11.5	17.0	16	35	540	AM270M063F115PTD ☐
	33	10	10	20.8	16	30	570	AM330M063G100PTA ☐
	47	10	10	29.6	16	30	570	AM470M063G100PTA ☐
	56	10	12.5	35.3	16	25	620	AM560M063G125PTA ☐
80	8.2	8	9	6.6	16	90	320	AM8R2M080F090PTD ☐
	12	10	10	9.6	16	70	440	AM120M080G100PTA ☐
	15	8	11.5	12.0	16	70	410	AM150M080F115PTD ☐
	15	10	10	12.0	16	70	440	AM150M080G100PTA ☐
	18	10	12.5	14.4	16	50	480	AM180M080G125PTA ☐

☐: Leave **blank** for Standard type ☐: Enter **X** for AEC-Q200 type

Part number shows taped version with straight leads and Ammo Pack packaging.

See "PACKAGING INFORMATION" for further lead treatment options.

For further information please contact sales@capxon.org

PRECAUTIONS, GUIDELINES AND PACKAGING INFORMATON

Unless otherwise agreed in individual specifications, all products are subject to our “General Precautions and Guidelines” as well as our “Packaging Information”. Please refer to the following links in the table.

	
General Precautions and Guidelines	Packaging Information Hybrid Radial
Page 837	Page 828

DISCLAIMER

All product related data (e.g. specification, statements and general information) are subject to change without any notice. It is necessary that the customer observes all product related technical / application information and handling instructions.

CapXon products are designed and manufactured according to severe quality and safety standards. Under no circumstance, CapXon warrants that any CapXon product is suitable for the purposes intended for your application, even CapXon knows the application. It is customer's duty and obligation to check and make sure that CapXon products are suitable for the purposes intended and select the correct and proper CapXon product. Customers are requested to perform a sufficient validation and reliability evaluation to assure needed safety level and reliability performance by suitable designs and to apply proper safeguards (e.g. redundancies, protective circuits).

Particular operating conditions (ambient temperature, ripple current, voltage, thermal resistance, etc.) as well as storage, production or assembly may affect the performance and the lifetime of the capacitor. Please consult CapXon for lifetime estimation, failure mode considerations or worst-case scenarios according to the product technology, product tolerances / deviations or change of the characteristics of the capacitor due to shipment, storage, handling, production and usage.

For aerospace or military application, life-saving, life-sustaining, safety critical applications or any application where failure may cause severe personal injury or death, please consult us before design-in the capacitor in your application.

Except for the written expressed warranties, CapXon does not impliedly, by assumption or whatever else, warrant, undertake, promise any other warranty or guaranty for any CapXon product.

For further information, please visit our website www.capxongroup.com or contact CapXon directly.

PRODUCT CODE ▪ RADIAL HYBRID CONDUCTIVE POLYMER CAPACITORS

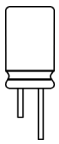

THT type example:
AT series ▪ 47µF ▪ 50V ▪ ±20% ▪ Ø 8mm ▪ L 11.5mm ▪ P 3.5mm ▪ Tape Ammo ▪ AEC-Q200

1	2	3	4	5	6	7	8	9	10	11	12	13	14	15	16	17	18	19	20
A	T	4	7	0	M	0	5	0	F	1	1	5	P	T	D	X	-	-	-
Series		Capacitance			Capacitance tolerance	Voltage			Case Ø (mm)	Height (mm)			Type code	Taping / lead treatment *		Special requirement			

Code	µF
010	1
4R7	4.7
100	10
101	100
102	1000
152	1500

Code	%
M	±20

Code	Volt
016	16
025	25
035	35
040	40
050	50
063	63
080	80
100	100
250	250
400	400

Code	ØD
E	6.3
F	8
G	10

Code	H
080	8
090	9
100	10
115	11.5
125	12.5
180	18

Code	Type
P	Polymer

Code	Pitch (mm)
TC	2.5
TD	3.5
TA	5

Code	Special
X	AEC-Q200

See datasheet for reference

* See chapter taping or lead treatment for further information
Please consult CapXon for further assistance

MARKING ▪ RADIAL HYBRID POLYMER CAPACITORS

Hybrid Polymer Capacitor ▪ Radial type

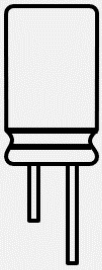

CapXon:	Manufacturer trademark
47:	Nominal capacitance (µF)
50V:	Rated voltage (V) ▪ Standard type
50X:	Rated voltage (V) ▪ AEC-Q200 type
▬	(-) polarity (Cathode indicate)
AT:	AT Series
003:	Production datacode year/week (ex. 2020/3rd week)

Top view Standard type



Top view AEC-Q200 type



0 03
Production week
Last digit of the year

For further information please contact sales@capxon.org

TAPING ▪ RADIAL HYBRID POLYMER CAPACITORS ▪ AMMO PACK

Taping ▪ ØD ≥6.3mm ▪ standard lead space

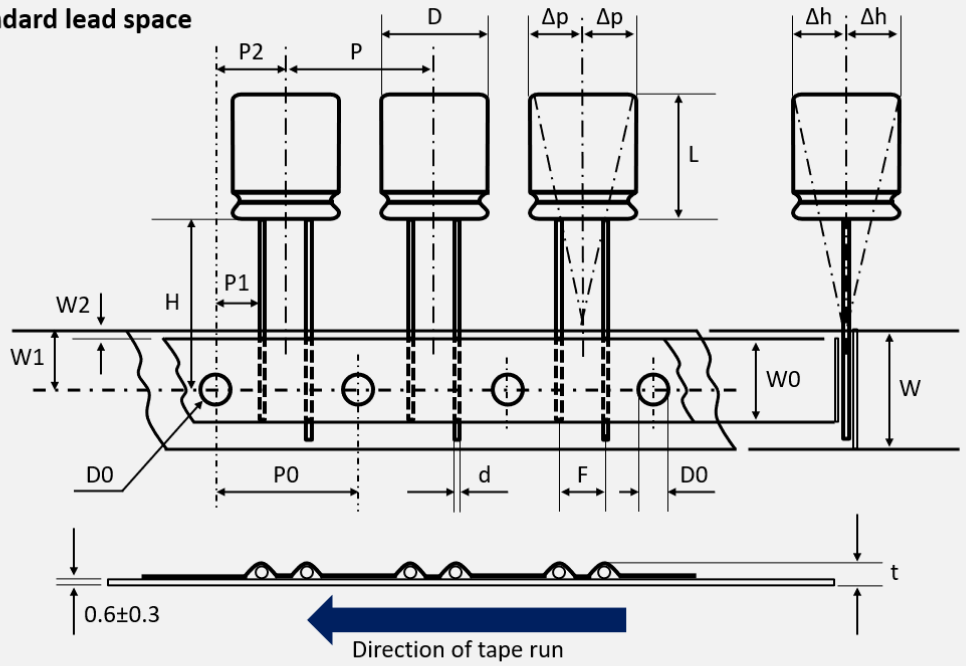

Example

A S	2 2 1	M	0 2 5	F	1 1 5	P	T D	- - - -
Series	Capacitance	Tolerance	Voltage	ØD (mm)	Height (mm)	Type code	Lead treatment	Special requirement

All dimensions in mm

	D	L	d	P	P0	P1	P2	F	W	W0	W1	W2	H	D0	Δh	Δp	t	Code
Tol	±0.5	-	±0.02	±1.0	±0.2	±0.7	±1.3	+0.4 -0.2	±0.5	±0.5	±0.5	Max	+0.75 -0.5	±0.2	Max	Max	Max	
Item	6.3	8 (±1)	0.6	12.7	12.7	5.1	6.35	**2.5**	18	11	9	2	18.5	4	1	1	1.5	TC
	8	9 (±1.5) 11.5 (±1.5)	0.6	12.7	12.7	4.6	6.35	**3.5**	18	11	9	2	18.5	4	1	1	1.5	TD
	10	10 (±1.5) 12.5 (±1.5) 18 (±2)	0.6	12.7	12.7	3.85	6.35	**5**	18	11	9	2	18.5	4	1	1	1.5	TA

The negative lead (cathode) is in the front, i.e. in the direction of tape run.

For further information please contact sales@capxon.org

TAPING ▪ RADIAL HYBRID POLYMER CAPACITORS ▪ AMMO PACK

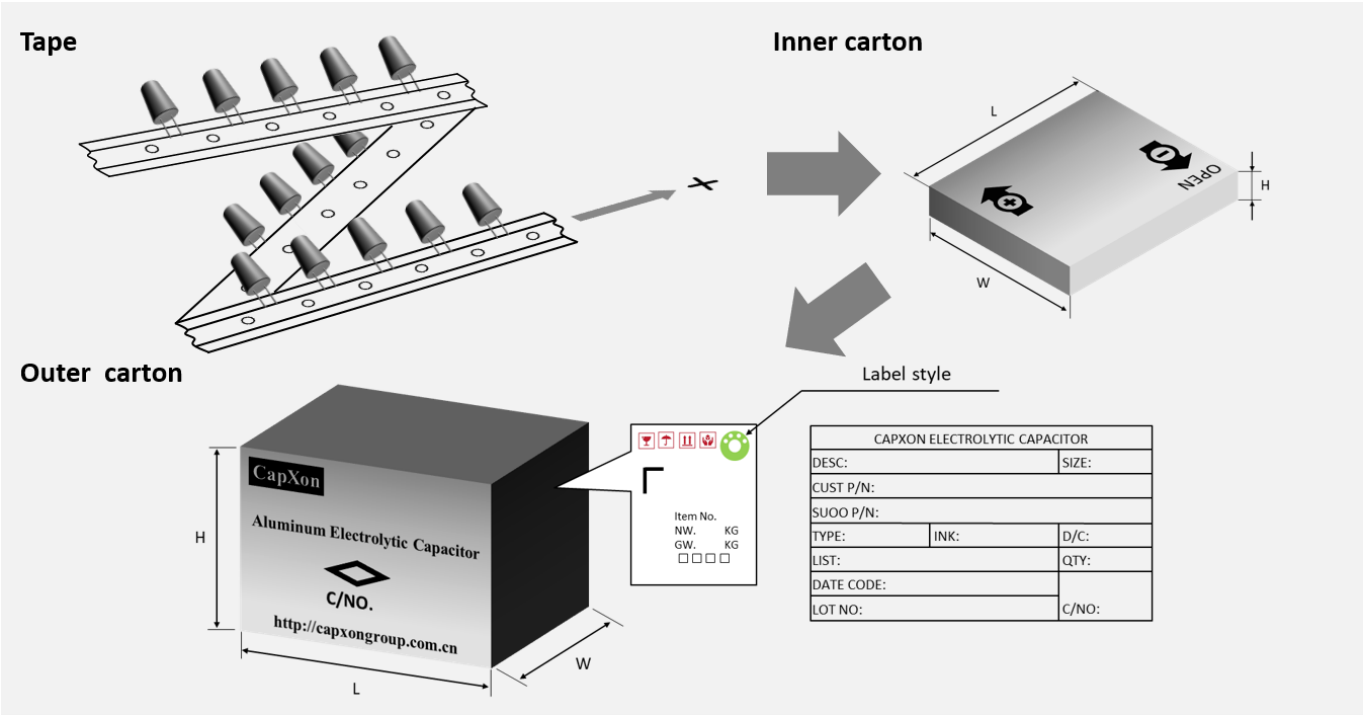

Ø D (mm)	Length L (mm)	Inner box quantity (pcs)	Inner box size L x W x H (mm)	Outer box quantity (pcs)	Outer box size L x W x H (mm)	Country of origin	Tariff number
6.3	8	1500	331 x 227 x 51	15000	474 x 343 x 285	China	85322200
8	9 to 11.5	800	331 x 227 x 51	8000	474 x 343 x 285	China	85322200
10	10 to 12.5	600	331 x 227 x 51	6000	474 x 343 x 285	China	85322200
	18	500	331 x 227 x 51	5000	474 x 343 x 285	China	85322200

For further information please contact sales@capxon.org

TAPING ▪ RADIAL HYBRID POLYMER CAPACITORS ▪ REEL PACK

Taping ▪ ØD ≥6.3mm ▪ standard lead space

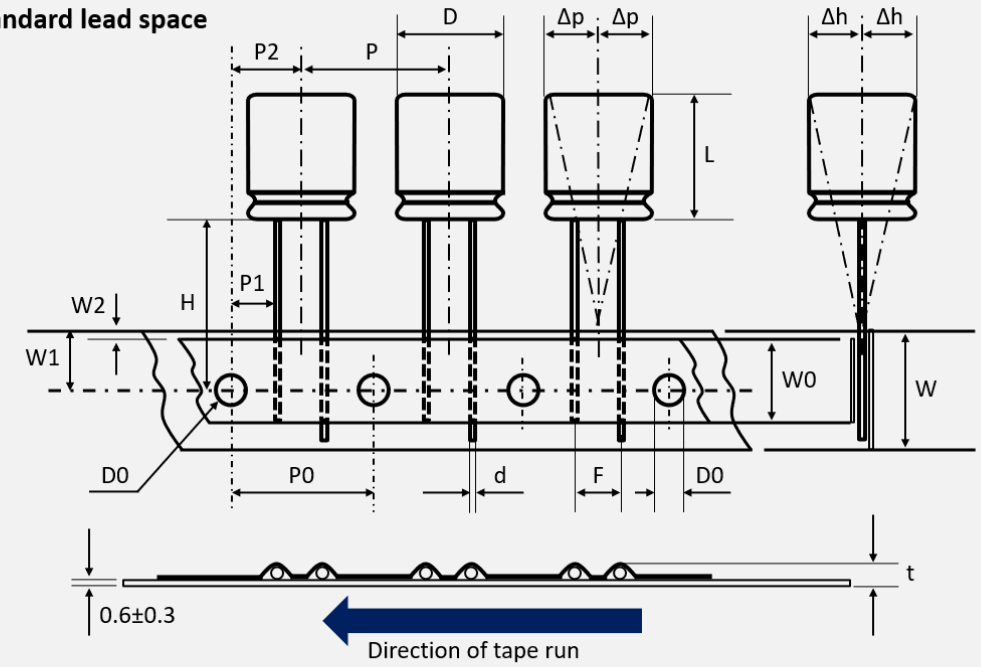

Example

A S	2 2 1	M	0 2 5	F	1 1 5	P	R D	- - - -
Series	Capacitance	Tolerance	Voltage	ØD (mm)	Height (mm)	Type code	Lead treatment	Special requirement

All dimensions in mm

	D	L	d	P	P0	P1	P2	F	W	W0	W1	W2	H	D0	Δh	Δp	t	Code
Tol	±0.5	-	±0.02	±1.0	±0.2	±0.7	±1.3	+0.4 -0.2	±0.5	±0.5	±0.5	Max	+0.75 -0.5	±0.2	Max	Max	Max	
Item	6.3	8 (±1)	0.6	12.7	12.7	5.1	6.35	**2.5**	18	11	9	2	18.5	4	1	1	1.5	RC
	8	9 (±1.5) 11.5 (±1.5)	0.6	12.7	12.7	4.6	6.35	**3.5**	18	11	9	2	18.5	4	1	1	1.5	RD
	10	10 (±1.5) 12.5 (±1.5) 18 (±2)	0.6	12.7	12.7	3.85	6.35	**5**	18	11	9	2	18.5	4	1	1	1.5	RA

The negative lead (cathode) is in the front, i.e. in the direction of tape run.

For further information please contact sales@capxon.org

TAPING ▪ RADIAL HYBRID POLYMER CAPACITORS ▪ REEL PACK

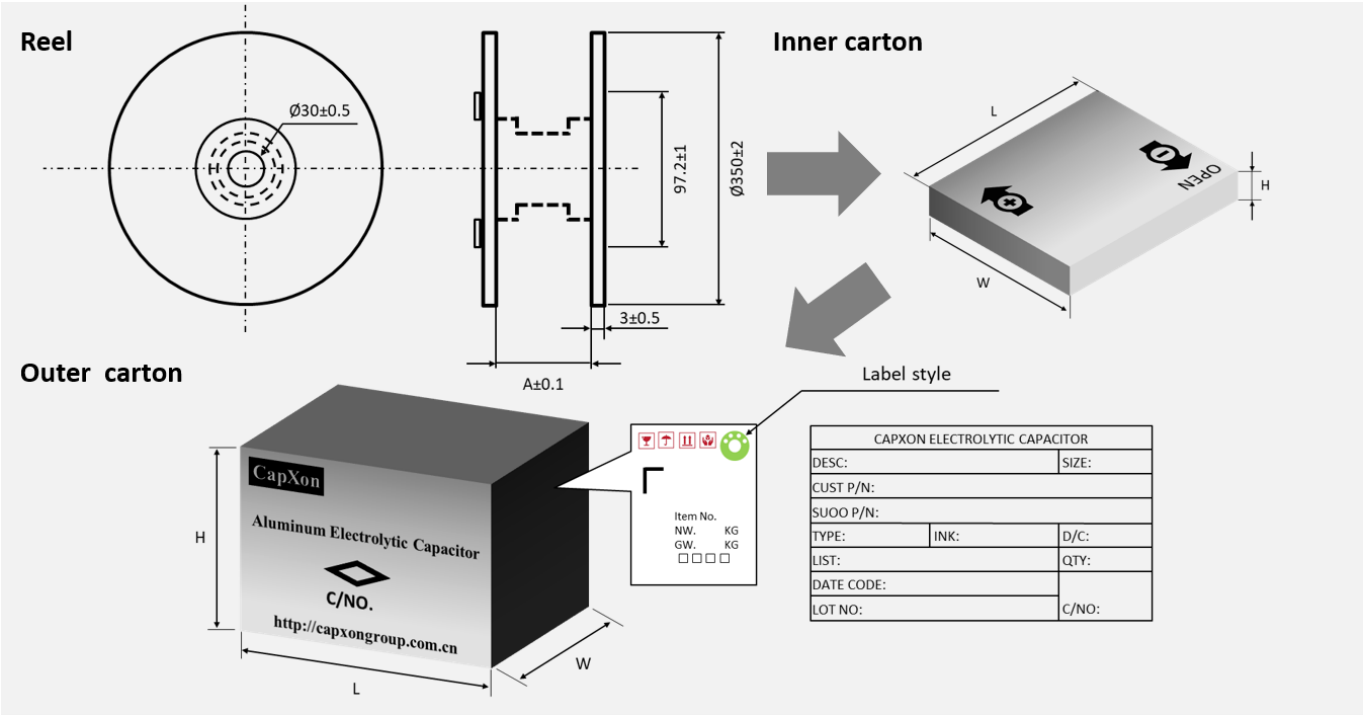

Ø D (mm)	Length L (mm)	A (mm)	Inner box quantity (pcs)	Inner box size L x W x H (mm)	Outer box quantity (pcs)	Outer box size L x W x H (mm)	Country of origin	Tariff number
6.3	8	45	1000	350 x 350 x 105	6000	375 x 375 x 343	China	85322200
8	9 to 11.5	45	800	350 x 350 x 105	4800	375 x 375 x 343	China	85322200
10	10 to 12.5	45	600	350 x 350 x 105	3600	375 x 375 x 343	China	85322200
	18	55	600	349 x 349 x 121	3600	375 x 375 x 385	China	85322200

For further information please contact sales@capxon.org

PACKAGING ▪ RADIAL HYBRID POLYMER CAPACITORS
STRAIGHT LEADS ▪ BULK PACK

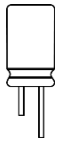

Ø D (mm)	Length L (mm)	Inner bag / Inner row (pcs)	Inner box quantity (pcs)	Inner box size L x W x H (mm)	Outer box quantity (pcs)	Outer box size L x W x H (mm)	Country of origin	Tariff number
6.3	8	600/bag	7200	295 x 181 x 222	7200	295 x 181 x 222	China	85322200
8	9	450/bag	5400	295 x 181 x 222	5400	295 x 181 x 222	China	85322200
	11.5	300/bag	3600	295 x 181 x 222	3600	295 x 181 x 222	China	85322200
10	10	300/bag	3600	295 x 181 x 222	3600	295 x 181 x 222	China	85322200
	12.5	200/bag	2400	295 x 181 x 222	2400	295 x 181 x 222	China	85322200
	18	200/bag	2400	295 x 181 x 222	2400	295 x 181 x 222	China	85322200

PACKAGING ▪ RADIAL HYBRID POLYMER CAPACITORS
CUTTED LEADS ▪ BULK PACK

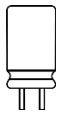

Ø D (mm)	Length L (mm)	Inner bag / Inner row (pcs)	Inner box quantity (pcs)	Cutting height (mm)	Outer box quantity (pcs)	Outer carton quantity (pcs)	Country of origin	Tariff number
6.3	8	800/bag	800/box	≤ 7	9600	9600	China	85322200
8	9	600/bag	600/box	≤ 7	7200	7200	China	85322200
	11.5	500/bag	500/box	≤ 7	6000	6000	China	85322200
10	10	400/bag	400/box	≤ 7	4800	4800	China	85322200
	12.5	300/bag	300/box	≤ 7	3600	3600	China	85322200
	18	200/bag	200/box	≤ 7	2400	2400	China	85322200

AVAILABLE LEAD TREATMENTS ▪ RADIAL HYBRID POLYMER CAPACITORS

Radial type ▪ standard lead spacing (all dimensions in mm)

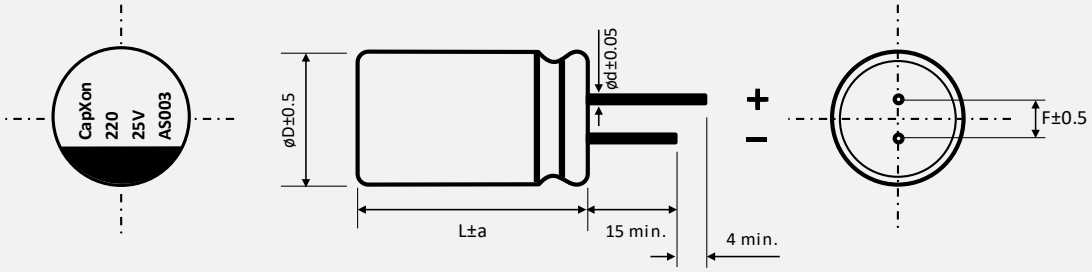

Ø D (mm)	L (mm)	a (mm)	F (mm)	Ø d (mm)
6.3	8	1	2.5	0.6
8	9	1.5	3.5	0.6
8	11.5	1.5	3.5	0.6
10	10	1.5	5	0.6
10	12.5	1.5	5	0.6
10	18	2	5	0.6

Radial type ▪ CA version ▪ cutted leads ▪ standard lead spacing

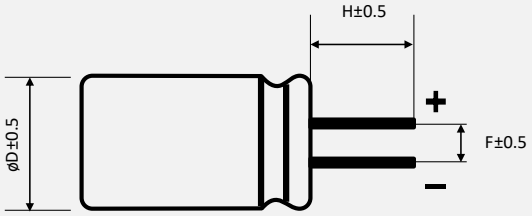

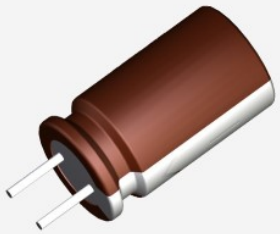

Example

Length „H" customized. See product code table customized lead length for further reference.

Ø D (mm)	6.3	8	10
F (mm)	2.5	3.5	5

A S	2 2 1	M	0 2 5	F	1 1 5	P	C A	- - - -
Series	Capacitance	Tolerance	Voltage	ØD (mm)	Height (mm)	Type code	Lead treatment	Special requirement

PRODUCT CODE TABLE ▪ CUSTOMIZED LEAD LENGTH

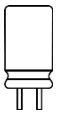

THT type example:
AS series ▪ 220µF ▪ 25V ▪ ±20% ▪ Ø 8mm ▪ L 11.5mm ▪ CA version, cutted leads ▪ P 3.5mm ▪ H 6.0mm
▪ Non-Automotive

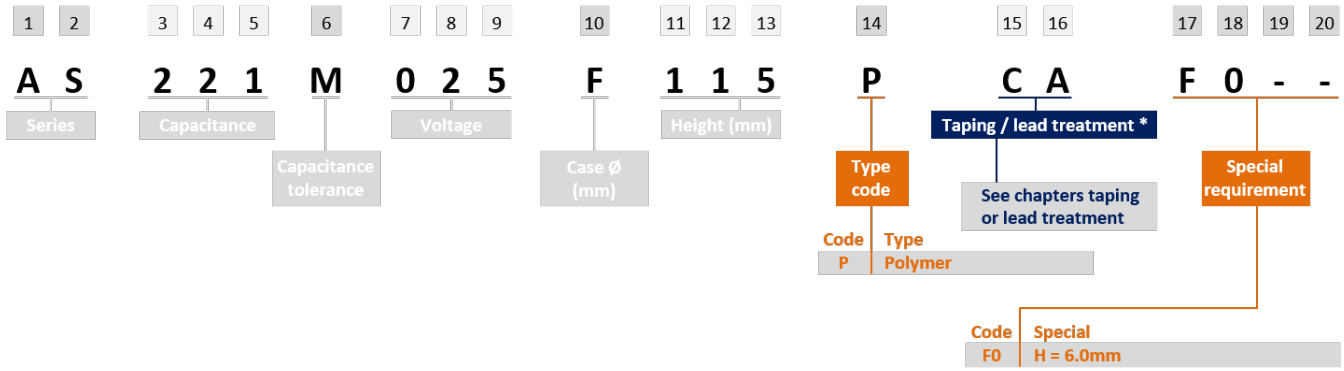

Product code 17th digit	H (mm)
A	1
B	2
C	3
D	4
E	5
F	6
G	7

Product code 18st digit	H (mm)
0	0.0
1	0.1
2	0.2
3	0.3
4	0.4
5	0.5
6	0.6
7	0.7
8	0.8
9	0.9

Example H (mm)	Product code Non-Automotive
4.0	**D0**
4.5	**D5**
5.2	**E2**
6.0	**F0**

Example H (mm)	Product code Automotive
4.0	**XD0**
4.5	**XD5**
5.2	**XE2**
6.0	**XF0**

The 17th digit is according basic ordering of the Latin alphabet and shows the measure "H" in front of the decimal separator. The 18th digit follows the numbering from 0 to 9 and shows the measure "H" after the decimal separator.

Remark for Automotive version: In the case of an AEC-Q200 qualified component, the measure "H" in front of the decimal separator moves to the 18th digit and the measure "H" after the decimal separator to the 19th digit.

For further information please contact sales@capxon.org

GENERAL PRECAUTIONS & GUIDELINES

1. GENERAL PRECAUTIONS & GUIDELINES.....837

1.1. GENERAL - ALL TYPES -.....837

1.1.1. POLARITY 837

1.1.2. OVERVOLTAGE 837

1.1.3. OPERATING TEMPERATURE.....837

1.1.4. RIPPLE CURRENT 837

1.1.5. CHARGE AND DISCHARGING.....837

1.1.6. SOLDERING CONDITIONS.....837

1.1.7. MSL – MOISTURE SENSITIVE LEVEL (ONLY FOR SMD TYPES).....837

1.1.8. RESISTANCE TO CHEMICALS AND SOLVENTS FOR WASHING, GLUING, FILLING AND COATING.....837

1.1.9. CLEANING AND WASHING 838

1.1.10. GLUING, FILLING OR COATING.....838

1.1.11. OPERATION AND ENVIRONMENT.....838

1.1.12. MECHANICAL STRESS 839

1.1.13. STORAGE 839

1.1.14. DISPOSAL.....839

1.2. ALUMINUM ELECTROLYTIC & HYBRID CONDUCTIVE POLYMER CAPACITORS - ALL MOUNTING STYLES - 839

1.2.1. VENT & VENT OPERATION AT EMERGENCY.....839

1.2.2. SLEEVE MATERIAL (NOT FOR SMD).....840

1.3. ALUMINUM ELECTROLYTIC - RADIAL TYPE -.....840

1.3.1. PIN CUTTING & BENDING 840

1.3.2. SOLDERING.....840

1.4. ALUMINUM ELECTROLYTIC CAPACITORS - SCREW TYPE - 840

1.4.1. MAINTENANCE 840

1.4.2. MOUNTING & INSTALLATION.....840

1.4.3. MOUNTING POSITION OF SCREW TYPE CAPACITORS 840

1.4.4. HORIZONTAL MOUNTING 841

1.5. SOLID CONDUCTIVE POLYMER CAPACITORS 841

1.5.1. APPLICATION RESTRICTIONS.....841

1.5.2. SUDDEN CHARGE AND DISCHARGE.....841

2. SOLDERING INSTRUCTIONS.....842

2.1. REFLOW SOLDERING ▪ SMD – ALUMINUM ELECTROLYTIC CAPACITORS 842

2.2. REFLOW SOLDERING ▪ SMD – SOLID CONDUCTIVE POLYMER CAPACITORS.....843

2.3. REFLOW SOLDERING ▪ SMD MLPC – SOLID POLYMER CONDUCTIVE CAPACITORS.....844

2.4. REFLOW SOLDERING ▪ SMD – HYBRID CONDUCTIVE POLYMER CAPACITORS.....845

2.5. WAVE SOLDERING ▪ ALL RADIAL & SNAP-IN CAPACITORS 846

For further information please contact sales@capxon.org

1. GENERAL PRECAUTIONS & GUIDELINES

In the following Precautions and Guidelines, CapXon provides instructions and requirements to assure a proper handling and desired performance of capacitors. Firstly, all general information is given, which applies to all technologies. The following chapters provides additional instructions specifically about technology and mounting style, which completes the full set of instructions.

1.1. GENERAL - ALL TYPES -

1.1.1. POLARITY

All conventional Electrolytic Capacitors have a polarity due to the internal construction. This polarity is marked on the component by printing on the top of component or on the sleeve of Aluminum Electrolytic Capacitors, including Radial, Snap-In and Screw types.

Any reverse voltage can cause short circuit breakdown of capacitor or leakage of electrolyte. Electrolytic Capacitors isn't designed for AC-voltage supply and only meant for DC-voltage applications.

For an application where polarity in circuit can be reversed or unknown, specific bi-polar aluminium electrolytic capacitors shall be used. We offer such components within our product range.

1.1.2. OVERVOLTAGE

Overvoltage can damage the capacitor and can cause a drastic increase in leakage current, which possibly shortens the lifetime of the capacitor. In a worst case, short circuit failure mode can happen. As a result, do not apply any continuous or temporary overvoltage.

The applied operating voltage, which is applied to the capacitor, should not exceed the rated voltage of the capacitor.

1.1.3. OPERATING TEMPERATURE

Only operate the capacitor within the limits of allowed temperature range, which is specified by datasheet. Be aware that the sum of thermal stress by ambient condition plus electrical stress is the main driving factor for aging. As the thermal stress level gets higher, the expected capacitor lifetime would be lower.

A drop in applied temperature, ambient condition or cooling within application can enlarge the expected lifetime of the capacitor. For details, please see further documentation of lifetime estimation.

1.1.4. RIPPLE CURRENT

The applied ripple current shall not exceed the stated max. ripple current I_R on the datasheet at the specific frequency.

When capacitors are overstressed by ripple, it can generate massive heat inside the capacitor, which can result in deterioration, vent operation or capacitor breakage.

1.1.5. CHARGE AND DISCHARGING

Frequent and quick charge / discharge generates heat inside the capacitor and can cause possible increase of leakage current, reduction of the expected lifetime, decrease of capacitance, vent operation or breakage.

For such applications please see design rules or consult our technical support for assistance.

1.1.6. SOLDERING CONDITIONS

For recommended reflow solder profile, please see additional information at Section 2. Soldering Instructions.

Soldering by vapor phase for SMD types or any hand soldering are not recommended. No permission is released by CapXon side either. In case of such a usage, customer need to validate solder result and applied component stress within their own manufacturing process.

1.1.7. MSL – MOISTURE SENSITIVE LEVEL (ONLY FOR SMD TYPES)

Our standard SMD components are rated according to JEDEC J-STD020 with MSL1. Construction of this part does not include hygroscopic critical materials and are not prone to delamination or popcorn effects. Only SMD MLPC types of the Solid Conductive Polymer components have MSL3. Moreover, only this type requires additional actions or specific handling in factory floor by customer such as handling or storing the goods after opening the package in accordance to JEDEC J-STD020.

1.1.8. RESISTANCE TO CHEMICALS AND SOLVENTS FOR WASHING, GLUING, FILLING AND COATING

Due to the wide variety of suppliers and different chemical formulas of washing, gluing, filling and coating materials, the individually used material and appliance process need to be validated by customer itself. It is not possible to provide any global material usage approval from our side.

CapXon can provide additional information, including combination of chemicals which could be critical to the component behavior and can support measurements of component performance after appliance of washing, gluing, filling or coating martials. For specific support, please kindly contact our technical support for further advices.

1.1.9. CLEANING AND WASHING

Do not wash the assembled capacitors with the following cleaning agents:

- **Xylene**
  - can cause deterioration of the rubber seal material
- **Halogenated solvents**
  - can cause corrosion and electrical failure modes
- **Petroleum based solvents**
  - can cause degeneration of the rubber seal material
- **Alkali based solvents**
  - can cause corrosion and dissolving of aluminum can
- **Acetone**
  - component marking possibly dissolve

After finishing cleaning and washing, the below points need to be verified by customer:

Dry all solvents properly from PCB as well as capacitor surface sufficiently and apply air blower or air knife, with temperatures within the temperature range of the product specification, if needed.

Monitor pH value, conductivity, specific gravity and water content of cleaning solvents to be sure of possible contaminations and pollution. Contaminations can negatively affect the performance of the capacitor.

1.1.10. GLUING, FILLING OR COATING

It is not allowed to use any gluing (adhesives), filling or coating materials, which contains halogenated solvents. Halogen ions are critical, because they can diffuse or creep in the capacitor through rubber sealing and can possibly damage the internal capacitor element /structure result in serious failure modes for the capacitor.

Additionally, please pay attention to the following points:

- Make sure that the surface of capacitor and the area between component bottom / rubber sealant is dry and clean before appliance of gluing, filling or coating material. It is important to avoid any contamination with chemical residues (e.g. flux residues, cleaning).
- Please follow and meet the stated gluing, coating, filling, heating and curing instructions from manufacturer or supplier of such materials. Be aware of possible shrinkage of such materials. Verify that the hardening was properly done and that no solvents / agents do remain.
- There should be no excessive heat nor mechanical pressure /stress at any stages from the production on customer side. Be aware of the possible material shrinkage of used material. High material shrinkage which leads to damage on capacitor is not CapXon's responsibility.
- The used materials of gluing, coating or filling can possibly react with the marking of component and this can change optical appearance such as the appearance and legibility.
- If the rubber seal surface is fully covered by gluing, filling or coating material, it is no longer possible to have a natural diffusion of gas between the inside of the capacitor and the ambient. So, to avoid such situation, it's strongly recommended to block maximum 80% of the sealed section on the bottom side of the capacitor.

Please find the example below of how gluing could be applied on Radial and Snap-In types.

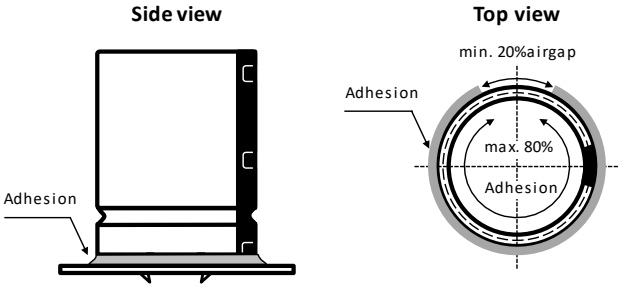

Gluing reference example of a Snap-In capacitor

1.1.11. OPERATION AND ENVIRONMENT

As long as the application is powered, in operation and cap is not discharged, the user is never permitted to touch the electric terminals of the capacitor directly or to bridge the terminals by hand or any other conductive liquid or solid material. Otherwise, a short circuit of terminals can happen and a hard discharge can damage capacitor / application as well as it can harm the operator.

Within operation, please avoid the following environmental conditions to assure proper capacitor operation:

- high vibration, shocks or mechanical stress. For tested and allowed conditions, please see available references or contact us for details
- avoid direct sunlight, ozone and any kind of radiation or ultraviolet rays
- corrosive or toxic gases (e.g. ammonium, chlorine

and compounds, bromine and compounds, hydrogen sulfide, sulfuric acid)
- ambient with high amount of damp condensation, water or types of oil

1.1.12. MECHANICAL STRESS

Best possible, avoid mechanical stress for the capacitor and do not apply any excessive mechanical stress to the lead wire pins or terminal.

After mounting, do not lift nor carry the PCB assembly by just grabbing the capacitor to pick up the board.

1.1.13. STORAGE

In case of long-term storage without applying voltage to the capacitor, leakage current tends to increase.

By applying the rated voltage before usage, the dielectric layer of aluminium oxide and leakage current can be stabilized.

If the capacitor is for more than 12 months, it is recommended to apply the DC rated voltage V_R for 30 minutes through 1kΩ protective series resistor.

The storage conditions for storage on customer side should be monitored and controlled to a temperature of 5°C up to 35°C and less than 75% rel. humidity.

1.1.14. DISPOSAL

Please follow your local governmental and organizational restrictions for disposal and if needed, contact your local responsible for correct handling.

In case of incineration, punch holes in the aluminum can in advanced to avoid explosion of capacitor and then burn with at least 800°C, otherwise it can result toxic gas.

1.2. ALUMINUM ELECTROLYTIC & HYBRID CONDUCTIVE POLYMER CAPACITORS - ALL MOUNTING STYLES -

1.2.1. VENT & VENT OPERATION AT EMERGENCY

As a safety feature, most our regular electrolytic capacitors have a so-called vent, which is a pre-determined breaking point. In case of overstressed component, it can lead to internal gassing and due to this an internal overpressure will result in vent operation. So, the vent will open to release such pressure and gas can become visible. If user detects vent operation or gassing out of the capacitor when operating, disconnect the application immediately from power supply to turn it off directly. If it can't be turned off, the capacitor or the conductive liquid / gas of electrolyte can result in short-circuits, which can dramatically damage the application.

Please notice to avoid being near with body or face above or in direction of capacitors vent when powered. When the running application is overstressed, gas leakage by vent is possible. By this gas with temperatures higher than 100°C can occur and can hurt human body and face. In such an event, if contact with skin, wash it immediately with plenty of water and soap. If contact with eyes, rinse immediately (e.g. eye shower) with plenty of water. If gas is inhaled, gargle right away with plenty of water. For all three cases, please consult a doctor for medical advices.

For proper operation of vent, consider space between the vent and covering surfaces (e.g. housing) as stated at the table below, it is strongly recommended for your mechanical construction / build-up of your product:

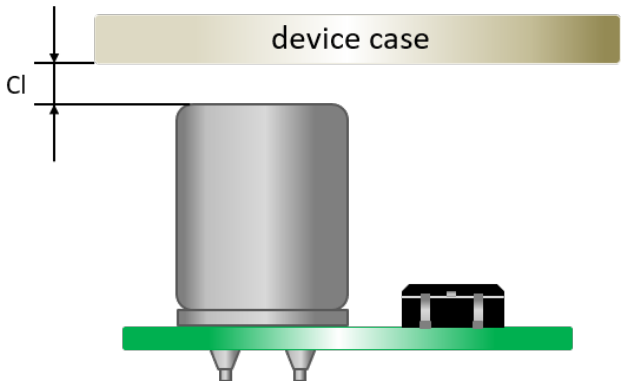

Minimum distance to be observed for the safe operation of the capacitor

Case diameter Ø	Clearance distance Cl
6.3mm to 16mm	Min. 2mm
18mm to 35mm	Min. 3mm
≥ 40mm	Min. 5mm

Recommended minimum clearance distance between topside capacitor and device case

If such a space is not provided, the vent will not operate completely or even cannot open in case of overpressure.

Case sizes which are smaller than 6.3mm in diameter have no vent on top, for these no space need to be considered.

1.2.2. SLEEVE MATERIAL (NOT FOR SMD)

The standard sleeve material for the majority of our Radial, Snap-In and Screw mounting capacitors is PET and for some series PVC is used as sleeve material. When sleeve is exposed to xylene, toluene or similar and afterwards exposed to high heat, the sleeve may be cracked or damaged.

The sleeve is not used as insulating material or layer and does not insulate capacitor to surroundings. For needed insulation, further actions need to be considered by customer and please follow our recommended design rules.

Sleeves are applied for all Aluminum Electrolytic Capacitors with Radial, Snap-In or Screw mounting and if desired for further customized solutions.

1.3. ALUMINUM ELECTROLYTIC - RADIAL TYPE -

1.3.1. PIN CUTTING & BENDING

Please take absolute care when cutting or bending pins, that the pin is fixed mechanically in direction of rubber sealant. It is necessary that the mechanical force while cutting and bending, which results in pulling or pressing force on pin, does not stress the inner construction of capacitor element or to damage the rubber sealant. Excessive pulling or pressing force on the pin with missing fixation can result in damage of internal pin to capacitor element connection and also the sealing can be weakened. So, please take care to assure appropriate cutting and bending. Do not predamage the capacitors and shorten their lifetime performance by incorrect handling.

1.3.2. SOLDERING

For recommended wave solder profile, please see additional solder instruction at section 2.5.

Improper soldering conditions may shrink or break the sleeve. Additionally, excessive heat can damage the internal capacitor element as terminals and lead wires conduct heat into the capacitor.

1.4. ALUMINUM ELECTROLYTIC CAPACITORS - SCREW TYPE -

1.4.1. MAINTENANCE

A regular inspection is recommended when screw capacitors are used at industrial applications. Before inspection, make sure to turn off the power, discharge screw capacitors carefully and do not apply mechanical force or pressure to the terminal to avoid damage. Inspection items are as stated below:

- Check on outer damage, deformation and electrolyte leakage
- Check electrical performance: leakage current, capacitance, DF value and other product specifications. If there is any abnormality detected, make sure a capacitor replacement will be done and handled properly

1.4.2. MOUNTING & INSTALLATION

Make sure capacitors rated capacitance, rated voltage and polarity is according to spec before installation. Please confirm that capacitors and circuit board terminal pitch is consistent to each other before installation. It may cause stress to internal capacitor element through the terminal. if the pitch is different, mounting was done nevertheless and strong mechanical stress was applied. In such case, this can cause short-circuit and other failure modes. Machine automated force torque strength must be controlled properly when mounting happens with automated machine.

1.4.3. MOUNTING DIRECTION OF SCREW TYPE CAPACITORS

To avoid screw capacitor breakage / explosion, it is not allowed to be mounted with the safety vent downwards to ground, because vent can't function properly when mounted with vent to bottom side and existing gas pressure cannot release properly. Recommended mounting method is shown as figure below, to avoid any safety vent downwards installation. So, capacitor should be mounted with screw terminals up as shown below:

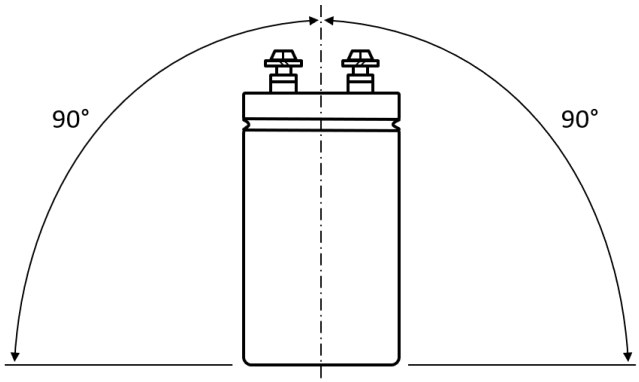

Recommended mounting direction

1.4.4. HORIZONTAL MOUNTING

For horizontal mounting following mounting is strongly recommended. Anode terminal in upper position with safety vent in horizontal position as figure below on left side or safety vent in upper position with anode and cathode terminal in horizontal as figure below on right side.

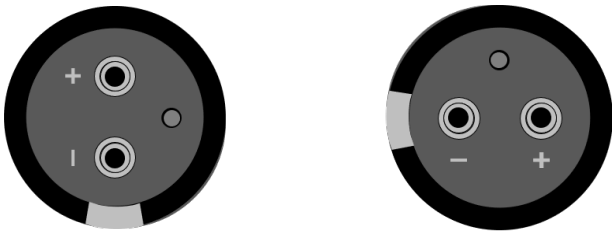

Recommended mounting position, also in accordance to EIAJ RCR-2367C

It may not damage capacitors directly, but an electrolyte leakage may happen, if installed by other mounting method in horizontal direction.

1.5. SOLID CONDUCTIVE POLYMER CAPACITORS

1.5.1. APPLICATION RESTRICTIONS

The leakage current of Solid Conductive Polymer Capacitors may vary which depends on thermal stress.

Please don't use Solid Conductive Polymer Capacitors in the following types of applications / circuits:

- High-impedance circuits - which are meant to sustain voltages
- Coupling circuits
- Time constant circuits - in addition to the leakage current fluctuation, capacitance may also fluctuate, which depends on operational temperature and humidity. The fluctuation of the capacitance may cause problems, if it is used as a time constant capacitor, which is extremely sensitive to the fluctuation of the capacitance. So, do not use it as a time constant capacitor.
- Other circuits - which are significantly affected by leakage current. If you want to use 2 or more capacitors in a series connection, please contact us before usage.

1.5.2. SUDDEN CHARGE AND DISCHARGE

Do not use the capacitor in circuits when capacitor is repetitively charged and discharged rapidly. If repetitively and rapid charging and discharging stresses the capacitor, it can result in reduction of capacitance or may cause further damage due to internal heating. The usage of a protective circuit is recommended to ensure reliability, when rush currents exceeds 10 times of capacitors allowed max. ripple current I_R, but never more than max. 10A. When measuring the leakage current, a protective resistor (1 kΩ) must be inserted to the circuit during the charge and discharge.

2. SOLDERING INSTRUCTIONS

In the following sections CapXon's leadfree solder profiles are stated in detail.

2.1. REFLOW SOLDERING ▪ SMD – ALUMINUM ELECTROLYTIC CAPACITORS

Recommended reflow soldering conditions

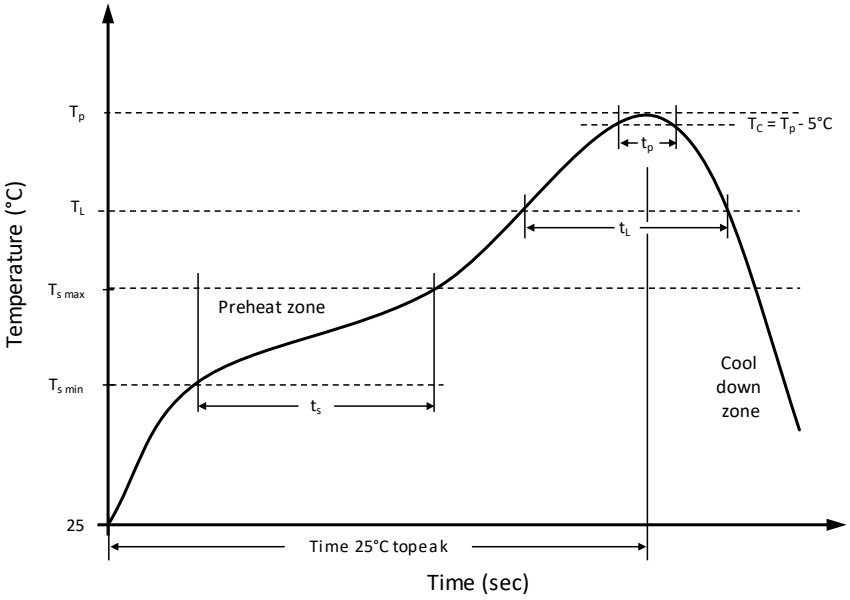

Classification of reflow soldering profile

Profile Features		Value
Preheat temperature min.	$T_{s\ min}$	150 °C
Preheat temperature max.	$T_{s\ max}$	180 °C
Preheat time t_s from $T_{s\ min}$ to $T_{s\ max}$	t_s	120 seconds
Ramp-up rate (T_L to T_p)		max. 3 °C/second
Liquidous temperature	T_L	217 °C
Time t_L maintained above T_L	t_L	See reference table below for Ø Diameter / Rated Voltage V_R combination
Peak package body temperature	T_p	See reference table below for Ø Diameter / Rated Voltage V_R combination
Timeframe of within 5°C below and up to max actual peak body temperature	t_p	See reference table below for Ø Diameter / Rated Voltage V_R combination
Ramp-down rate (T_L to T_p)		max. 6 °C/second
Time 25°C to peak temperature		max. 8 minutes

*** Limitations of ramp rates to JEDEC-J-STD020E**

Package classification reflow temperature for SMD – Aluminum Electrolytic Capacitors

Ø Diameter (mm)	V_R ▪ Rated Voltage (V)	t_L ▪ Time above 217°C	Time above 230°C	T_P Peak Temperature	t_p Timing (seconds)	Allowed Reflow Runs
4 up to 6.3	4 to 50	90 sec. max.	30 sec. max.	260 °C	10	max. twice
	63 to 100	60 sec. max.	30 sec. max.	255 °C	5	max. twice
8 up to 10	4 to 50	60 sec. max.	30 sec. max.	250 °C	5	max. twice
	63 to 450	40 sec. max.	30 sec. max.	240. °C	5	max. twice
12.5 up to 18	4 to 50	30 sec. max.	20 sec. max.	245 °C	5	max. twice
	63 to 450	20 sec. max.	5 sec. max.	235 °C	5	max. twice

2.2. REFLOW SOLDERING ▪ SMD – SOLID CONDUCTIVE POLYMER CAPACITORS

Recommended reflow soldering conditions

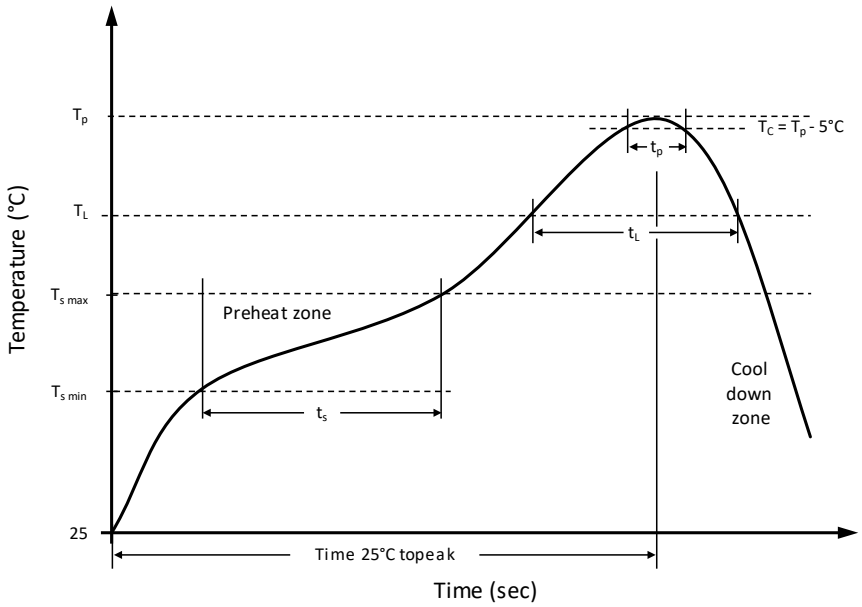

Classification of reflow soldering profile

Profile Features		Value
Preheat temperature min.	$T_{s\ min}$	150 °C
Preheat temperature max.	$T_{s\ max}$	180 °C
Preheat time t_s from $T_{s\ min}$ to $T_{s\ max}$	t_s	120 seconds
Ramp-up rate (T_L to T_p)		max. 3 °C/second
Liquidous temperature	T_L	217 °C
Time t_L maintained above T_L	t_L	60 ~ 150 seconds
Peak package body temperature	T_p	See reference table below for proper Rated Voltage V_R
Timeframe of within 5°C below (T_C) and up to max actual peak body temperature (T_P)	t_p	max. 20 seconds
Ramp-down rate (T_L to T_p)		max. 6 °C/second
Time 25°C to peak temperature		max. 8 minutes

*** Limitations of ramp rates to JEDEC-J-STD020E**

Package classification reflow temperature for SMD – Solid Conductive Polymer Capacitors

V_R ▪ Rated Voltage (V)	Time above 200°C	Time above 230°C	T_P Peak Temperature	Allowed Reflow Runs
2.5 up to 10	90 sec. max.	60 sec. max.	260 °C	only once
			250 °C	max. twice
16 up to 25	90 sec. max.	60 sec. max.	250 °C	only once
	80 sec. max.	50 sec. max.	240 °C	max. twice
35 up to 100	70 sec. max.	30 sec. max.	240 °C	only once

2.3. REFLOW SOLDERING ▪ SMD MLPC – SOLID POLYMER CONDUCTIVE CAPACITORS

Recommended reflow soldering conditions

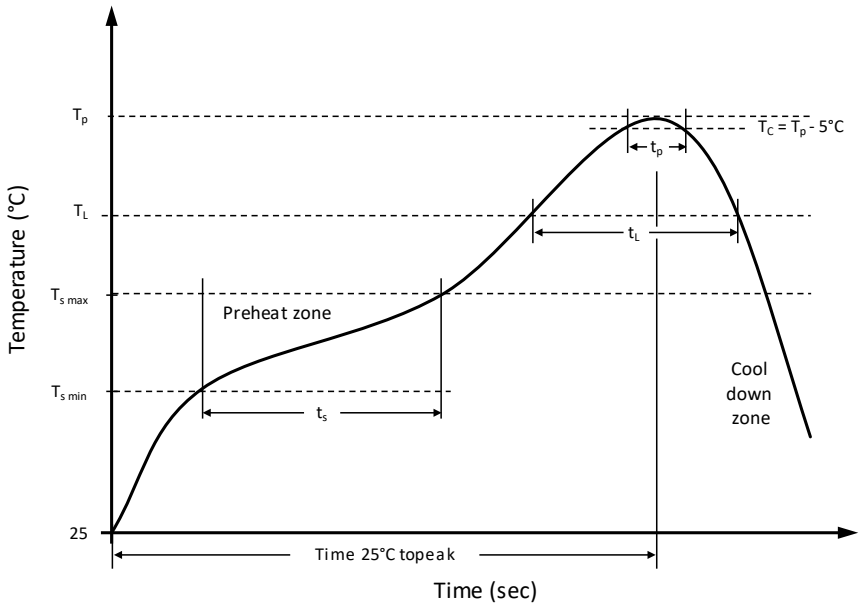

Classification of reflow soldering profile

Profile Features		Value
Preheat temperature min.	$T_{s\ min}$	150 °C
Preheat temperature max.	$T_{s\ max}$	200 °C
Preheat time t_s from $T_{s\ min}$ to $T_{s\ max}$	t_s	120 seconds
Ramp-up rate (T_L to T_p)		max. 3°C/second
Liquidous temperature	T_L	217 °C
Time t_L maintained above T_L	t_L	60 ~ 150 seconds
Peak package body temperature	T_p	See reference table below for proper Rated Voltage V_R
Timeframe of within 5°C below and up to max actual peak body temperature	t_p	max. 30 seconds
Ramp-down rate (T_L to T_p)		max. 6°C/second
Time 25°C to peak temperature		max. 8 minutes

*** Limitations of ramp rates to JEDEC-J-STD020E**

Package classification reflow temperature for SMD MLPC – Solid Conductive Polymer Capacitors

V_R ▪ Rated Voltage (V)	Time above 200°C	Time above 230°C	T_P ▪ Peak Temperature	Allowed Reflow Runs
2.5 up to 25	90 sec. max.	40 sec. max.	260°C max. 10sec.	max. twice
			250°C max. 10sec.	max. three times

2.4. REFLOW SOLDERING ▪ SMD – HYBRID CONDUCTIVE POLYMER CAPACITORS

Recommended reflow soldering conditions

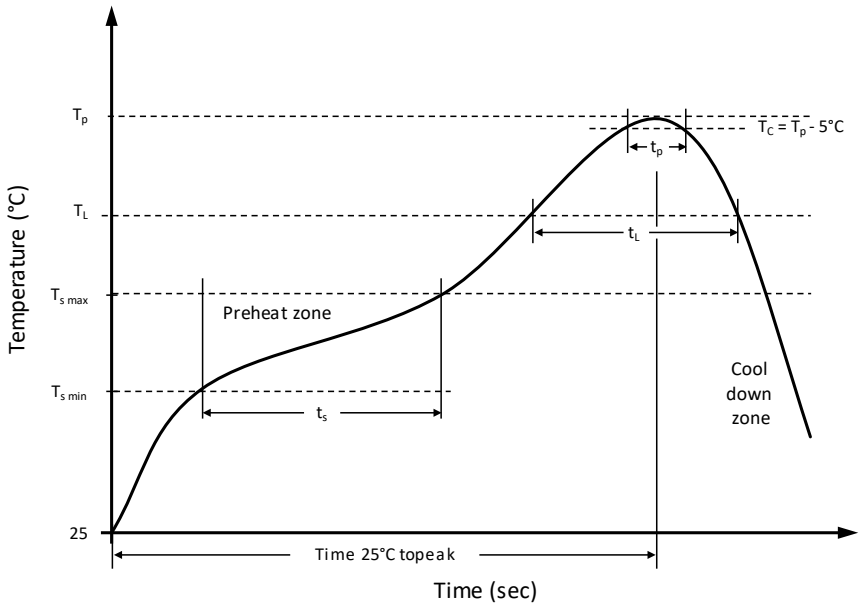

Classification of reflow soldering profile

Profile Features		Value
Preheat temperature min.	$T_{s\ min}$	160 °C
Preheat temperature max.	$T_{s\ max}$	200 °C
Preheat time t_s from $T_{s\ min}$ to $T_{s\ max}$	t_s	120 seconds
Ramp-up rate (T_L to T_p)		max. 3 °C/second
Liquidous temperature	T_L	217 °C
Time t_L maintained above T_L	t_L	See reference table below for proper Ø Diameter
Peak package body temperature	T_p	See reference table below for proper Ø Diameter
Timeframe of within 5°C below and up to max actual peak body temperature	t_p	See reference table below for proper Ø Diameter
Ramp-down rate (T_L to T_p)		max. 6 °C/second
Time 25°C to peak temperature		max. 8 minutes

*** Limitations of ramp rates to JEDEC-J-STD020E**

Package classification reflow temperature for SMD – Hybrid Conductive Polymer Capacitors

Ø Diameter (mm)	Time above 200°C	t_L Time above 217°C	Time above 230°C	T_P Peak Temperature (°C)	t_p Timing (seconds)	Allowed Reflow Runs
≤ 6.3	70 sec. max	40 sec. max.	30 sec. max.	260	5	max. twice
≥ 8	70 sec. max	40 sec. max.	30 sec. max.	245	10	max. twice
	70 sec. max	40 sec. max.	30 sec. max.	260	5	only once

For further information please contact sales@capxon.org

2.5. WAVE SOLDERING ▪ ALL RADIAL & SNAP-IN CAPACITORS

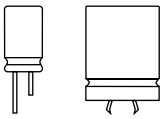

Recommended wave soldering conditions

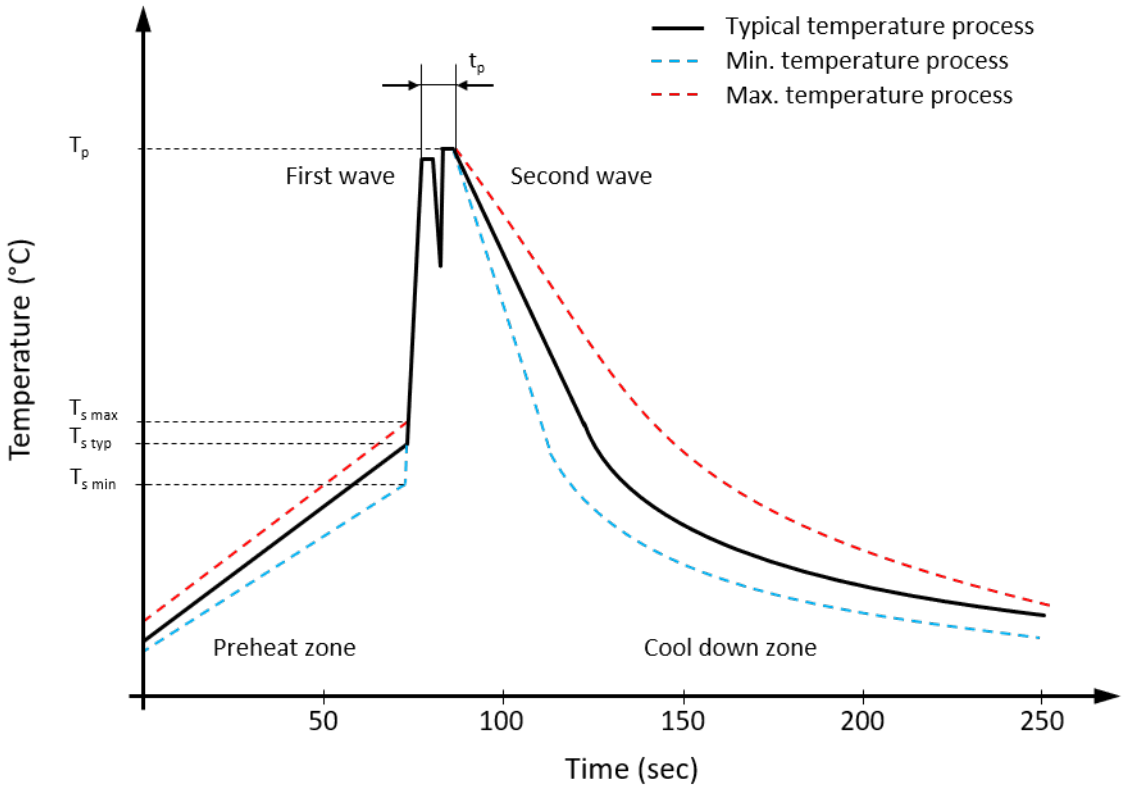

Classification wave soldering profile ▪ Refer to EN 61760-1: 2006

Profile Features		Value ▪ Pb-free Assembly	Value ▪ Sn-Pb Assembly
Preheat temperature min.	$T_{s\ min}$	100 °C	100 °C
Preheat temperature typical	$T_{s\ typ}$	120 °C	120 °C
Preheat temperature max.	$T_{s\ max}$	130 °C	130 °C
Preheat time t_s from $T_{s\ min}$ to $T_{s\ max}$	t_s	70 seconds	70 seconds
Peak temperature	T_p	245 °C ~ 260 °C	235 °C ~ 260 °C
Time of actual peak temperature	t_p	Max. 10 seconds Max. 5 second each wave	Max. 10 seconds Max. 5 second each wave
Ramp-down date min.		~ 2 °C/second	~ 2 °C/second
Ramp-down rate typical		~ 3.5 °C/second	~ 3.5 °C/second
Ramp-down rate max.		~ 5 °C/second	~ 5 °C/second
Time 25°C to 25°C		4 minutes	4 minutes

For further information please contact sales@capxon.org

For further information please contact sales@capxon.org

For further information please contact sales@capxon.org

CapXon

IATF 16949

AEC-Q200

ISO 9001

ISO 14001

QC 080000

www.capxongroup.com

Taiwan
CapXon Technology Limited Taiwan Branch
5F, No. 157, Datong Road, Sec. 2, XiZhi Dist.,
New Taipei City, 22183, Taiwan R. O. C.
+886-2-8692-6611
sales@capxon-taiwan.com

China
CapXon Electronic (Shen-Zhen) Co., Ltd.
Fengbin Industrial Park A102, Tangwei Community,
Fenghuang street, Guangming District, (No. 4132 Songbai Rd.)
Shenzhen 518106, China
+86-755-2717-7888
sales@capxon.com.cn

South Korea
CapXon Korea Office
RM309, Metrokhan, 239 Pyeongchon-daero, Dongan-gu,
Anyang-si, Gyeonggi-do, Korea, 14047
sales@capxon-korea.com

Southeast Asia
CapXon Singapore Office
51 Goldhill Plaza #07-10/11
Singapore 308900
+65-3-1572870
sales@capxon-asia.com

United States of America
CapXon US Office
New York +1-607-846 4546
sales@capxon-usa.com

Europe
CapXon Europe Office
Schwalbenweg 11
72793 Pfullingen, Germany
+49-7121-1452700
sales@capxon-europe.com

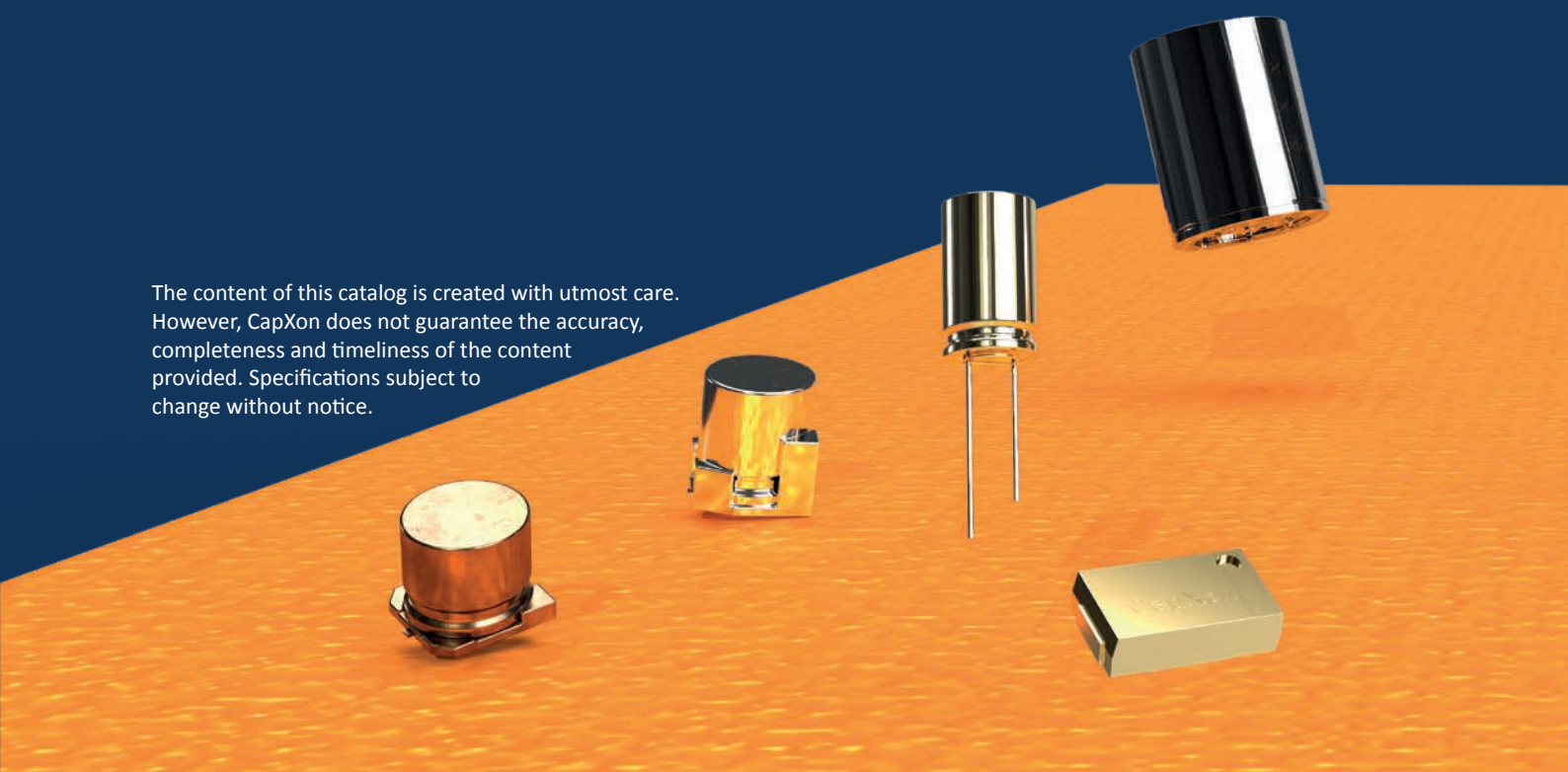

The content of this catalog is created with utmost care. However, CapXon does not guarantee the accuracy, completeness and timeliness of the content provided. Specifications subject to change without notice.